2026 Assessment Year | **City of Plymouth, Sheboygan County (2026 IMU)** | **Property Records**

ASSOCIATED APPRAISAL CONSULTANTS

Current Owner

HEIDI L HAACK

Districts

Sheboygan County	Sheboygan County
Plymouth	City of Plymouth
School	Plymouth Joint School District
Voc/Tech College	Lakeshore Technical College

General Information

Parcel Number:	59271828014
Alternate ID:	59271828014
Neighborhood:	521-Golf View Condo
Neighborhood Group:	500 - Condominium
Sanitary	Sewer
Traffic	Light
Water	Muni Water

Total Acreage:	0.00
Total Sq. Ft:	0
Actual Frontage:	
Effective Frontage:	0
Effective Depth:	0
Water Influence:	None
Water Desirability:	None

*Legal Description

GOLF VIEW CONDOMINIUM FIRST ADDENDUM - UNIT 2-2 AND AN UNDIV INT IN COMMON & LIMITED COMMON ELEMENTS AS SET FORTH IN DOC # 1663428 AND AMENDED BY #1815926

*This legal description may be abbreviated and is for assessment purposes only.

Section:	23	Township:	15	Range:	21E
Subdivision:		Block:		Lot / Unit:	

Inspection Data

Date	User	Type
2022-05-31		Exterior Inspection
2008-01-01		Full Inspection

Property Sales / Ownership History

Sale Date	Sale Price	Sale Typ	Validity	Document #	Deed Type	Grantor
3/27/2025	$307,250	IMPROVED	5 - Not a market sale	2177755	3 - Quit claim	THOMAS W. HAACK
3/27/2025	$307,250	IMPROVED	2 - Valid improved sale	2176461	2 - Condo	BERNICE L. CHISHOLM
6/17/2020	$96,950		5 - Not a market sale	2093749	1 - Warranty	Chisholm Mark C

Summary of 2026 Assessment Year Values

Tax Classification	Code	Acres	Land	Improvement	Total
Residential	1	0.000	$26,000	$258,500	$284,500
Total Real Estate - All Columns:		**0.000**	**$26,000**	**$258,500**	**$284,500**

Assessment Value History

Year	Code	Acres	Land	Improvement	Total
2025	1	0.000	$22,000	$193,900	$215,900
	Totals	**0.000**	$22,000	**$193,900**	$215,900
2024	1	0.000	$22,000	$193,900	$215,900
	Totals	**0.000**	$22,000	**$193,900**	$215,900
2023	1	0.000	$22,000	$193,900	$215,900
	Totals	**0.000**	$22,000	**$193,900**	$215,900

Special Tax Programs (MFL/PFC) and Exempt

Tax Classification	Code	Acres	Land	Improvement	Total

Permit Information

Issued Date	Number	Amount	Status	Purpose/Description

2026 Assessment Year | **City of Plymouth, Sheboygan County (2026 IMU)** | **Property Records**

Land Information

Land Line	Tax Classification	MAR Subclass	Acres	Sq. Ft.	Width	Depth	Unit of Measure	Units	Unit Rate	Land Value
1	Residential		0.000	0	0	0	Lot	1.000	26000.00	$26,000
Total All Columns:			**0.000**	**0**					**Total All Columns:**	**$26,000**

Other Building Improvements (OBI)

Bldg #	Tax Class	Style	Class/Const	Year Built	Grade	Condition	Width	Length	Height	Units	OBI Value
										Total Columns:	

2026 Assessment Year | **Building#: 1 - 1** | **Building ID: 2420** | **Building Value: 258,500** | **Property Records**



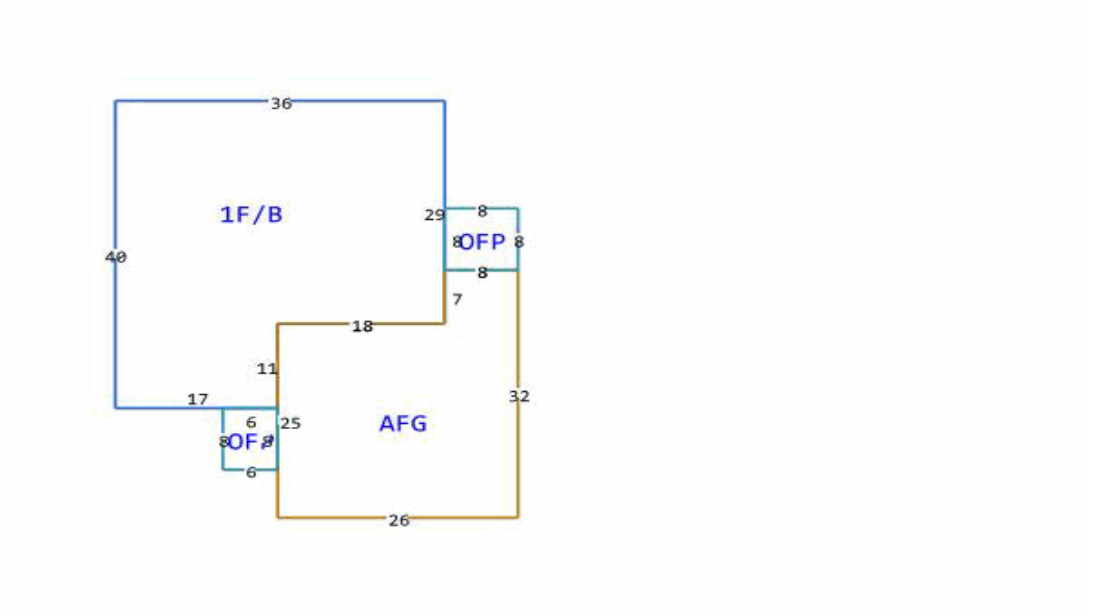

Building Data			
Tax Classification	Residential	Additional Fixtures	2
Building Number/Section	1 - 1	Hot Tub	0
Building Style	Garden Condo	Plumbing Rough In	0
Quality/Grade	C	Family Rooms	0
Year Built	2007	Other Rooms	3
Effective Year Built	2007	Masonry Fireplace Stacks	0
Class/Const	Frame	Masonry Fireplace Openings	0
Overall Condition (CDU)	Average	Masonry Additional Stories	0
Occupancy (Use)	Condominium	Metal Fireplace Stacks	0
Living/Apartment Units	0	Metal Fireplace Openings	0
Stories	1 story	Metal Additional Stories	0
Roof Type	Asphalt shingles	Gas Fireplace Openings	1
Basement Type	Not Specified	Equipment Rating	Average
Exterior Wall	Alum/vinyl	Kitchen Rating	Average
Masonry Adjustment SF	0	Bath Rating	Average
Shed Dormer LF	0	Interior Rating	Average
Gable Dormer LF	0	Exterior Rating	Average
Heating	Gas, forced air	Rec Room Rating	No Code
Air Conditioning	A/C (same ducts)		
Bedrooms	2		
Bath-Full	1		
Bath-Half	0		
Whirlpool	0		

Building Area					
Living Area	**Sq. Ft.**	**Other Area**	**Sq. Ft.**	**Attachment Area**	**Sq. Ft.**
First Floor Area	1,239	Unfinished Attic Area	0	Attached garage, frame	719
Second Floor Area	0	Unfinished Area	0	Open frame porch, first floor	112
Third Floor Area	0	Basement Area	1,239		
Half Floor Area	0	Crawlspace Area	0		
Finished Attic Area	0	Finished Basement Area (FBLA)	198		
		Rec Room Area	0		
Total Above Grade Living Area	**1,239**	**Total Sq. Ft. Living Area (SFLA)**	**1,437**		