2026 Assessment Year | **City of Sheboygan Falls, Sheboygan County (2026 Assessment Year)** | **Property Records**

ASSOCIATED APPRAISAL CONSULTANTS

Current Owner

JESSE SALAZAR

Districts

Sheboygan County	Sheboygan County
Sheboygan Falls	City of Sheboygan Falls
School	School 5278
Voc/Tech College	Vtech 1100

General Information

Parcel Number:	59282919866		
Alternate ID:	59282919866		
Neighborhood:	River Oaks & Alder Ct		
Neighborhood Group:	1980's Subdivisions		
Sanitary	Sewer		
Traffic	Light		
Water	City water		

Total Acreage:	0.32
Total Sq. Ft:	13,939
Actual Frontage:	
Effective Frontage:	116
Effective Depth:	125
Water Influence:	None
Water Desirability:	None

*Legal Description

RIVER OAKS ADDN.NO.2 LOT 117.

*This legal description may be abbreviated and is for assessment purposes only.

Section:		Township:		Range:	
Subdivision:		Block:		Lot / Unit:	

Inspection Data

Date	User	Type
2023-03-09		Exterior Inspection
2008-01-01		Full Inspection

Property Sales / Ownership History

Sale Date	Sale Price	Sale Typ	Validity	Document #	Deed Type	Grantor
12/16/2022	$350,000	IMPROVED	2 - Valid improved sale	2145623	1 - Warranty	Meyer Randall S
7/14/2022	$278,500		5 - Not a market sale	2139162	16 - Other (see comment)	Meyer Sharlene J

Summary of 2026 Assessment Year Values

Tax Classification	Code	Acres	Land	Improvement	Total
Residential	1	0.320	$60,000	$316,500	$376,500
Total Real Estate - All Columns:		**0.320**	**$60,000**	**$316,500**	**$376,500**

Assessment Value History

Year	Code	Acres	Land	Improvement	Total
2025	1	0.320	$60,000	$316,500	$376,500
	Totals	**0.320**	$60,000	**$316,500**	$376,500
2024	1	0.320	$60,000	$316,500	$376,500
	Totals	**0.320**	$60,000	**$316,500**	$376,500
2023	1	0.000	$48,000	$187,900	$235,900
	Totals	**0.000**	$48,000	**$187,900**	$235,900

Special Tax Programs (MFL/PFC) and Exempt

Tax Classification	Code	Acres	Land	Improvement	Total

Permit Information

Issued Date	Number	Amount	Status	Purpose/Description
2022-12-01		$ 16000	Completed	Replace Roof

2026 Assessment Year **City of Sheboygan Falls, Sheboygan County (2026 Assessment Year)** **Property Records**

Land Information

Land Line	Tax Classification	MAR Subclass	Acres	Sq. Ft.	Width	Depth	Unit of Measure	Units	Unit Rate	Land Value
1	Residential		0.320	13,939	116	125	Square Feet	13,939.000	4.29	$60,000
Total All Columns:			**0.320**	**13,939**					**Total All Columns:**	**$60,000**

Other Building Improvements (OBI)

Bldg #	Tax Class	Style	Class/Const	Year Built	Grade	Condition	Width	Length	Height	Units	OBI Value
										Total Columns:	

2026 Assessment Year | **Building#: 1 - 1** | **Building ID: 825** | **Building Value: 316,500** | **Property Records**

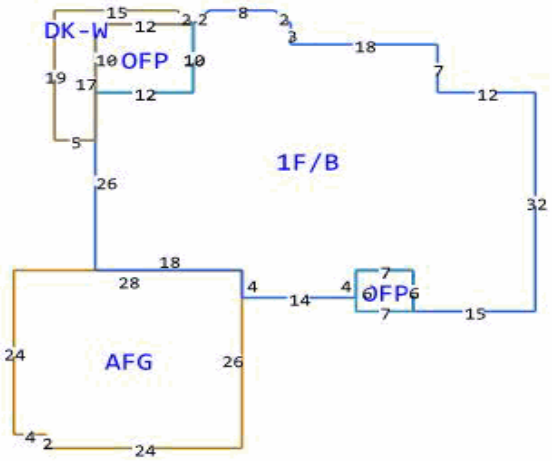

Building Data			
Tax Classification	Residential	Additional Fixtures	2
Building Number/Section	1 - 1	Hot Tub	0
Building Style	Ranch	Plumbing Rough In	0
Quality/Grade	C (+5%)	Family Rooms	0
Year Built	1997	Other Rooms	4
Effective Year Built	1997	Masonry Fireplace Stacks	0
Class/Const	Frame	Masonry Fireplace Openings	0
Overall Condition (CDU)	Average	Masonry Additional Stories	0
Occupancy (Use)	Single family	Metal Fireplace Stacks	1
Living/Apartment Units	1	Metal Fireplace Openings	1
Stories	1 story	Metal Additional Stories	0
Roof Type	Asphalt shingles	Gas Fireplace Openings	0
Basement Type	Not Specified	Equipment Rating	Average
Exterior Wall	Wood	Kitchen Rating	Average
Masonry Adjustment SF	175	Bath Rating	Average
Shed Dormer LF	0	Interior Rating	Average
Gable Dormer LF	0	Exterior Rating	Average
Heating	Gas, forced air	Rec Room Rating	No Code
Air Conditioning	A/C, same ducts		
Bedrooms	3		
Bath-Full	2		
Bath-Half	0		
Whirlpool	0		

Building Area					
Living Area	**Sq. Ft.**	**Other Area**	**Sq. Ft.**	**Attachment Area**	**Sq. Ft.**
First Floor Area	1,816	Unfinished Attic Area	0	Attached garage, frame	720
Second Floor Area	0	Unfinished Area	0	Deck, wood	117
Third Floor Area	0	Basement Area	1,816	Open frame porch, first floor	162
Half Floor Area	0	Crawlspace Area	0		
Finished Attic Area	0	Finished Basement Area (FBLA)	0		
		Rec Room Area	0		
Total Above Grade Living Area	**1,816**	**Total Sq. Ft. Living Area (SFLA)**	**1,816**		