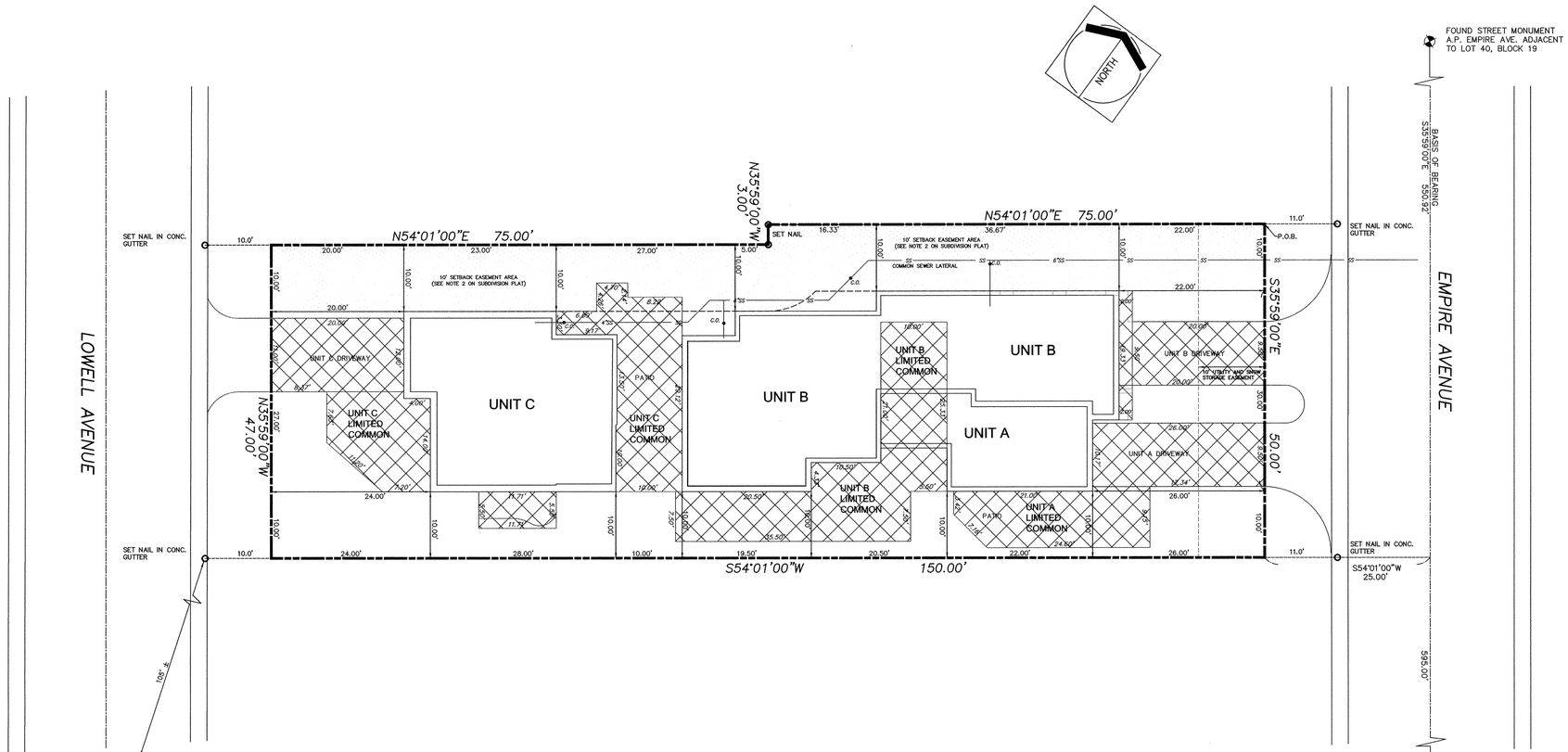

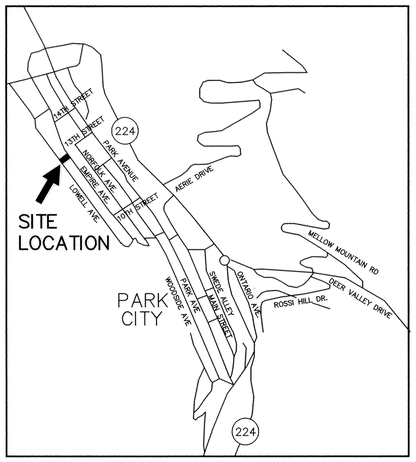

VICINITY MAP

NOTES:

1. Interior dimensions shown are to finished surfaces.
2. All structural elements are designated as common areas. (See additional Notes on sheet 3).
3. Refer to Declaration of Condominium for complete description of ownership.
4. All building ties to property line are perpendicular.
5. The address of Units A and B is 1243 Empire Avenue, Unit #___. The address of Unit C is 1240 Lowell Avenue.
6. Units A, B, and C of this Condominium Development are served by a common private wastewater line. The Residences at King's Crown Homeowners Association shall be responsible for ownership, operation, and maintenance of the common private wastewater line.

UNIT SQUARE FOOTAGE	
UNIT A	2147 sq. ft.
UNIT B	2886 sq. ft.
UNIT C	3234 sq. ft.

BOUNDARY DESCRIPTION

All of Lot B of the Walk To Slopes Plat–Phase II, recorded as Entry No. 595723 in the office of the Summit County Recorder, described on said Plat as follows:

Beginning at the northeasterly corner of Lot 6, Block 26, Snyder's Addition to the Park City Survey, according to the Official Plat thereof on file and of record in the office of the recorder, Summit County, Utah, said point also being on the southerly right–of–way line of Empire Avenue; and running thence South 54°01'00" West 150.00 feet to the northwesterly corner of Lot 39 and to a point on the northerly right–of–way line of Lowell Avenue; thence along the right–of–way line North 35°59'00" West 47.00 feet; thence North 54°01'00" East 75.00 feet; thence North 35°59'00" West 3.00 feet to the northwesterly corner of Lot 8; thence North 54°01'00" East 75.00 feet to the northeasterly corner of Lot 8 and to the southerly right–of–way line of Empire Avenue; thence along the right–of–way line South 35°59'00" East 50.00 feet to the point of beginning..

SURVEYOR'S CERTIFICATE:

I, Russell E. Campbell, do hereby certify that I am a Professional Land Surveyor and that I hold Certificate No. 316833 as prescribed under the laws of the State of Utah, and that I have caused to be made under my direct supervision and by the authority of the owner, this Record of Survey Map of THE RESIDENCES AT KING'S CROWN, a Utah Condominium Project, in accordance with the provisions of Section 57–8–13 of the Utah Condominium Ownership Act. I further certify that the building and property are shown correctly.

PROFESSIONAL LAND SURVEYOR — RUSSELL E. CAMPBELL — No. 316833 — STATE OF UTAH

Russell E. Campbell, L.S. 316833 — 12/26/06 Date

0 5 10 20 30
SCALE: 1"=10'

OWNER'S DEDICATION AND CONSENT TO RECORD

Know all men by these presents: That the undersigned Legacy Development Group, LLC, the owner of the tract of land described herein as The Residences at Kings Crown, a Utah Condominium Project located on said tract of land, has caused a survey to be made and this Record of Survey Map to be prepared does hereby give its consent to the recordation of the Record of Survey Map and submit this property to the Utah Condominium Ownership Act. Further, the owner does hereby irrevocably offer for dedication to Park City Municipal Corporation, the Synderville Basin Water Reclamation District, the Park City Fire Protection District, a non–exclusive easement over the utility easements, and snow storage easements shown on this plat for the purpose of providing access for utility installation, maintenance, use and eventual replacement, in accordance with an irrevocable offer of dedication. The owner further certifies all buildings will be built as shown.

In witness whereof, the undersigned has set its hand on this 3 day of January 2007, 2006.

LEGACY DEVELOPMENT GROUP, LLC,

By: _____
Sara K. Werbelow, Member

By: MICHAEL A. AND SONJA SALTMAN LIVING TRUST 1997, Member

By: _____
Michael A. Saltman, Trustee

By: _____
Sonja Saltman, Trustee

ACKNOWLEDGMENT

State of Utah
County of Summit

On the 3 day of January, 2007, 2006, personally appeared before me the undersigned Notary Public in and for the said State and County, Sara Werbelow, who after being duly sworn, acknowledged to me that he is the member of the Legacy Development Group, LLC, the owner of the herein described tract of land, and that the foregoing instrument was signed on the behalf of said corporation by authority of it's Articles of Organization or it's Operating Agreement.

Jamie Dooley
Notary Public

Residing at: 7815 Royal Street Park City, UT
My commission expires: 12/10/2009

NOTARY PUBLIC
JAMIE DOOLEY
7815 Royal St., PO Box 3203
Park City, Utah 84060
My Commission Expires
December 10, 2008
STATE OF UTAH

ACKNOWLEDGMENT

State of Utah
County of Summit

On the 3 day of January, 2007, 2006, personally appeared before me the undersigned Notary Public in and for the said State and County, Michael A. Saltman, who after being duly sworn, acknowledged to me that he is the Trustee of the Michael A. and Sonja Saltman Living Trust 1997, a member of the Legacy Development Group, LLC, the owner of the herein described tract of land, and that the foregoing instrument was signed on the behalf of said corporation by authority of it's Articles of Organization or it's Operating Agreement.

Jamie Dooley
Notary Public

Residing at: 7815 Royal Street Park City, UT
My commission expires: 12/10/2009

NOTARY PUBLIC
JAMIE DOOLEY
7815 Royal St., PO Box 3203
Park City, Utah 84060
My Commission Expires
December 10, 2008
STATE OF UTAH

ACKNOWLEDGMENT

State of Utah
County of Summit

On the 3 day of January, 2007, 2006, personally appeared before me the undersigned Notary Public in and for the said State and County, Sonja Saltman, who after being duly sworn, acknowledged to me that she is the Trustee of the Michael A. and Sonja Saltman Living Trust 1997, a member of the Legacy Development Group, LLC, the owner of the herein described tract of land, and that the foregoing instrument was signed on the behalf of said corporation by authority of it's Articles of Organization or it's Operating Agreement.

Jamie Dooley
Notary Public

Residing at: 7815 Royal Street Park City, UT
My commission expires: 12/10/2009

NOTARY PUBLIC
JAMIE DOOLEY
7815 Royal St., PO Box 3203
Park City, Utah 84060
My Commission Expires
December 10, 2008
STATE OF UTAH

RECORD OF SURVEY MAP

THE RESIDENCES AT KING'S CROWN CONDOMINIUM PLAT

A UTAH CONDOMINIUM PROJECT

LOCATED IN SECTION 16
TOWNSHIP 2 SOUTH, RANGE 4 EAST, SALT LAKE BASE AND MERIDIAN
PARK CITY, SUMMIT COUNTY, UTAH

SHEET
1 of 3

BASELINE SURVEYING, Inc
960 East Atkin Avenue
Salt Lake City, UT 84106 (801) 209–2152

CERTIFICATE OF ATTEST

I CERTIFY THIS RECORD OF SURVEY MAP WAS APPROVED BY PARK CITY COUNCIL THIS 9th DAY OF November 2006.

PARK CITY RECORDER

PLANNING COMMISSION

APPROVED AND ACCEPTED BY THE PARK CITY PLANNING COMMISSION THIS 25th DAY OF October 2006.

PLANNING COMMISSION CHAIRMAN

COUNCIL APPROVAL AND ACCEPTANCE

APPROVAL AND ACCEPTANCE BY THE PARK CITY COUNCIL THIS 9th DAY OF November, 2006.

MAYOR

CITY ENGINEER

I HEREBY CERTIFY THAT I HAVE HAD THIS PLAT REVIEWED BY THIS OFFICE AND IT IS CORRECT IN ACCORDANCE WITH AVAILABLE INFORMATION ON FILE IN THIS OFFICE.

JAN 12 2007
DATE

PARK CITY ENGINEER

SNYDERVILLE BASIN WATER RECLAMATION DISTRICT

REVIEWED FOR CONFORMANCE TO SNYDERVILLE BASIN WATER RECLAMATION DISTRICT STANDARDS THIS 4th DAY OF Jan., 2007.

S.B.W.R.D.

APPROVAL AS TO FORM

APPROVED AS TO FORM ON THIS 25th DAY OF January 2007.

PARK CITY ATTORNEY

RECORDED

803090
ENTRY NO. 803090 BOOK ___ PAGE ___
STATE OF UTAH COUNTY OF SUMMIT
DATE 1-26-07 TIME 11:43 A.M.
RECORDED AND FILED AT THE REQUEST OF:
Coalition Title
Fee $93.00
COUNTY RECORDER

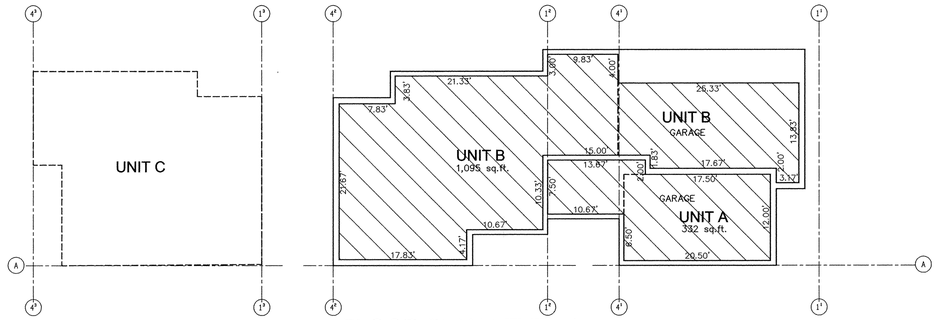

FLOOR PLAN LEVEL 1

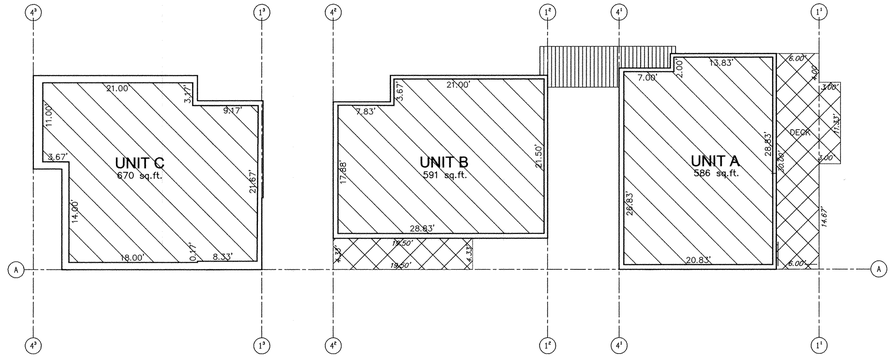

FLOOR PLAN LEVEL 2

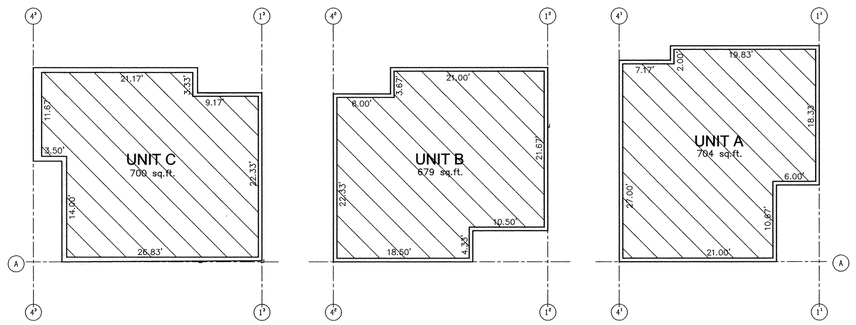

FLOOR PLAN LEVEL 3

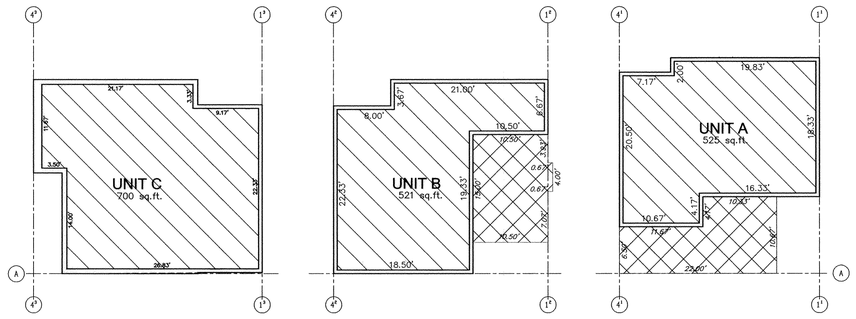

FLOOR PLAN LEVEL 4

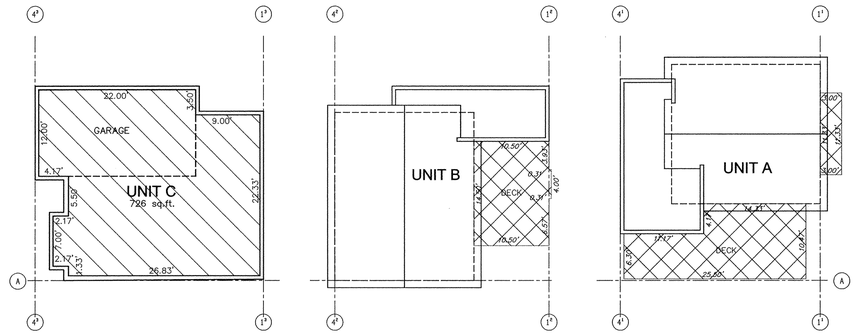

FLOOR PLAN LEVEL 5

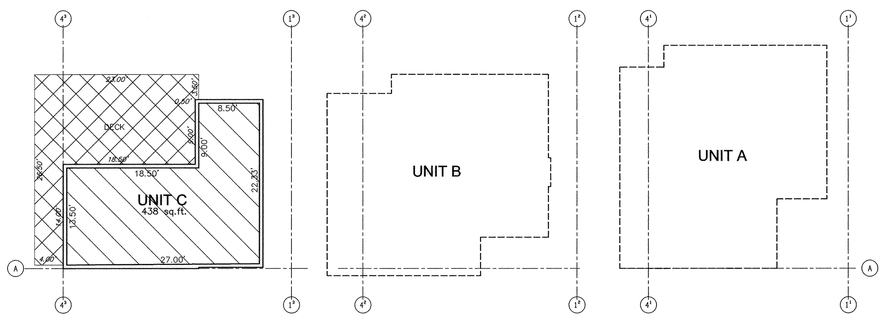

FLOOR PLAN LEVEL 6

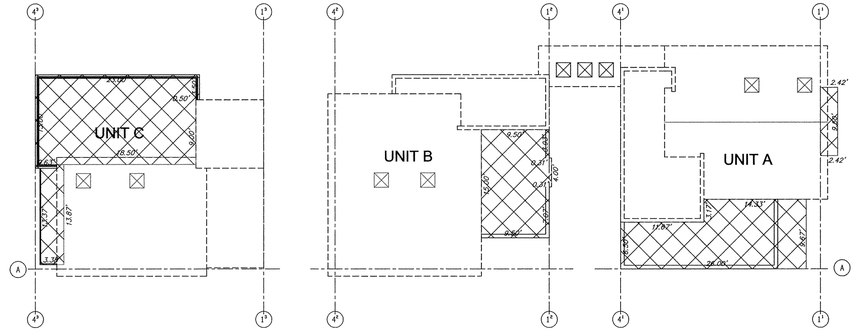

ROOF PLAN

LEGEND

PRIVATE OWNERSHIP

LIMITED COMMON AREA

COMMON AREA

UNIT SQUARE FOOTAGE	
UNIT A	2147 sq. ft.
UNIT B	2886 sq. ft.
UNIT C	3234 sq. ft.

0 5 10 20 30

SCALE: 1"=10'

THE RESIDENCES AT KING'S CROWN CONDOMINIUM PLAT

A UTAH CONDOMINIUM PROJECT

LOCATED IN SECTION 16
TOWNSHIP 2 SOUTH, RANGE 4 EAST, SALT LAKE BASE AND MERIDIAN
PARK CITY, SUMMIT COUNTY, UTAH

SHEET
2 of 3

BASELINE SURVEYING, Inc
960 East Atkin Avenue
Salt Lake City, UT 84106 (801) 209-2152

803090 RECORDED
ENTRY NO. 803090 BOOK — PAGE —
STATE OF UTAH COUNTY OF SUMMIT
DATE 1-26-07 TIME 11:43 AM
RECORDED AND FILED AT THE REQUEST OF:
Coalition Title
Fee $93.00 Daniel D. Bowers, Deputy
COUNTY RECORDER

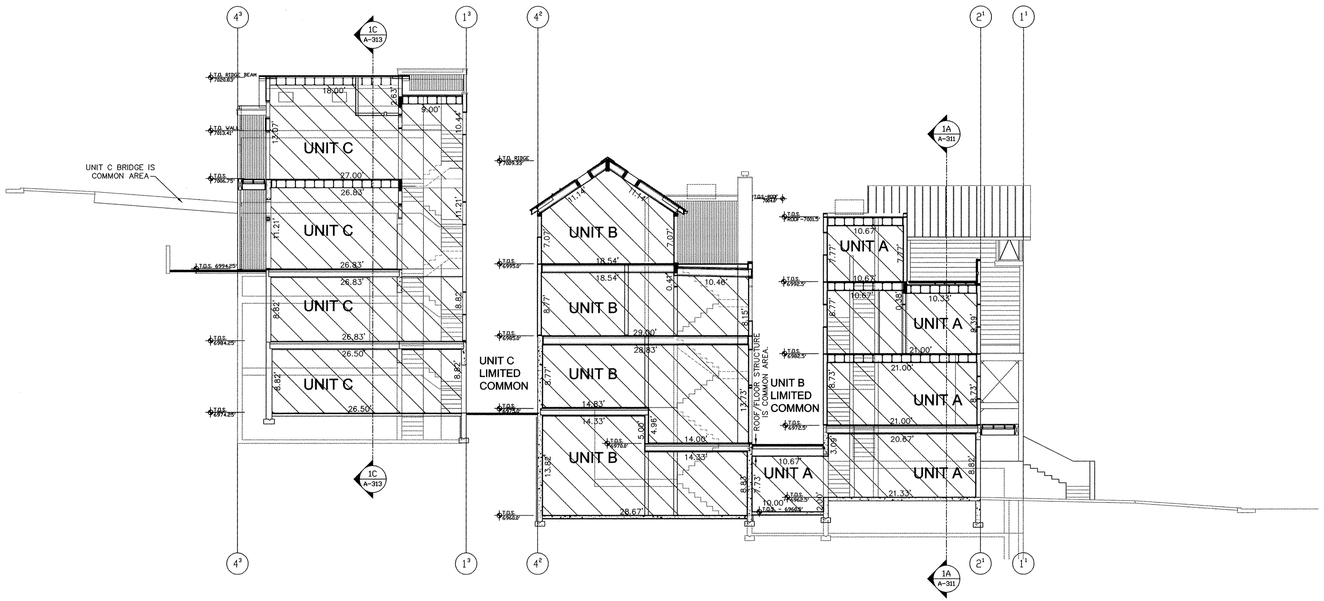

OVERALL SOUTH SITE SECTION

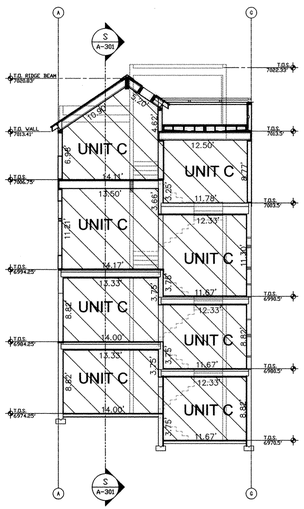

SECTION 1C

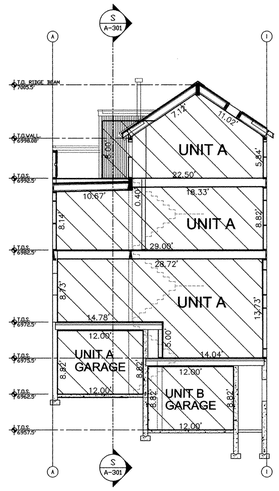

SECTION 1A

LEGEND

PRIVATE OWNERSHIP

LIMITED COMMON AREA

COMMON AREA

UNIT SQUARE FOOTAGE	
UNIT A	2147 sq. ft.
UNIT B	2886 sq. ft.
UNIT C	3234 sq. ft.

0 5 10 20 30

SCALE: 1"=10'

THE RESIDENCES AT KING'S CROWN CONDOMINIUM PLAT

A UTAH CONDOMINIUM PROJECT

LOCATED IN SECTION 16
TOWNSHIP 2 SOUTH, RANGE 4 EAST, SALT LAKE BASE AND MERIDIAN
PARK CITY, SUMMIT COUNTY, UTAH

SHEET
3 of 3

BASELINE SURVEYING, Inc
960 East Atkin Avenue
Salt Lake City, UT 84106
(801) 209-2152

803090 RECORDED
ENTRY NO. 803090 BOOK — PAGE —
STATE OF UTAH COUNTY OF SUMMIT
DATE 1-26-07 TIME 11:43 AM.
RECORDED AND FILED AT THE REQUEST OF:
Coalition Title
Fee $93.00
Jeanette Bowen, Deputy
COUNTY RECORDER