E-Mail lonehorndesign@Gmail.com Phone : (361)788-3046

Ryan & Danielle Kudelka

1252 County Road 388
Hallettsville Tx 77964

A0.0 - Cover Sheet
A1.1 - Foundation
A1.2 - Foundation Sections
A2.1 - Floor Plan
A2.2 - Floor Plan LVL 2
A2.3 - Floor Plan Layout
A3.1 - Sections
A3.2 - Sections
A4.1 - Ceiling LVL 1
A4.2 - Power-Water LVL 1
A4.3 - Ceiling-Power-Water LVL 2
A5.1 - Roof
A6.1 - Elevation
A6.2 - Elevation



Lone Horn Designs is a professional building designer, not Architects or Engineers. All the ideas, designs, and specifications contained in the drawings you have purchased belong to Lone Horn Designs. Your purchase of this plan is a conditional, single use to construct one project. The reproduction of these plans and designs is prohibited. Lone Horn Designs assumes no liability for changes that might be made by you. This plan requires a competent and experienced contractor and subcontractors to successfully construct this project. The contractor shall be responsible for all conditions on this project. Because these plans are generic in nature, they will have to be adapted to your local soil conditions, climate, building codes, zoning ordinances, deed restrictions and the present and future interpretations of the above. Although we allow for changes to this plan, it is not to be construed to be a license to repeat, copy, or reuse this plan. Lone Horn Designs are not soil, civil, or structural engineers. Any structural information shown on these plans should be reviewed by engineers in your area. You must maintain job site safety, including but not limited to, construction means, methods, techniques, sequences and procedures. Neither the professional activity of Lone Horn Designs, nor the presence of its employees and subconsultants at construction/project sites, shall relieve the contractor and any other entity of their obligations and responsibilities, including but not limited to, construction means, methods, techniques, sequences and procedures, and safety programs in connection with the project, and shall not be considered to give rise to any obligation or responsibility of Lone Horn Designs for any failure to perform or furnish the services in accordance with the contract documents or any applicable laws, codes, rules or regulations. Lone Horn Designs shall not have control over or charge of and shall not be responsible for acts or omissions of the contractor, subcontractors, or their agents or employees, or any other persons performing portions of the project. Lone Horn Designs shall not have control over or charge of and shall not be responsible for the acts or omissions of the owner or its agents or employees or any other persons performing any of the work or providing any of the services on behalf of the owner. Lone Horn Designs shall not have control over or charge of and shall not be responsible for any decision made regarding the construction contract requirements, or any application, interpretation, clarification, or modification of the construction contract documents other than those made by Lone Horn Designs or its consultants. Lone Horn Designs shall not be responsible for any failure of the contractor or any subcontractor to perform or furnish the work in accordance with the contract documents. Lone Horn Designs shall not be responsible for the failure of any contractor, subcontractor, vendor, or supplier to provide shop drawings or samples or to perform or furnish any work required by the contract documents. Lone Horn Designs shall not be responsible for any contractor's means, methods, techniques, sequences or procedures of construction, or the safety precautions and programs incident thereto. Lone Horn Designs shall not be responsible for the failure of any contractor to comply with any laws, rules, regulations, ordinances, codes, or orders applicable to the contractor's furnishing and performing of the work. Lone Horn Designs shall not be responsible for any contractor's failure to carry out the work in accordance with the contract documents. Lone Horn Designs shall not have control over, charge of, or be responsible for the acceptance or rejection of any contractor's work. Lone Horn Designs shall not be responsible for the construction means, methods, techniques, sequences or procedures, or the safety precautions and programs in connection with the work, since these are solely the contractor's responsibility. Lone Horn Designs shall not be responsible for the contractor's schedules or failure to carry out the work in accordance with the contract documents. Lone Horn Designs shall not be responsible for any substitutions of materials or equipment made by the contractor or for the use of any unauthorized substitutions. Lone Horn Designs shall not be responsible for any insurance provided or required by any contractor, subcontractor, vendor, or supplier, including adequacy or lack of coverage. Lone Horn Designs shall not be responsible for the failure of any contractor, subcontractor, vendor, or supplier to comply with any of the requirements of the contract documents. Lone Horn Designs shall not be responsible for any warranties or guarantees provided by any contractor, subcontractor, vendor, or supplier. Lone Horn Designs shall not be responsible for the failure of any contractor, subcontractor, vendor, or supplier to pay persons or entities furnishing labor or materials. Lone Horn Designs shall not be responsible for any contractor's failure to perform its work in accordance with the contract documents or in such a way that such performance will not cause interference with, disruption of, delay in, or hinder the progress or completion of the performance or work by Lone Horn Designs or any other contractor. Lone Horn Designs shall not be responsible for any claims, damages, losses, or expenses arising out of any act, omission, or fault of any contractor, subcontractor, vendor, or supplier, or any other person or entity performing any of the work, or anyone for whom they may be liable, on account of any act or omission of Lone Horn Designs or its consultants, agents or employees, or any other person or entity, but only to the extent caused by the foregoing parties' breach of contract, negligent performance of professional services under their contracts, or negligent or willful acts or omissions. We expect that only the latest, and most widely used, accepted industry standards, techniques, and materials will be used to construct this project. We insist that the performance of this structure be judged by knowledge that exists at the time of construction not by future knowledge that did not exist at this time. A great deal of time has been expended to create an accurate set of drawings to be used for the construction of your project. If problems or items required interpretation do arise contact us at the number provided for a resolution of the discrepancy. All final decisions on the structural stability of the building are up to the builder.

Designed By
Lone Horn Design
Owner: Herbert Coy

Phone: (361)788-3046
E-Mail: lonehorndesign@gmail.com

Project Owner
Ryan & Danielle Kudelka

Phone: (979) 616-0341
E-Mail: daniellelabay@gmail.com

Lone Horn Designs

Notes:

Rev 2
Changed Livingroom
Vault Direction And
Front Roof Entry

True North To Be Determined In Field

Page North

For Construction :

Date: 10-8-18

Ryan & Danielle Kudelka

1252 County Road 388
Hallettsville, Tx. 77964

Cover Sheet

Builder	
Date	2-2-2018
Drawn by	H. Coy
Rev:	2

A0.0

Scale

E-Mail lonehorndesign@Gmail.com Phone : (361)788-3046

Lone Horn Designs is a professional building designer, not Architects or Engineers. All the ideas, designs, and specifications contained in the drawings you have purchased belong to Lone Horn Designs. Your purchase of this plan is a conditional, single use to construct one project. The reproduction of these plans and designs is prohibited. Lone Horn Designs assumes no liability for changes that might be made by you. This plan requires a competent and experienced contractor and subcontractors to successfully construct this project. The contractor shall be responsible for all conditions on this project. Because these plans are generic in nature, they will have to be adapted to your local soil conditions, climate, building codes, zoning ordinances, deed restrictions and the present and future interpretations of the above. Although we allow for changes to this plan, it is not to be construed to be a license to repeat, copy, or reuse this plan. Lone Horn Designs are not soil, civil, or structural engineers. Any structural information shown on these plans should be reviewed by engineers in your area. Lone Horn Designs assumes no responsibility for construction means, methods, techniques, sequences and procedures, or for safety precautions and programs in connection with the construction. Lone Horn Designs assumes no responsibility for errors, omissions, inconsistencies, or ambiguities in these plans which may be discovered after the plans have been used to construct a project. We insist that the performance of this structure be judged by knowledge that exists at the time of construction not by future knowledge that did not exist at this time. A great deal of time has been expended to create an accurate set of drawings to be used for the construction of your project. If problems or items required interpretation do arise contact us at the number provided for a resolution of the discrepancy. All final decisions on the structural stability of the building are up to the builder.

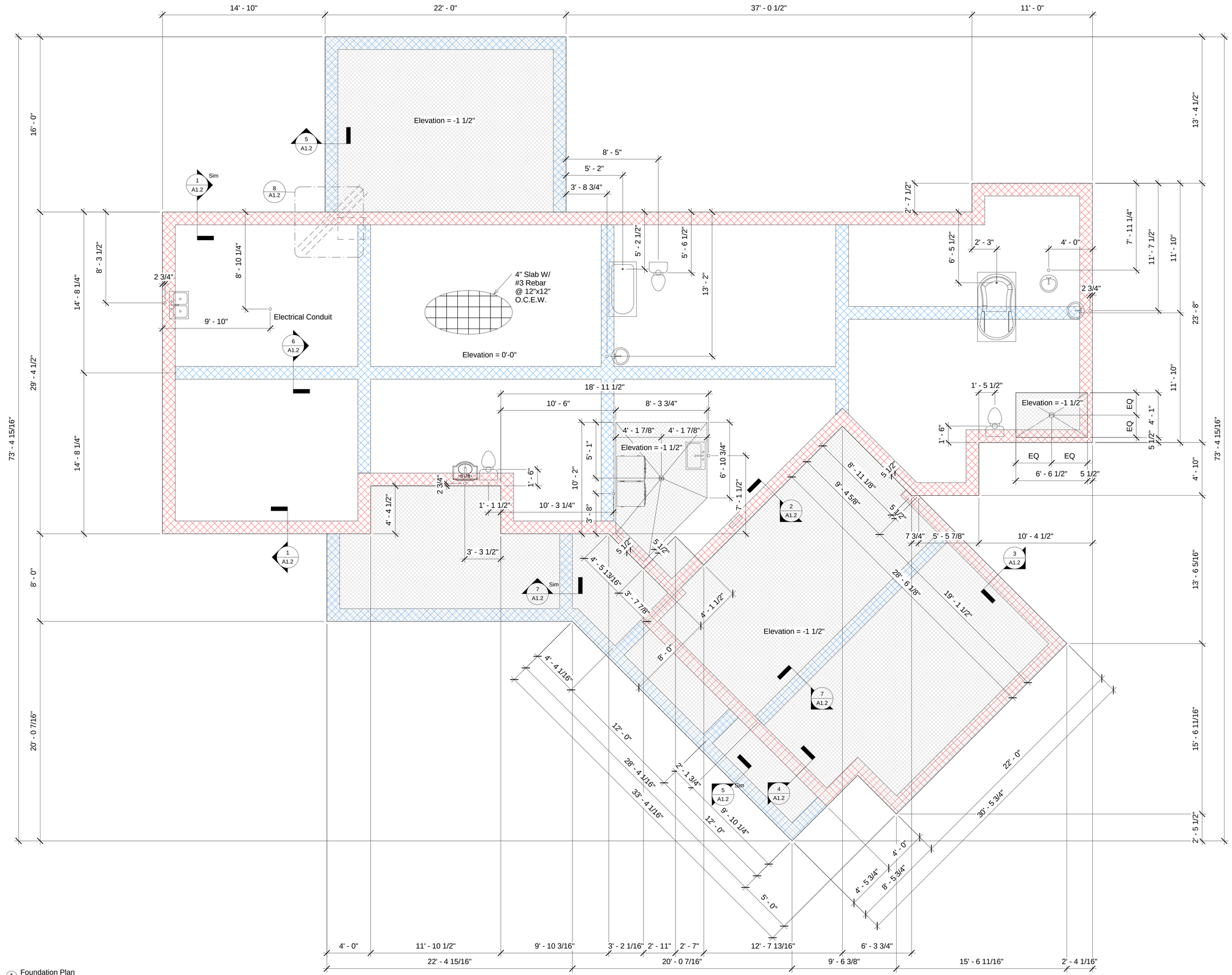

1 Foundation Plan
1/4" = 1'-0"

Lone Horn Designs

Notes:

Total Foundation = 3780SF

All Angles Are 90° or 45° Unless Noted

Rev 2
Changed Livingroom Vault Direction And Front Roof Entry

True North To Be Determined In Field

Page North

For Construction :

Date: 10-8-18

Ryan & Danielle Kudelka

1252 County Road 388
Hallettsville, Tx. 77964

Foundation

Builder	
Date	2-2-2018
Drawn by	H. Coy
Rev:	2

A1.1

Scale 1/4" = 1'-0"

E-Mail lonehorndesign@Gmail.com Phone : (361)788-3046

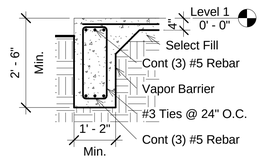

1 30" Exterior Beam (Red)
1/2" = 1'-0"

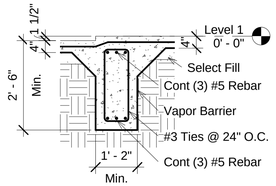

2 30" Interior Beam (Red)
1/2" = 1'-0"

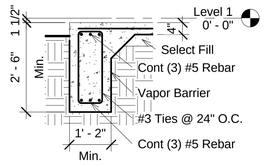

3 30" Exterior Beam -1 1/2" (Red)
1/2" = 1'-0"

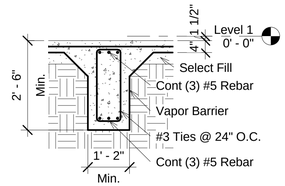

4 30" Interior Beam -1 1/2" (Red)
1/2" = 1'-0"

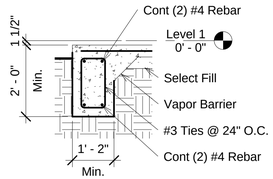

5 24" Exterior Beam (Blue)
1/2" = 1'-0"

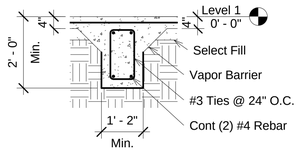

6 24" Interior Beam (Blue)
1/2" = 1'-0"

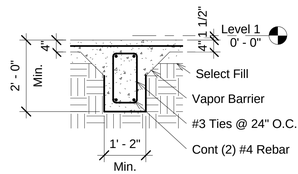

7 24" Interior Beam -1 1/2" (Blue)
1/2" = 1'-0"

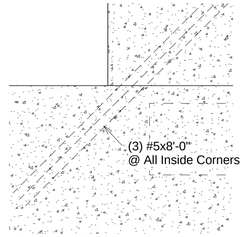

8 TYP Interior Foundation Corner
1/2" = 1'-0"

FOUNDATION NOTES:

1. CONCRETE SHALL HAVE A MIN. COMPRESSIVE STRENGTH OF 3000 PSI AT 28 DAYS AND SHALL HAVE AN APPROVED AIR ENTRAINMENT AGENT. FLY ASH MAY BE CONSIDERES AT THE DISCRETION OF THE ENGINEER IF AMBIENT TEMP AT THE TIME OF POUR ARE EXPECTED TO BE IN EXCESS OF 70'F
2. ALL REINFORCEMENT SHALL BE ASTM A-615, GRADE 60. THE SLABSHALL BE REINFORCED WITH #3 BARS 12 IN. OCEW IN ADDITION TO THE TOP BEAM OR CANTILEVER REINFORCEMENT SHOWN IN THE SECTIONS.
3. SUPPORT FOR THE BOTTOM BEAM REINFORCEMENT SHALL BE BY #3 STURRUPS AS INDICATED AND SPACED AT NOT MORE THAN 2'-0" O.C.
4. ALL SLAB REIENFORCEMENT SHALL BE SUPPORTED WITH CHAIRS OR MASONRY BRIQUETTES AT NOT MORE THAN 6'-0" O.C.
5. REINFORCING BARS WILL BE SECURED AT EVERY OTHER INTERSECTION.
6.LAPS AND SPLICES IN REINFORCING BARS WILL BE A MIN. OF 30 BAD DIAMETERS.
7. EXTERIOR BEAMS WILL BE AS SHOWN EXCEPT DEPTHS WILL BE INCRESED AS NECESSARY TO PENETRATE A MIN. OF 12" BELOW GROUND.
8. INTERIOR BEAMS MAY BE SHIFTED NOT MORE THAN 6" WHERE CONFLICTS WITH PLUMBING LAYOUTS OCCUR.
9. SLAB DROPS WILL REQUIRE THAT THE BEAM INTERSECTED BY THE DROP BE DEEPENED BY THE SAME AMOUNT.
10.THE ARE UNDERNEATH THE SLAB AND 5'-0" BEYOUND SHALL BE STRIPPED OF VEGETATION AND OTHER ORGANIC MATTER TO A MIN. DEPTH OF 6" BELOW GRADE.
11. ALL FILL PLACED BELOW THE FOUNDATION SLAB SHALL HAVE A MAX. PLASTICITY INDEX OF 20 OR LESS. THE MIN PLASTICITY SHALL BE 5. ALL FILL SHALL BE PLACED IN MAX LIFT THICKNESSES OF 6". EACH LIFT SHALL BE COMPACTED TO 95% OF STANDARD PROCTOR DENSITY (ASTM D-698) AT A MOISTURE CONTENT -1% to +3% OF OPTIMUM.
12. A 4" PERVIOUS SAND OR GRANULAR LAYER MAY BE PLACED UNDER THE SLAB.
13. A VAPOR RETARDER SHALL BE PLACED UNDER ALL CONCRETE SLAB. THE VAPOR RETARDER SHALL BE A MIN. OF 6 MIL. TEARS IN THE VAPOR RETARDER SHALL BE REPAIRED WITH APPROVED MASTIC OR MANUFACTURE TAPE. THE VAPOR RETARDER SHALL BE CONTINUED OVER THE OUTER EDGE AND TACKED TO FORM.
14. BEAM TRENCHES SHALL BE CLEANED OF DEBRIS AND STANDING WATER PRIOR TO POURNIG CONCRETE.
15. STRUCTURAL DRAWINGS TO BE COORDINATED WITH ALL DRAWINGS FOR ALL OPENINGS, INSERTS, AND RELATED ITEMS.
16. ALL FOUNDATION PLAN DIMENSIONS ARE INTERPRETED FROM AND SHALL BE VERIFIED WITH THE FLOOR PLAN. THE DESIGNER ASSUMES NO LIABILITY FOR DISCREPANCIES ONCE THE OWNER/PURCHASER OF THE PLANS TAKES POSSESSION OF SAID PLANS.
17. ANY UNUSUAL CONDITIONS ENCOUNTERED AFFECTING THE FOUNDATION SHALL BE BROUGHT TO THE ATTENTION OF THE OWNER AND THE DESIGNER PRIOR TO CONCRETE PLACEMENT.
18. FOUR CORNER BARS SHALL BE SECURELY TIED TO THE INTERSECTING BEAM BARS AT ALL EXTERIOR BEAM INTERSECTIONS. THE SHALL BE #5 BARS BENT TO A RIGHT ANGLE WITH 1'-6" LEGS.
19. BASED ON ACI 318, SECTIONS 7.2 & 7.3, ALL BARS SHALL BE COLD BENT WITH A MIN. INTERNAL BEND RADIUS OF 6 BAR DIAMETERS EXCEPT STIRRUPS AND TIES, WITCH SHALL BE GREATER THAN 4 BAR DIAMETERS IN REGARDS TO INTERNAL BEND RADIUS. BENDING SHALL NOT BE DONE IN FIELD U.N.O.
20. ALL BEAM STEEL SHALL HAVE A MIN. OF 2" OF CONCRETE COVERAGE IN ALL LOCATIONS.
21. THIS IS A SCHEMATIC FOUNDATION PLAN BASED ON THE GENERALLY ACCEPTED BUILDING PRACTICES IN THE STATE OF TEXAS. THE OWNER SHOULD CONSULT A REGISTERED ENGINEER LICENSED IN THE OWNERS STATE OF RESIDENCE TO OBTAIN STRUCTURAL PLANS APPROPRIATE TO THE PROPOSED BUILDING SITE.
22. THE DESIGNER FURTHER RECOMMENDS THAT THE OWNER OBTAIN A GEOTECHNICAL REPORT FROM A LICENSED PROFESSIONAL IN THE OWNER'S STATE BASED ON SITE CONDITIONS PRIOR TO STRUCTURAL DESIGN AND CONSTRUCTION.
23. PROVIDE TERMITE TREATMENT UNDERNEATH AND AROUND SLAB AS RECOMMENDED BY EXTERMINATOR OR COUNTY EXTENSION SERVICE.

0 1' 2' 4'

Lone Horn Designs

Notes:

Rev 2
Changed Livingroom Vault Direction And Front Roof Entry

True North To Be Determined In Field

Page North

For Construction :

Date: 10-8-18

Ryan & Danielle Kudelka

1252 County Road 388
Hallettsville, Tx. 77964

Foundation Sections

Builder

Date 2-2-2018

Drawn by H. Coy

Rev: 2

A1.2

Scale 1/2" = 1'-0"

Lone Horn Designs is a professional building designer, not Architects or Engineers. All the ideas, designs, and specifications contained in the drawings you have purchased belong to Lone Horn Designs. Your purchase of this plan is a conditional, single use to construct one project. The reproduction of these plans and designs is prohibited. Lone Horn Designs assumes no liability for changes that might be made by you. This plan requires a competent and experienced contractor and subcontractors to successfully construct this project. Because these plans are generic in nature, they will have to be adapted to your local soil conditions, climate, building codes, zoning ordinances, deed restrictions and the present and future interpretations of the above. Although we allow for changes to this plan, it is not to be construed to be a license to repeat, copy or reuse this plan. Lone Horn Designs is not responsible for any errors or omissions contained in your working drawings after they have been altered from our original plans. Lone Horn Designs will not be held liable for any omissions or construction errors. Structural and foundation information shown on these plans should be reviewed by engineers in your area. You are hereby notified that the performance of this structure be judged by knowledge that exists at the time of construction not by future knowledge that did not exist at this time. A great deal of time has been expended to create an accurate set of drawings to be used for the construction of your project. If problems or items required interpretation do arise contact us at the number provided for a resolution of the discrepancy. All final decisions on the structural stability of the building are up to the builder.

E-Mail lonehorndesign@Gmail.com Phone : (361)788-3046

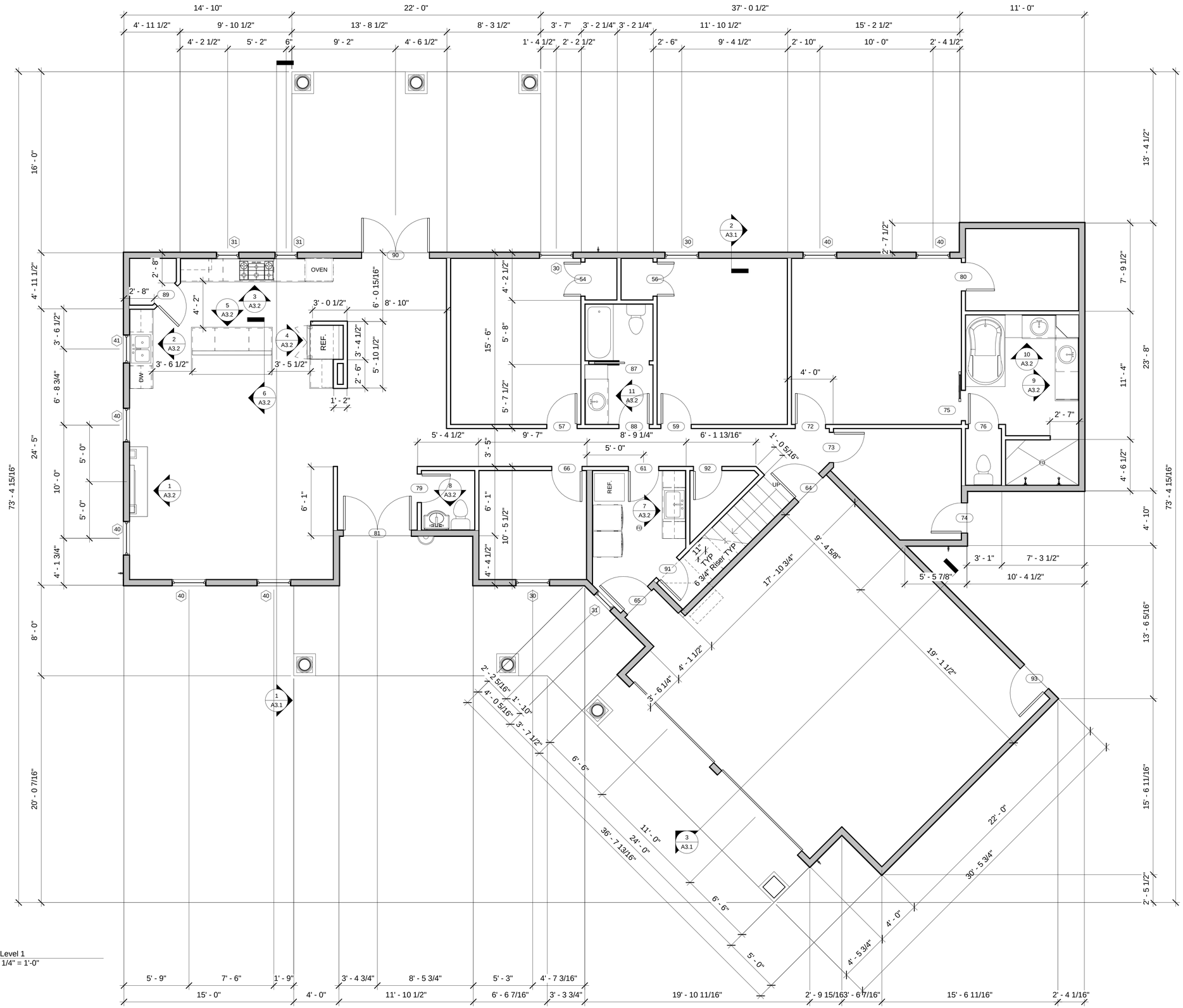

1 Level 1
1/4" = 1'-0"

Lone Horn Designs

Notes:

Dimensions Are To Face Of Stud

2x6 Stud Walls Are Shaded Grey

All Angles Are 90° or 45° Unless Noted

Living Space = 2294SF

Rev 2
Changed Livingroom Vault Direction And Front Roof Entry

True North To Be Determined In Field

Page North

For Construction :

Date: 10-8-18

Ryan & Danielle Kudelka

1252 County Road 388
Hallettsville, Tx. 77964

Floor Plan

Builder	
Date	2-2-2018
Drawn by	H. Coy
Rev:	2

A2.1

Scale 1/4" = 1'-0"

Lone Horn Designs is a professional building designer, not Architects or Engineers. All the ideas, designs, and specifications contained in the drawings you have purchased belong to Lone Horn Designs. Your purchase of this plan is a conditional, single use to construct one project. The reproduction of these plans and designs is prohibited. Lone Horn Designs assumes no liability for changes that might be made by you. This plan requires a competent and experienced contractor and subcontractors to successfully construct this project. The contractor shall be responsible for all conditions on this project. Because these plans are generic in nature, they will have to be adapted to your local soil conditions, climate, building codes, zoning ordinances, deed restrictions and the present and future interpretations of the above. Although we allow for changes to this plan, it is not to be construed to be a license to repeat, copy, or reuse this plan. Lone Horn Designs are not soil, civil, or structural engineers. Any structural information shown on these plans should be reviewed by engineers in your area, who are familiar with local conditions, construction techniques, and codes. The contractor and owner is solely responsible for any and all errors and omissions that have caused other problems, or are found to be flawed. We expect that only the latest, and most widely used, accepted industry standards, techniques, and materials will be used to construct this project. We insist that the performance of this structure be judged by knowledge that exists at the time of construction not by future knowledge that did not exist at this time. A great deal of time has been expended to create an accurate set of drawings to be used for the construction of your project. If problems or items required interpretation do arise contact us at the number provided for a resolution of the discrepancy. All final decisions on the structural stability of the building are up to the builder.

E-Mail lonehorndesign@Gmail.com Phone : (361)788-3046

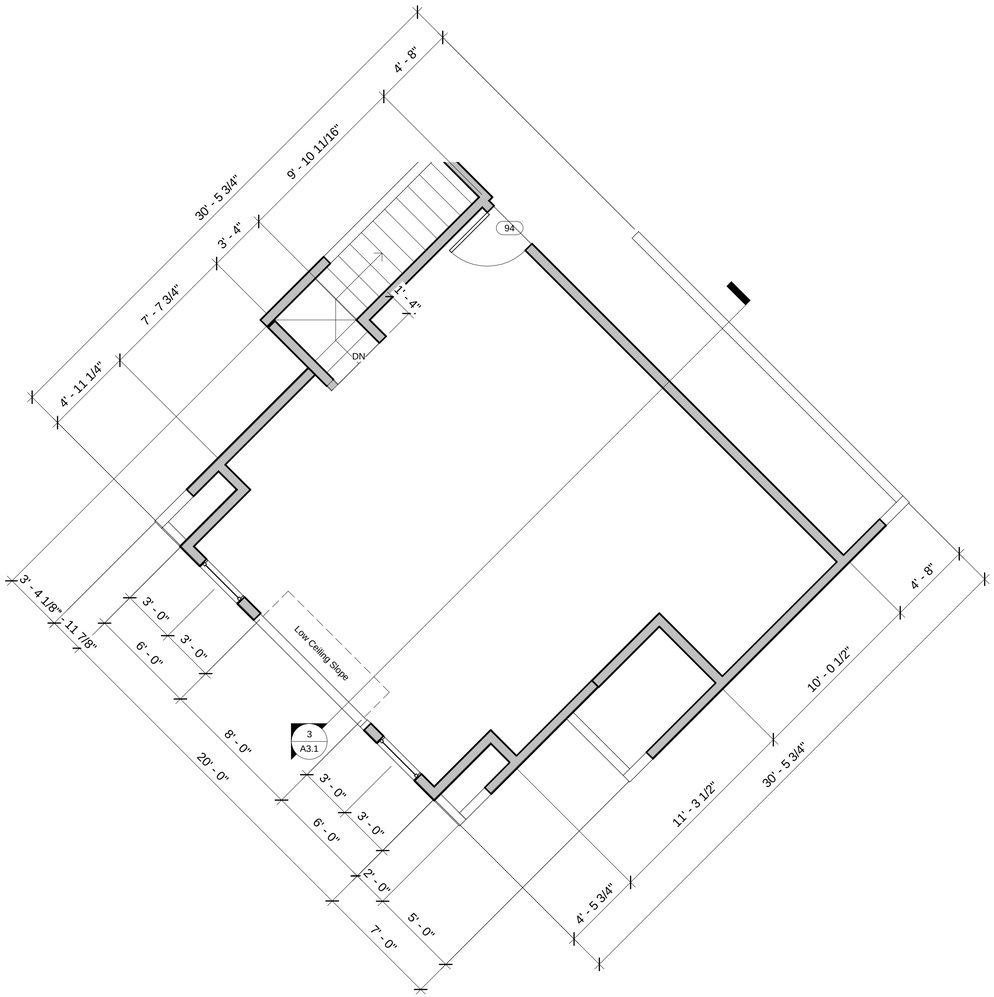

1 Level 2 Garage Space
1/4" = 1'-0"

0 2' 4' 8'

Lone Horn Designs

Notes:

Garage Deck Space = 647SF

Rev 2
Changed Livingroom Vault Direction And Front Roof Entry

True North To Be Determined In Field

Page North

For Construction :

Date: 10-8-18

Ryan & Danielle Kudelka

1252 County Road 388
Hallettsville, Tx. 77964

Floor Plan LVL 2

Builder	
Date	2-2-2018
Drawn by	H. Coy
Rev:	2

A2.2

Scale 1/4" = 1'-0"

Lone Horn Designs is a professional building designer, not Architects or Engineers. All the ideas, designs, and specifications contained in the drawings you have purchased belong to Lone Horn Designs. Your purchase of this plan is a conditional, single use to construct one project. The reproduction of these plans and designs is prohibited. Lone Horn Designs assumes no liability for changes that might be made by you. This plan requires a competent and experienced contractor and subcontractors to successfully construct this project. The contractor shall be responsible for all conditions on this project. Because these plans are generic in nature, they will have to be adapted to your local soil conditions, climate, building codes, zoning ordinances, deed restrictions and the present and future interpretations of the above. Although we allow for changes to this plan, it is not to be construed to be a license to repeat, copy or reuse this plan. Lone Horn Designs are not soil, civil, or structural engineers. Any structural information shown on these plans should be reviewed by engineers in your area, we recommend. Lone Horn Designs accepts no liability for errors and/or omissions. The performance of your foundation and structure is based on soil conditions. Lone Horn Designs is not responsible for soil conditions, construction means, structures and foundations. The contractor and/or owner is responsible for verifying all dimensions and conditions on the job site. We insist that the performance of this structure be judged by knowledge that exists at the time of construction not by future knowledge that did not exist at this time. A great deal of time has been expended to create an accurate set of drawings to be used for the construction of your project. If problems or items required interpretation do arise contact us at the number provided for a resolution of the discrepancy. All final decisions on the structural stability of the building are up to the builder.

E-Mail lonehorndesign@Gmail.com Phone : (361)788-3046

Room Schedule				
Number	Name	Level	Floor Finish	Area
1	Foyer	Level 1	Hard Wood - Laminate	40 SF
2	Living Room	Level 1	Hard Wood - Laminate	304 SF
3	Kitchen	Level 1	Hard Wood - Laminate	214 SF
4	Dining Room	Level 1	Hard Wood - Laminate	158 SF
5	Powder Room	Level 1	Tile	25 SF
6	Office	Level 1	Hard Wood - Laminate	91 SF
7	Laundry	Level 1	Tile	84 SF
8	Storage	Level 1	Hard Wood - Laminate	21 SF
9	Hallway	Level 1	Hard Wood - Laminate	123 SF
10	Master Bedroom	Level 1	Hard Wood - Laminate	220 SF
11	Master Bath	Level 1	Tile	125 SF
12	Master Closet	Level 1	Hard Wood - Laminate	72 SF
13	Bedroom 1	Level 1	Hard Wood - Laminate	169 SF
14	Closet 1	Level 1	Hard Wood - Laminate	10 SF
15	Bedroom 2	Level 1	Hard Wood - Laminate	169 SF
16	Closet 2	Level 1	Hard Wood - Laminate	10 SF
17	Bathroom	Level 1	Tile	64 SF
18	Dog Room	Level 1	Tile	94 SF
19	Stair Storage	Level 1	Concrete	44 SF
20	Garage Bonuse Room	Roof	Hard Wood - Laminate	593 SF
Grand total: 20				2630 SF

Door Schedule				
Description	Width	Height	Level	Mark
Interior Hollow Double Door	3' - 0"	6' - 8"	Level 1	54
Interior Hollow Double Door	3' - 0"	6' - 8"	Level 1	56
Interior Hollow Door	2' - 8"	6' - 8"	Level 1	57
Interior Hollow Door	2' - 8"	6' - 8"	Level 1	59
Interior Hollow Door	2' - 8"	6' - 8"	Level 1	61
Interior Hollow Door	3' - 0"	6' - 8"	Level 1	64
Exterior Solid Door	3' - 0"	6' - 8"	Level 1	65
Interior Hollow Door	2' - 8"	6' - 8"	Level 1	66
Interior Hollow Door	2' - 8"	6' - 8"	Level 1	72
Interior Hollow Door	2' - 8"	6' - 8"	Level 1	73
Exterior Solid Door	2' - 8"	6' - 8"	Level 1	74
Barn Door	2' - 8"	6' - 8"	Level 1	75
Interior Hollow Door	2' - 8"	6' - 8"	Level 1	76
Interior Hollow Door	2' - 6"	6' - 8"	Level 1	79
Interior Hollow Door	2' - 6"	6' - 8"	Level 1	80
Solid Front Door	6' - 0"	6' - 8"	Level 1	81
Garage Door	10' - 0"	7' - 0"	Level 1	84
Garage Door	10' - 0"	7' - 0"	Level 1	85
Pocket Door	2' - 8"	6' - 8"	Level 1	87
Interior Hollow Door	2' - 8"	6' - 8"	Level 1	88
Interior Hollow Door	2' - 6"	6' - 8"	Level 1	89
Exterior French Doors	6' - 0"	6' - 8"	Level 1	90
Interior Hollow Door	2' - 6"	6' - 8"	Level 1	91
Interior Hollow Door	2' - 6"	6' - 8"	Level 1	92
Exterior Solid Door	3' - 0"	6' - 8"	Level 1	93
Attic Access Door	3' - 0"	5' - 0"	Roof	94

Window Schedule					
Description	Sill Height	Width	Height	Level	Type Mark
Hung Double Pane	0' - 6"	3' - 0"	7' - 6"	Level 1	40
Hung Double Pane	0' - 6"	3' - 0"	7' - 6"	Level 1	40
Hung Double Pane	3' - 0"	3' - 0"	4' - 0"	Level 1	30
Hung Double Pane	3' - 0"	2' - 0"	4' - 0"	Level 1	31
Hung Double Pane	0' - 6"	3' - 0"	7' - 6"	Level 1	40
Hung Double Pane	0' - 6"	3' - 0"	7' - 6"	Level 1	40
Hung Double Pane	3' - 6"	2' - 6"	4' - 0"	Level 1	41
Hung Double Pane	3' - 6"	2' - 0"	4' - 0"	Level 1	31
Hung Double Pane	3' - 6"	2' - 0"	4' - 0"	Level 1	31
Hung Double Pane	0' - 6"	3' - 0"	7' - 6"	Level 1	40
Hung Double Pane	0' - 6"	3' - 0"	7' - 6"	Level 1	40
Hung Double Pane	3' - 0"	3' - 0"	4' - 0"	Level 1	30
Hung Double Pane	3' - 0"	3' - 0"	4' - 0"	Level 1	30
Hung Double Pane	3' - 0"	3' - 0"	4' - 0"	Roof	30
Hung Double Pane	3' - 0"	3' - 0"	4' - 0"	Roof	30

Roof Schedule	
Type	Area
Wood Rafter 6" - Asphalt Shingle	5379 SF

Ceiling Schedule	
Type	Area
Garage Ceiling	640 SF
Gypsum Ceiling	2744 SF
Hardie Ceiling	784 SF

Wall Schedule				
Type	Description	Length	Area	Estamated Stud Count
Exterior - Hardie on 2x6 Stud	Siding, Vapor Barrior, 1/2 Ply, Stud, Sheetrock	355' - 4 3/4"	2692 SF	321
Exterior - Hardie on 2x6 Stud (Gable)	Siding, Vapor Barrior, 1/2 Ply, Stud	178' - 9"	652 SF	166
Fireplace - Hardie on 2x4 Stud	Siding, Vapor Barrior, 1/2 Ply, Stud, Sheetrock	6' - 0 1/4"	22 SF	11
Fireplace - Stone on 2x4	Brick, Vapor Barrior, 1/2 Ply, Stud, Sheetrock	12' - 11 1/4"	13 SF	18
Interior - 2x4	Sheetrock, Stud, Sheetrock	295' - 11 1/2"	2039 SF	294
Interior - 2x6	Sheetrock, Stud, Sheetrock	124' - 5"	804 SF	125



1 Level 1 Layout
1/4" = 1'-0"



2 Level 2 Garage Space Layout
1/4" = 1'-0"

0 2' 4' 8'

Lone Horn Designs

Notes:

Room Schedule Does Not Count Wall Space. Living Space and Room Schedule Will Not Match.

Living Space = 2294SF

Garage Deck Space = 647SF

All Angles Are 90° or 45° Unless Noted

All Countertops Are to be Quartz

Rev 2
Changed Livingroom Vault Direction And Front Roof Entry

True North To Be Determined In Field

Page North

For Construction :

Date: 10-8-18

Ryan & Danielle Kudelka

1252 County Road 388
Hallettsville, Tx. 77964

Floor Plan Layout

Builder	
Date	2-2-2018
Drawn by	H. Coy
Rev:	2

A2.3

Scale 1/4" = 1'-0"

Lone Horn Designs is a professional building designer, not Architects or Engineers. All the ideas, designs, and specifications contained in the drawings you have purchased belong to Lone Horn Designs. Your purchase of this plan is a conditional, single use to construct one project. The reproduction of these plans and designs is prohibited. Lone Horn Designs assumes no liability for changes that might be made by you. This plan requires a competent and experienced contractor and subcontractors to successfully construct this project. The contractor shall be responsible for all conditions on this project. Because these plans are generic in nature, they will have to be adapted to your local soil conditions, climate, building codes, zoning ordinances, deed restrictions and the present and future interpretations of the above. Although we allow for changes to this plan, it is not to be construed to be a license to repeat, copy, or reuse this plan. Lone Horn Designs are not soil, civil, or structural engineers. Any structural information shown on these plans should be reviewed by engineers in your area who are familiar with local conditions, construction techniques, and practices. The performance of your structure is based upon these factors and if they are not addressed correctly, they have caused other problems, or are found to be flawed. We expect that only the latest, and most widely used, accepted industry standards, techniques, and materials will be used to construct this project. We insist that the performance of this structure be judged by knowledge that exists at the time of construction not by future knowledge that did not exist at this time. A great deal of time has been expended to create an accurate set of drawings to be used for the construction of your project. If problems or items required interpretation do arise contact us at the number provided for a resolution of the discrepancy. All final decisions on the structural stability of the building are up to the builder.

E-Mail lonehorndesign@Gmail.com Phone : (361)788-3046

1. Walls
A. 2x4 STUDS @ 16" O.C. (BLOCK MID SPANS GREATER THAN 9') U.O.N.
B. COLUMNS AND POSTS EXPOSED TO WEATHER MUST BE TREATED. R 323.
C. PROVIDE VERTICAL SUPPORT (SOLID) UNDER THE ENDS OF ALL BEAMS
D. ALL EXTERIOR WALLS AND MAIN CROSS STUD PARTITIONS SHALL BE BRACED AT EACH END AND BRACED ONCE EVERY 25' OF WALL. R 602.10.1-R 602.10.10
2. FLOORS
A. TRIPLE JOIST UNDER PARALLEL PARTITIONS
B. DECKING-16"-19" O.C. SUPPORTS 2X6 CENTER MATCH OR PLYWOOD SHEETS WITH GRAIN PERPINDICULAR TO SUPPORTS. BLOCK AT EDGES OR USE PLYWOOD CLIPS. (3/4" CDX 48/24).
C. CROSS BRIDGE SPANS OVER 10': AT ENDS OF JOISTS AND UNDER BEARING WALLS
3. ROOF
A. PROVIDE RAFTER TIES WHERE CEILING JOIST AND RAFTERS ARE NOT PARALLEL.
B. PROVIDE 2X8 CRIPPLE RAFTERS NAILED ALONG SIDE CONTINUOUS 2X6 RAFTER WHERE RAFTERS FORM BOTH A ROOF AND A CEILING.
C. BRACING
1. 2X6 COLLARS AND BRACES @ 48" O.C. (BRACES THAT EXCEED 6' ARE TO BE DOUBLED "T") BEARING ON STRONG BACKS OR ROOF BRACING BEAMS (DEPENDING ON THE JOIST DIRECTION) WHICH BEAR ON WALLS CONTINUOUS TO THE SLAB. NO PURLIN SHALL BE LESS THAN A RAFTER IT SUPPORTS.
2. SLOPE OF BRACES MUST NOT BE LESS THAN 45 DEGREES FROM THE HORIZONTAL. R 802.5.1
3. UNBRACED RAFTER SPAN MUST NOT EXCEED 8'. -R 802.5.1(1) - R 802.5.1(8)
4. PURLINS MUST BE CONTINUOUS AND MUST BE SUPPORTED BY BRACES TO BEARING WALLS.
D. DECKING -16" - 19.2" O.C. SUPPORTS PLYWOOD SHEETS WITH GRAIN PERPINDICULAR TO SUPPORTS: BLOCK AT EDGES OR USE PLYWOOD CLIPS (1/2" CDX 32/16) OR 7/16" WAFER BOARD.
E. 1/2" CDX PLYWOOD (WATER PROOFED) SHEATHING APPLIED TO WALLS AT CORNERS AND WHERE TOP PLATES ARE NOT CONTINUOUS (FLAT AND 90) AT CORNERS.
F. WHERE CEILING JOISTS AND RAFTERS ARE PERPENDICULAR APPLY STRONG BACKS PARALLEL TO RAFTERS ACROSS CEILING JOISTS ATTACH STRONGBACKS TO RAFTERS AT EACH END.
G. WHERE FLOOR OR CEILING JOIST HANGERS ARE USED- SQUARE JOIST ENDS TO INSURE FLAT BEARING.
4. EXTERIOR SIDING SHALL CONFORM TO TABLES R 702.1 (1). THROUGH R 703.5.2 AS TO MINIMUM THICKNESS FOR STUD SPACING. SEE TABLES 602.3(5) FOR SPACING AND 602.3.1 FOR SIZE.
5. MINIMUM BEARING AREA FOR STEEL LINTELS AT BRICK OPENINGS IS 4" OR 14 SQ. IN. (4' X 3 1/2") EACH SIDE. R 703.7.3
6. RAILS
A. HAND RAILS 34"-38" ABOVE THE NOSE OF TREAD CONTINUOUS THE FULL LENGTH OF THE STAIR, ON AT LEAST ONE SIDE OF STAIR. R311.5.6.1
B. BALCONY/GUARD RAILS 36" A.F.F. BALUSTRADES SPACED SO THAT A 4" SPHERE CANNOT PASS THROUGH THE RAILING AS PER SECTION R312. EXCEPTION: THE TRIANGULAR OPENINGS FORMED BY THE RISER, TREAD AND THE BOTTOM RAIL AT THE OPEN SIDE OF STAIRWAY ARE PERMITTED TO BE A 4 3/8" SPHERE.
7. STAIRS -5/8" F/C SHEET ROCK BELOW R 311.2.1
A. TREADS @ 10", R 311.5.3.2
B. RISERS @ 7 3/4" MAX. R 311.5.3.1
C. 6'-8" CLEAR HEADROOM FROM NOSE OF TREADS. R 311.5.2
D. STAIR WIDTH MAY NOT BE LESS THAN 3'-1" IN CLEAR. R 311.5.1
8. ANCHOR TIES- GALVANIZED, CORRUGATED, 1" WIDTH AND 22 GUAGE EVERY 24" HORIZONTAL AND 24" VERTICAL. R 703.7.4.1
9. ALL FASTENERS IN CONTACT WITH SLAB TO BE CORROSION RESISTANT AS PER SEC. R 401.1.1.
10. ANCHOR BOLTS 1/2" X 10" BOLT 7" INTO SLAB, 12" FROM CORNERS 6' APART/MINIMUM OF 2 PER WALL SECTION. R 403.1.6
11. HANDRAILS SHALL HAVE EITHER A CIRCULAR CROSS SECTION WITH A DIAMETER OF 1 1/4" TO 2", OR A NONCIRCULAR CROSS SECTION WITH A PERMITER DIMENSION OF AT LEAST 4" BUT NOT MORE THAN 6 1/4" AND A LARGEST CROSS SECTION DIMENSION NOT EXCEEDING 2 1/4". EDGES SHALL HAVE A MINIMUM RADIUS OF 1/8". R 311.5.6.3

1. 9' CEILINGS UNLESS NOTED
2. 6'-8" DOORS
3.
4. ALL OUTDOOR HOSE BIBBS MUST HAVE VACUUM BREAKERS, IRC. 2902
5. A/C DRAIN MUST GO TO A WORKING TRAP.
6. MUST PROVIDE DRAINAGE OF YOUR PROPERTY TO STREET.
7. N/A
8. SHEETROCK WALLS AND CEILINGS.
9. N/A
10. N/A
11.N/A
12. VERIFY ALL SIZES AND MULL CONFIGURATIONS FOR WINDOWS WITH OWNER, CARPENTER, PRIOR TO SALESMAN PLACING ORDER.
13. RECESS LIGHTS TO BE TIGHT INSULATION- RATED CEILING LIGHTS IRC 1102.1.10.
14. GFI 110 VOLT OUTLETS NEAR SINKS, IN GARAGE, AND ALL OUTSIDE WATER PROOF OUTLETS.
15. N/A
16. ALL GLAZING IN HAZARDOUS AREAS TO CONFIRM TO IRC 308.4 OR AN EXPOSED AREA OF PANE GREATER THAN 9 SQ. FT. BOTTOM 18" ABOVE FLOOR.
17. R 316 ALL INSULATION TO BE NOT MORE THAN 25 FLAME SPREAD AND A SMOKE DEVELOPMENT RATING OF NOT MORE THAN 450. UL STANDARD CLASS 1 OR 1101.3.
18. ALL EXHAUST FANS TO VENT OUTSIDE.
19. ALL PLUMBING VENTS TO VENT TO OUTSIDE OR HAVE AN ADMITTANCE VALVE IRC 3114.4.
20. R 310 ALL SLEEPING AREA WINDOWS TO HAVE A CLEAR OPENING OF 5.7 SQ. FT. MINIMUM, 20" WIDE AND 24" HIGH MINIMUM AND A SILL 44" MAXIMUM HEIGHT ABOVE FLOOR, IRC 310.1. IF THE BOTTOM OF AN OPERABLE WINDOW IS GREATER THAN 72" FROM GRADE THE SILL HEIGHT MUST BE GREATER THAN 24" FROM THE FLOOR.
21. N/A
22. N/A
23. IF GARAGE DOOR OPENERS ARE USED, PROVIDE LOW VOLTAGE FOR SHUT OFF AND REVERSE SENSORS AT EITHER SIDE OF DOOR.
24. FIRESTOPS.
A. MATERIAL SPEC. AS IRC 602.8
B. AT FURRED AREAS AND 10' INTERVALS ALONG WALLS AS PROVIDED IN IRC 602.8
C. AT VERTICAL AND HORIZONTAL INTERCONNECTING CONCEALED SPACE AS PROVIDED IN IRC 602.8
D. CONCEALED SPACE UNDER STAIRS AT TOP AND BOTTOM OF STRINGERS.
E. GAPS AROUND DUCTS AND PIPES MUST BE SEALED WITH APPROVED MATERIAL AT FLOOR AND CEILING LEVEL PENETRATIONS.
F. MATERIALS MAY BE 2X LUMBER, 1/2" GYP BOARD OR COMPRESSED GLASS FIBER, IRC 602.8.1
25. ALL GLASS LESS THAN 18" ABOVE THE FINISHED FLOOR AND WITHIN 24" OF A DOOR SWING OR WITHIN 60" OF FLOOR MUST BE TEMPERED, IRC 308.4.
26. IN ACCORDANCE TO ELECTRICAL SERVICE STANDARDS... ALL ACCESS TO ELECTRICAL METERS SHALL NOT BE BLOCKED BY FENCES, GATES, OR WALLS.
27. FLASHING AND COUNTER FLASHING AT ALL EXTERIOR OPENINGS WHEN METAL IS USED SHALL BE 26 GUAGE GALVANIZED.
28. ONE REQUIRED EXIT DOOR TO EXTERIOR 3' HINGED DOOR MINIMUM. ALL EXIT DOORS REQUIRE KEYLESS OPERATIONS FROM THE INTERIOR.
29. STREET ADDRESS NUMBERS MUST BE LEGIBLE FROM STREET AND WITHIN 12' OF THE FRONT DOOR.
30.N/A
31. GARAGE WALLS AND CEILING COMMON TO HOUSE TO BE COVERED WITH 5/8" GYP... MINIMUM, IRC 309.2
32. HANDRAIL GRASPABLE RAIL REQUIRED IF 2 OR MORE RISERS RAILING HEIGHT MINIMIM 34" OR 38" MAXIMUM ABOVE NOSE OF STEPS. GRIPS MUST BE 1 1/4" - 2 5/8" CIRCULAR CROSS SECTION, MAXIMUM ABOVE PROJECTION INTO STAIRWAY 4 1/2". ALL ENDS SHALL RETURN TO WALL OR NEWELL POST. IRC 315.1
33. PROVIDE VENT BLOCKS IN MASONRY.

BATH NOTES
1. N/A
2. TILE FULL IN SHOWER EXCEPT WHERE SAFETY GLASS IS SHOWN. TILE TO 7' ABOVE TUBS.
3. PROVIDE GREEN BOARD (WATERPROOF SHEETROCK) BEHIND TILE AND ALL TUBS AND SHOWERS.
4. GLAZING IN SHOWER AND BATH TUB DOORS AND ENCLOSURES SHALL BE IMPACT RESISTANT AND PASS REST REQUIREMENTS OF PART 1 OF IRC. STANDARD CPSC 16 CFR, PART 1201. HINGED SHOWER DOORS SHALL SWING OUTWARD 2708.1 IRC.
5. GFI 110 VOLT OUTLETS @ VANITIES
6. ALL BATHROOM FANS SHALL HAVE A MINIMUM VENTILATION OF 50 CFM CONTINUOUS WITH EXHAUST DIRECTLY TO OUTSIDE.

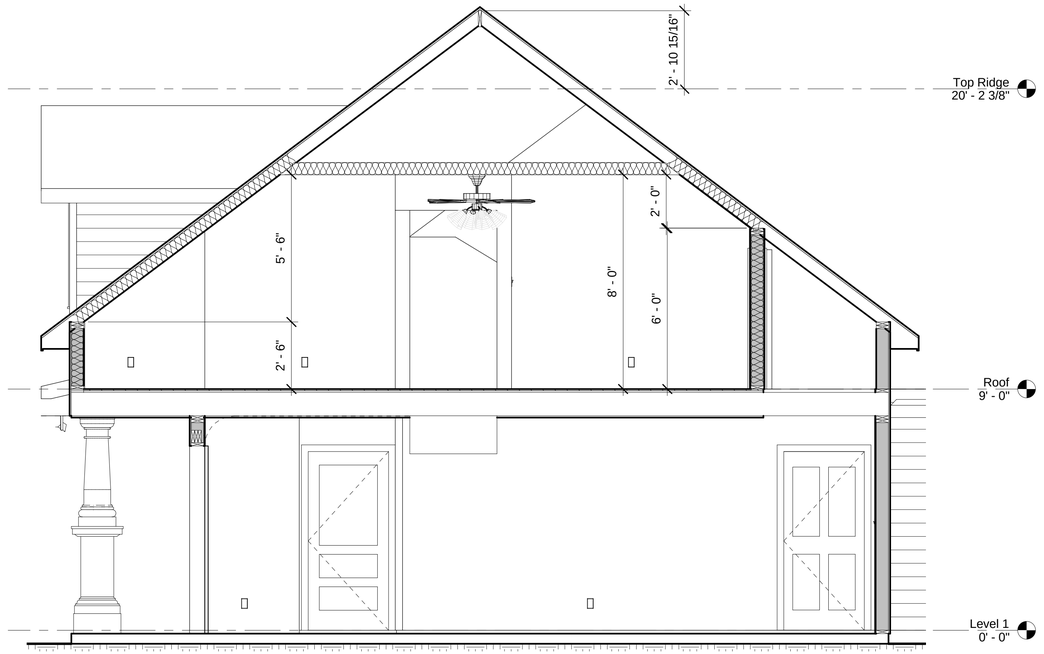

3 Garage Section
3/8" = 1'-0"

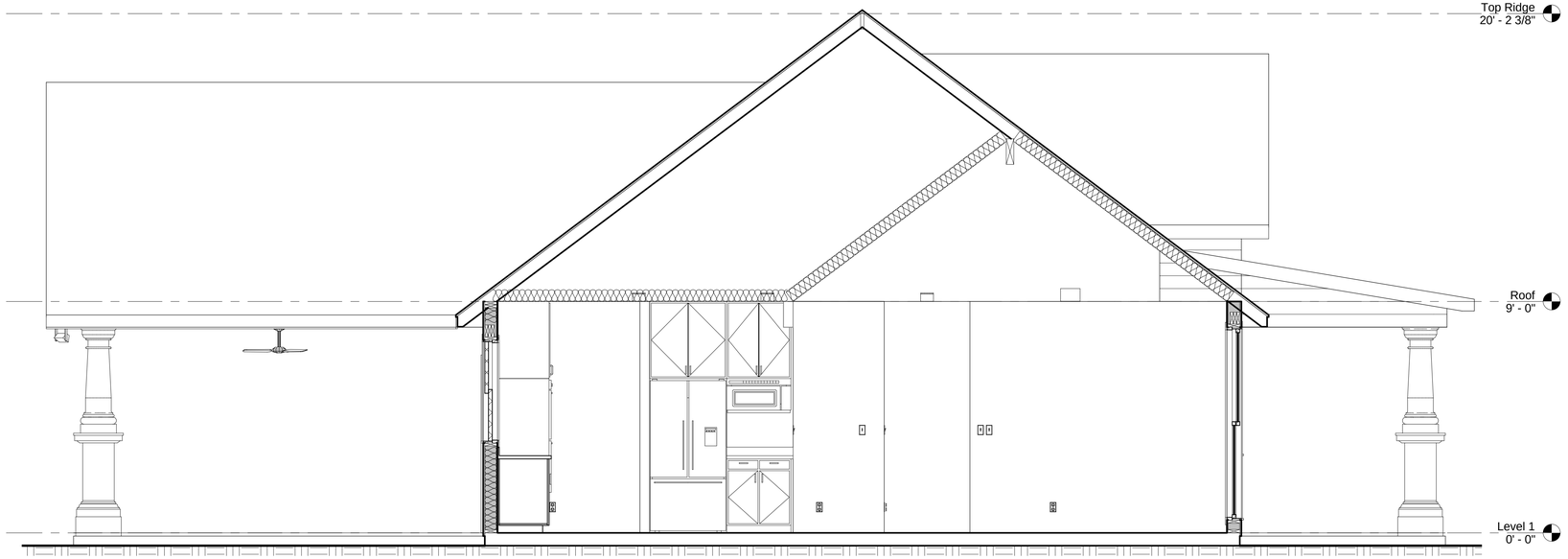

1 House Section
3/8" = 1'-0"

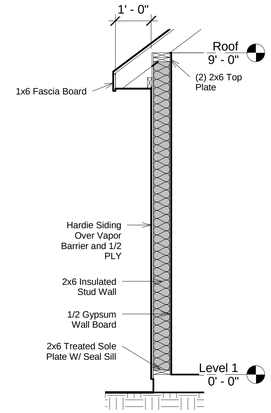

2 TYP Exterior Wall
1/2" = 1'-0"



Lone Horn Designs

Notes:

Rev 2
Changed Livingroom Vault Direction And Front Roof Entry

True North To Be Determined In Field

Page North

For Construction :

Date: 10-8-18

Ryan & Danielle Kudelka

1252 County Road 388
Hallettsville, Tx. 77964

Sections

Builder	
Date	2-2-2018
Drawn by	H. Coy
Rev:	2

A3.1

Scale As indicated

Lone Horn Designs is a professional building designer, not Architects or Engineers. All the ideas, designs, and specifications contained in the drawings you have purchased belong to Lone Horn Designs. Your purchase of this plan is a conditional, single use to construct one project. The reproduction of these plans and designs is prohibited. Lone Horn Designs assumes no liability for changes that might be made by you. This plan requires a competent and experienced contractor and subcontractors to successfully construct this project. The contractor shall be responsible for all conditions on this project. Because these plans are generic in nature, they will have to be adapted to your local soil conditions, climate, building codes, zoning ordinances, deed restrictions and the present and future interpretations of the above. Although we allow for changes to this plan, it is not to be construed to be a license to repeat, copy, or reuse this plan. Lone Horn Designs are not soil, civil, or structural engineers. Any structural information shown on these plans should be reviewed by engineers in your area who have knowledge of local conditions, construction practices, and building codes. The homeowner and builder assume the responsibility for any errors or omissions that have caused other problems, or are found to be flawed. We expect that only the latest, and most widely used, accepted industry standards, techniques, and materials will be used to construct this project. We insist that the performance of this structure be judged by knowledge that exists at the time of construction not by future knowledge that did not exist at this time. A great deal of time has been expended to create an accurate set of drawings to be used for the construction of your project. If problems or items required interpretation do arise contact us at the number provided for a resolution of the discrepancy. All final decisions on the structural stability of the building are up to the builder.

E-Mail lonehorndesign@Gmail.com Phone : (361)788-3046

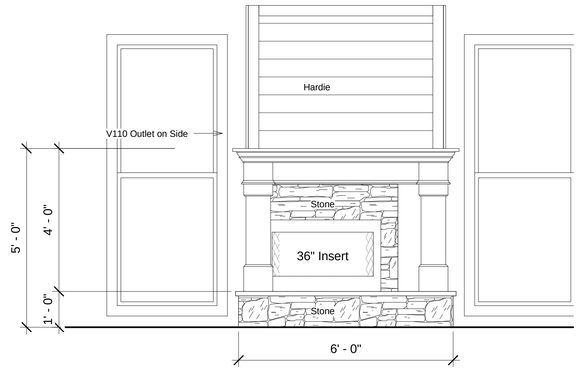

1 Fireplace
1/2" = 1'-0"

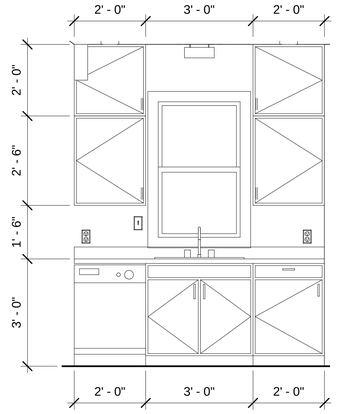

2 Kitchen Sink
1/2" = 1'-0"

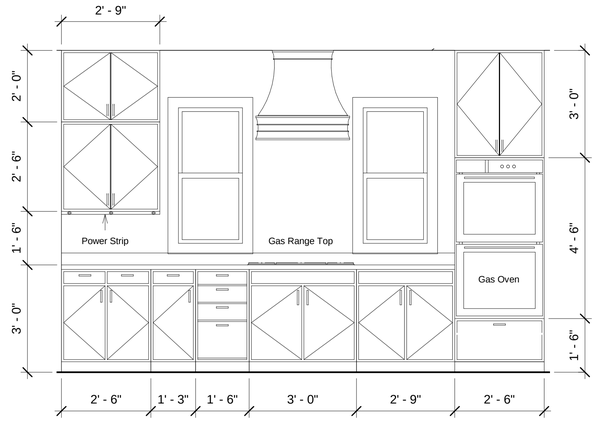

3 Kitchen Range
1/2" = 1'-0"

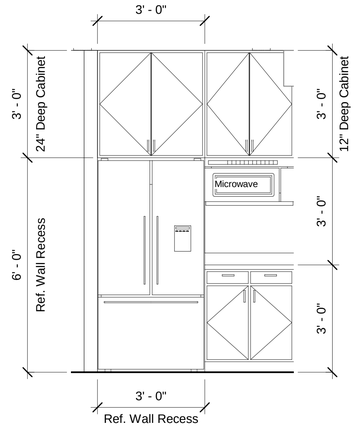

4 Kitchen Ref.
1/2" = 1'-0"

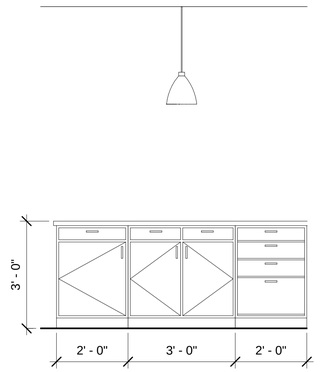

5 Kitchen Island
1/2" = 1'-0"

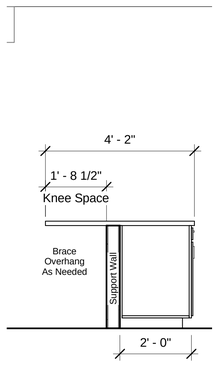

6 Kitchen Island Section
1/2" = 1'-0"

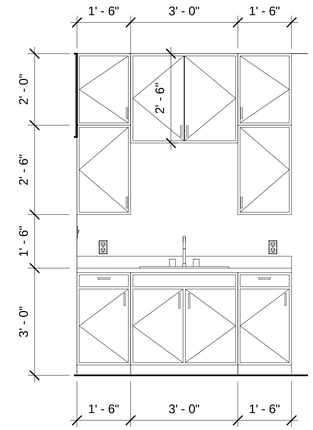

7 Laundry Sink
1/2" = 1'-0"

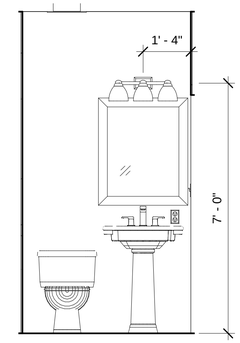

8 Powder Room
1/2" = 1'-0"

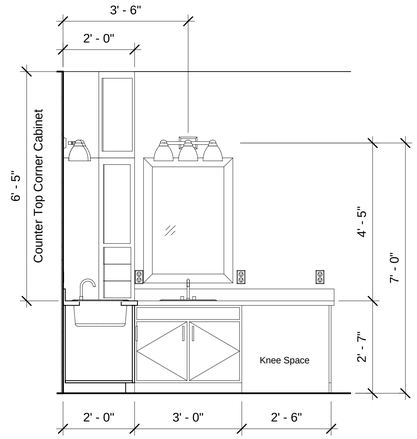

9 Master Vanity 1
1/2" = 1'-0"

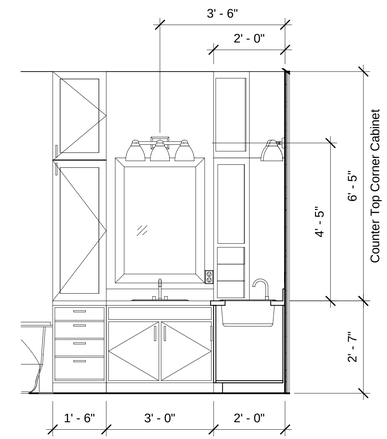

10 Master Vanity 2
1/2" = 1'-0"

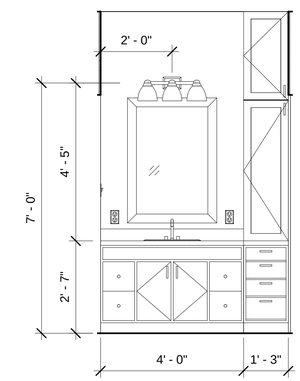

11 Bathroom Vanity
1/2" = 1'-0"

Lone Horn Designs is a professional building designer, not Architects or Engineers. All the ideas, designs, and specifications contained in the drawings you have purchased belong to Lone Horn Designs. Your purchase of this plan is a conditional, single use to construct one project. The reproduction of these plans and designs is prohibited. Lone Horn Designs assumes no liability for changes that might be made by you. This plan requires a competent and experienced contractor and subcontractors to successfully construct this project. The contractor shall be responsible for all conditions on this project. Because these plans are generic in nature, they will have to be adapted to your local soil conditions, climate, building codes, zoning ordinances, deed restrictions and the present and future interpretations of the above. Although we allow for changes to this plan, it is not to be construed to be a license to repeat, copy, or reuse this plan. Lone Horn Designs are not soil, civil, or structural engineers. Any structural information shown on these plans should be reviewed by engineers in your area who are familiar with local conditions. Lone Horn Designs is not responsible for any errors or omissions contained in these plans. Any errors or omissions should be brought to our attention so that we may assist in correcting them. Lone Horn Designs assumes no liability for any damages that may have been caused by errors or omissions contained in these plans. Lone Horn Designs shall not be responsible for any scheduling, construction means, methods, techniques, sequences or procedures, or the safety precautions and programs in connection with the construction, or the performance or non-performance of the contractor or any subcontractors on the project, or any agents or employees of the contractor or any subcontractors, or any other persons performing any of the work, or any agents or employees of any of them, or any other persons at the site or otherwise performing any of the work. Lone Horn Designs shall not be responsible for the failure of any contractor, subcontractor, vendor, or supplier, or any of their agents or employees or any other persons performing any of the work, to comply with laws, rules, regulations, ordinances, codes, or orders applicable to the performance of the work. Lone Horn Designs shall not be responsible for the failure of the contractor to carry out the work in accordance with the contract documents. Lone Horn Designs shall not have control over or charge of and shall not be responsible for acts or omissions of the contractor, subcontractors, or any of their agents or employees, or any other persons performing any of the work. Lone Horn Designs shall not be responsible for the contractor's failure to perform the work in accordance with the contract documents. Lone Horn Designs shall not be responsible for the acts or omissions of the contractor, subcontractors, or any of their agents or employees, or any other persons performing any of the work. Lone Horn Designs shall not be responsible for the failure of the contractor, subcontractors, or any of their agents or employees, or any other persons performing any of the work, to comply with laws, rules, regulations, ordinances, codes, or orders applicable to the performance of the work. Lone Horn Designs shall not have caused other problems, or are found to be flawed. We expect that only the latest, and most widely used, accepted industry standards, techniques, and materials will be used to construct this project. We insist that the performance of this structure be judged by knowledge that exists at the time of construction not by future knowledge that did not exist at this time. A great deal of time has been expended to create an accurate set of drawings to be used for the construction of your project. If problems or items required interpretation do arise contact us at the number provided for a resolution of the discrepancy. All final decisions on the structural stability of the building are up to the builder.

Lone Horn Designs

Notes:

Rev 2
Changed Livingroom
Vault Direction And
Front Roof Entry

True North To Be Determined In Field

Page North

For Construction :

Date: 10-8-18

Ryan & Danielle Kudelka

1252 County Road 388
Hallettsville, Tx. 77964

Sections

Builder

Date 2-2-2018

Drawn by H. Coy

Rev: 2

A3.2

Scale 1/2" = 1'-0"

E-Mail lonehorndesign@Gmail.com Phone : (361)788-3046

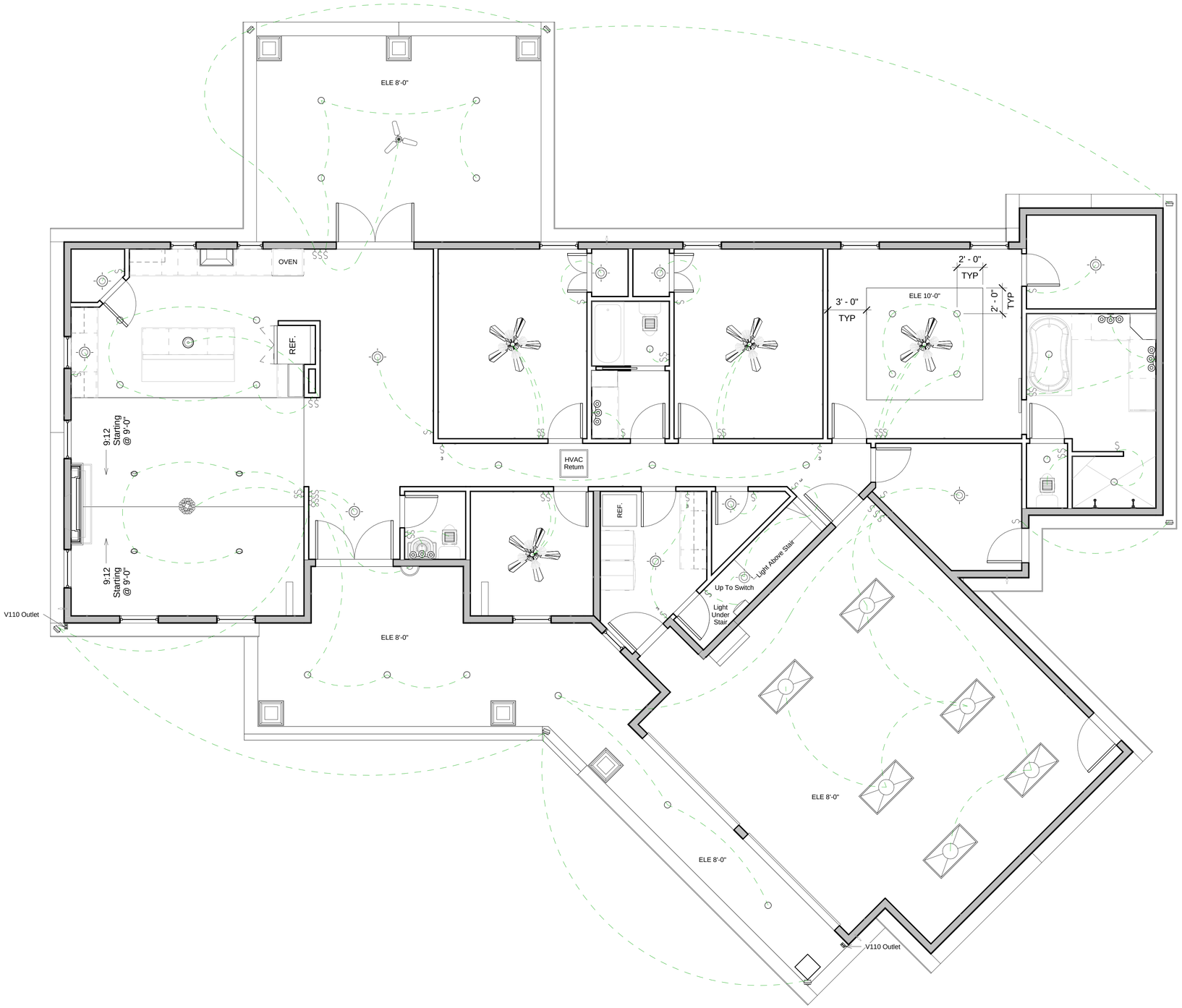

1 Level 1
1/4" = 1'-0"

	CEILING LIGHT
	CEILING FAN WITH LIGHT KIT
	CEILING FAN
	FLUORESCENT LIGHT BOX 4x2
	PENDANT LIGHT
	RECESSED (CAN) LIGHT
	CHANDELIER
	SCONCE LIGHT
	WALL SCONCE LIGHT
	BATHROOM SCONCE LIGHT
	FLOOD/SECURITY LIGHT
	VENT FAN
S	SWITCH
3 S	THREE WAY SWITCH

Light Legend
1/4" = 1'-0"

Lone Horn Designs

Notes:

Ceilings Are 9'-0"
Unless Noted

Rev 2
Changed Livingroom
Vault Direction And
Front Roof Entry

True North
To Be
Determined
In Field

Page North

For Construction :	
Date:	10-8-18

Ryan & Danielle Kudelka

1252 County Road 388
Hallettsville, Tx. 77964

Ceiling LVL 1

Builder	
Date	2-2-2018
Drawn by	H. Coy
Rev:	2

A4.1

Scale 1/4" = 1'-0"

Lone Horn Designs is a professional building designer, not Architects or Engineers. All the ideas, designs, and specifications contained in the drawings you have purchased belong to Lone Horn Designs. Your purchase of this plan is a conditional, single use to construct one project. The reproduction of these plans and designs is prohibited. Lone Horn Designs assumes no liability for changes that might be made by you. This plan requires a competent and experienced contractor and subcontractors to successfully construct this project. The contractor shall be responsible for all conditions on this project. Because these plans are generic in nature, they will have to be adapted to your local soil conditions, climate, building codes, zoning ordinances, deed restrictions and the present and future interpretations of the above. Although we allow for changes to this plan, it is not to be construed to be a license to repeat, copy, or reuse this plan. Lone Horn Designs are not soil, civil, or structural engineers. Any structural information shown on these plans should be reviewed by engineers in your area who are familiar with local conditions and practices. Lone Horn Designs has not visited the construction site and therefore cannot be responsible for any conditions that have caused other problems, or are found to be flawed. We expect that only the latest, and most widely used, accepted industry standards, techniques, and materials will be used to construct this project. We insist that the performance of this structure be judged by knowledge that exists at the time of construction not by future knowledge that did not exist at this time. A great deal of time has been expended to create an accurate set of drawings to be used for the construction of your project. If problems or items required interpretation do arise contact us at the number provided for a resolution of the discrepancy. All final decisions on the structural stability of the building are up to the builder.

E-Mail lonehorndesign@Gmail.com Phone : (361)788-3046

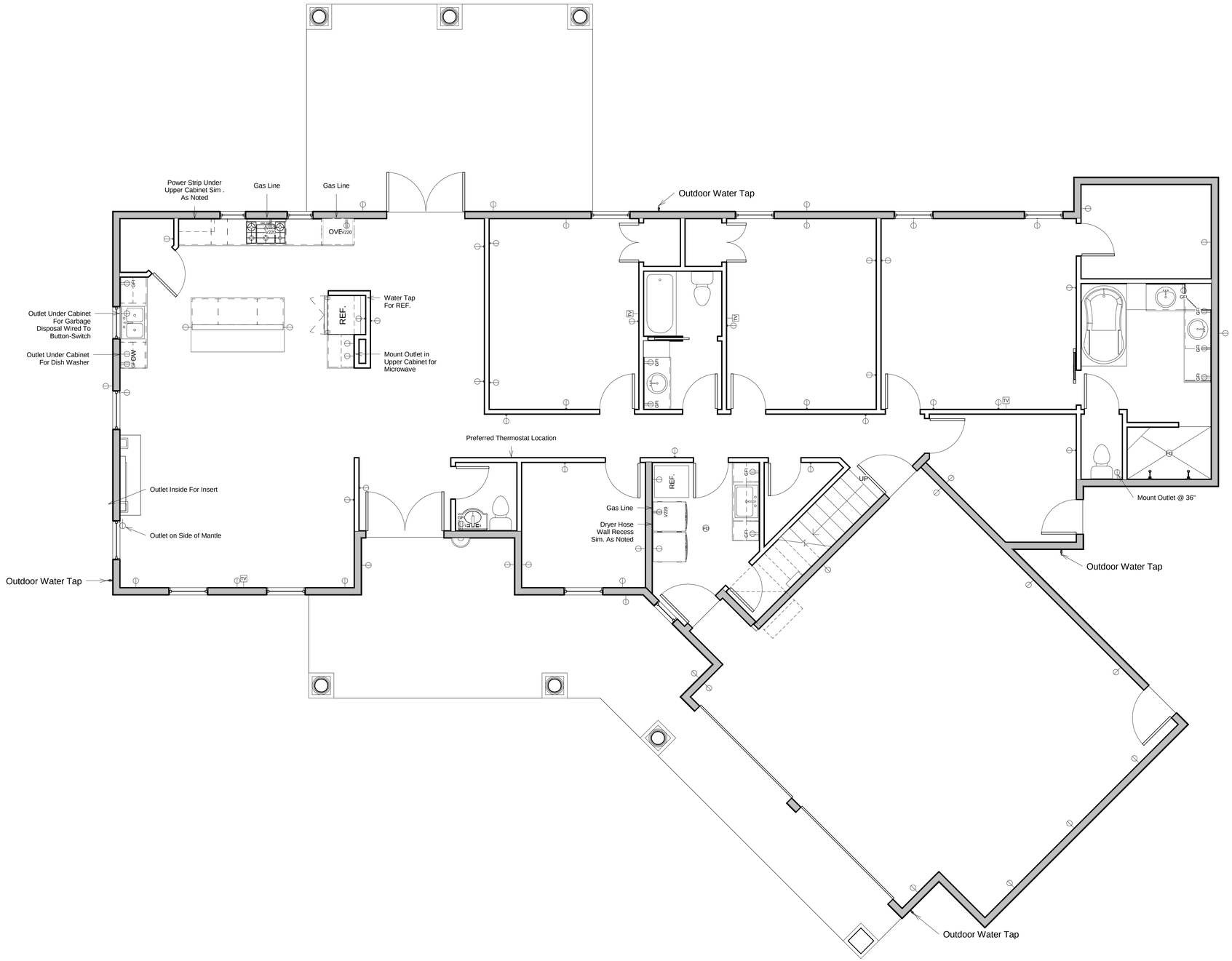

1 Level 1 Power-Water
1/4" = 1'-0"

	120v OUTLET
GFI	120v GFI OUTLET
V220	220v OUTLET
TV	TV/CABLE OUTLET

Power Legend
1/4" = 1'-0"



Kitchen Power Strip



Laundry Dryer Hose Wall Recess

Lone Horn Designs

Notes:

On Demand Gas
Water Heater In Attic

HVAC Heat will be Gas

Rev 2
Changed Livingroom Vault Direction And Front Roof Entry

True North To Be Determined In Field

Page North

For Construction :

Date: 10-8-18

Ryan & Danielle Kudelka

1252 County Road 388
Hallettsville, Tx. 77964

Power-Water LVL1

Builder	
Date	2-2-2018
Drawn by	H. Coy
Rev:	2

A4.2

Scale 1/4" = 1'-0"

Lone Horn Designs is a professional building designer, not Architects or Engineers. All the ideas, designs, and specifications contained in the drawings you have purchased belong to Lone Horn Designs. Your purchase of this plan is a conditional, single use to construct one project. The reproduction of these plans and designs is prohibited. Lone Horn Designs assumes no liability for changes that might be made by you. This plan requires a competent and experienced contractor and subcontractors to successfully construct this project. The contractor shall be responsible for all conditions on this project. Because these plans are generic in nature, they will have to be adapted to your local soil conditions, climate, building codes, zoning ordinances, deed restrictions and the present and future interpretations of the above. Although we allow for changes to this plan, it is not to be construed to be a license to repeat, copy or reuse this plan. Lone Horn Designs are not soil, civil, or structural engineers. Any structural information shown on these plans should be reviewed by engineers in your area, who are familiar with codes and conditions in your area. Structures and foundations vary with the type of soil encountered at the building site. We have included minimum foundation and structural standards in these plans, but it is the responsibility of the contractor and engineers to insure that the performance of this structure be judged by knowledge that exists at the time of construction not by future knowledge that did not exist at this time. A great deal of time has been expended to create an accurate set of drawings to be used for the construction of your project. If problems or items required interpretation do arise contact us at the number provided for a resolution of the discrepancy. All final decisions on the structural stability of the building are up to the builder.

E-Mail lonehorndesign@Gmail.com Phone : (361)788-3046

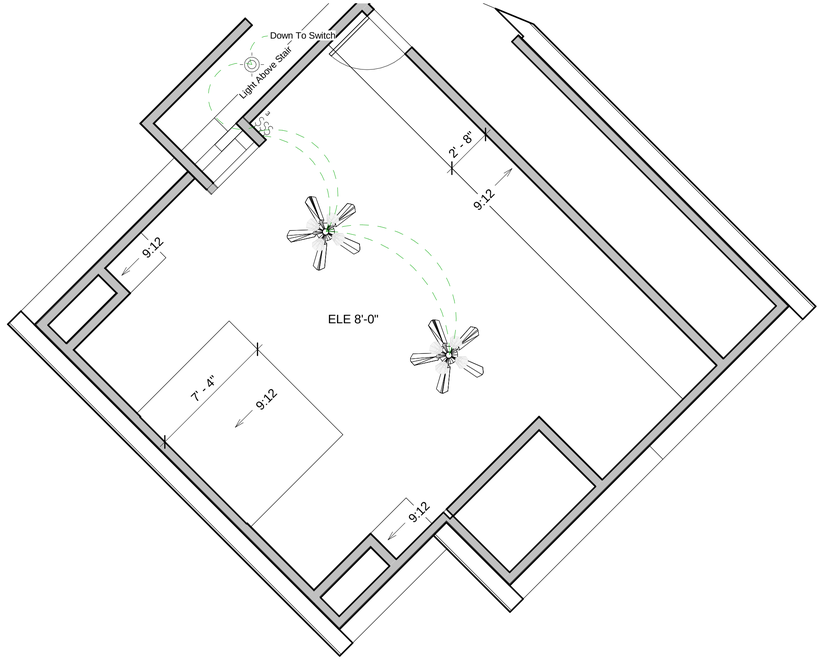

1 Level 2 Garage Space
1/4" = 1'-0"

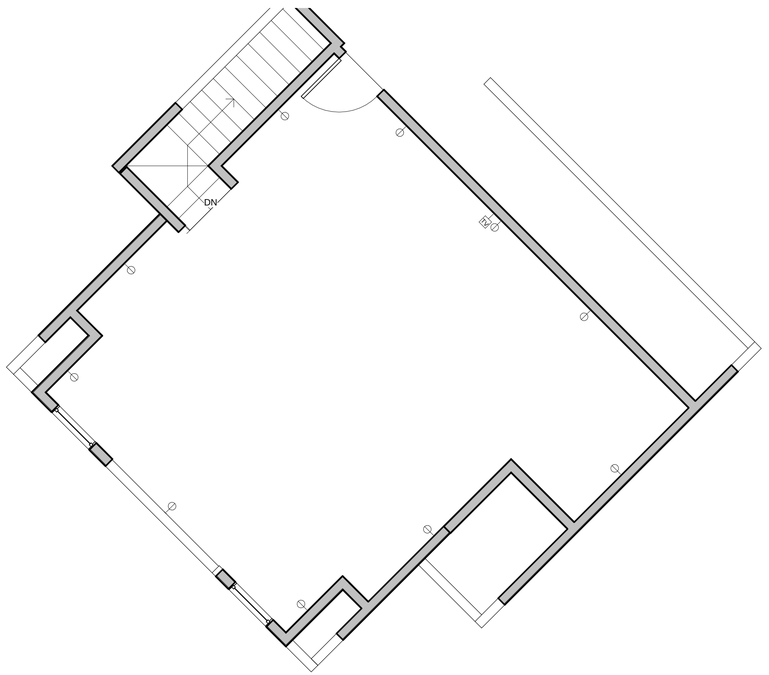

2 Level 2 Garage Space Power-Water
1/4" = 1'-0"

	CEILING LIGHT
	CEILING FAN WITH LIGHT KIT
	CEILING FAN
	FLUORESCENT LIGHT BOX 4x2
	PENDANT LIGHT
	RECESSED (CAN) LIGHT
	CHANDELIER
	SCONCE LIGHT
	WALL SCONCE LIGHT
	BATHROOM SCONCE LIGHT
	FLOOD/SECURITY LIGHT
	VENT FAN
S	SWITCH
S3	THREE WAY SWITCH

Light Legend
1/4" = 1'-0"

	120v OUTLET
GFI	120v GFI OUTLET
V220	220v OUTLET
TV	TV/CABLE OUTLET

Power Legend
1/4" = 1'-0"

Lone Horn Designs

Notes:

Ceilings Are 9'-0"
Unless Noted

Rev 2
Changed Livingroom
Vault Direction And
Front Roof Entry

True North To Be Determined In Field

Page North

For Construction :

Date: 10-8-18

Ryan & Danielle Kudelka

1252 County Road 388
Hallettsville, Tx. 77964

Ceiling-Power-Water LVL 2

Builder	
Date	2-2-2018
Drawn by	H. Coy
Rev:	2

A4.3

Scale 1/4" = 1'-0"

Lone Horn Designs is a professional building designer, not Architects or Engineers. All the ideas, designs, and specifications contained in the drawings you have purchased belong to Lone Horn Designs. Your purchase of this plan is a conditional, single use to construct one project. The reproduction of these plans and designs is prohibited. Lone Horn Designs assumes no liability for changes that might be made by you. This plan requires a competent and experienced contractor and subcontractors to successfully construct this project. The contractor shall be responsible for all conditions on this project. Because these plans are generic in nature, they will have to be adapted to your local soil conditions, climate, building codes, zoning ordinances, deed restrictions and the present and future interpretations of the above. Although we allow for changes to this plan, it is not to be construed to be a license to repeat, copy or reuse this plan. Lone Horn Designs does not supervise construction, construction means, methods, techniques, sequences or procedures, or safety precautions and programs in connection with the construction. Lone Horn Designs does not visit the site and is not responsible for contractors' failure to carry out the construction in accordance with the construction documents. Structural and foundation calculations are the responsibility of others. Lone Horn Designs is not responsible for any errors or omissions in the construction documents that may have caused other problems, or are found to be flawed. We expect that only the latest, and most widely used, accepted industry standards, techniques, and materials will be used to construct this project. We insist that the performance of this structure be judged by knowledge that exists at the time of construction not by future knowledge that did not exist at this time. A great deal of time has been expended to create an accurate set of drawings to be used for the construction of your project. If problems or items required interpretation do arise contact us at the number provided for a resolution of the discrepancy. All final decisions on the structural stability of the building are up to the builder.

E-Mail lonehorndesign@Gmail.com Phone : (361)788-3046

Lone Horn Designs is a professional building designer, not Architects or Engineers. All the ideas, designs, and specifications contained in the drawings you have purchased belong to Lone Horn Designs. Your purchase of this plan is a conditional, single use to construct one project. The reproduction of these plans and designs is prohibited. Lone Horn Designs assumes no liability for changes that might be made by you. This plan requires a competent and experienced contractor and subcontractors to successfully construct this project. The contractor shall be responsible for all conditions on this project. Because these plans are generic in nature, they will have to be adapted to your local soil conditions, climate, building codes, zoning ordinances, deed restrictions and the present and future interpretations of the above. Although we allow for changes to this plan, it is not to be construed to be a license to repeat, copy or reuse this plan. Lone Horn Designs are not soil, civil, or structural engineers. Any structural information shown on these plans should be reviewed by engineers in your area who are familiar with soil conditions, construction techniques, and codes. Structural details and notes contained in these plans are generic in nature. Lone Horn Designs is not responsible for any structural problems that have caused other problems, or are found to be flawed. We expect that only the latest, and most widely used, accepted industry standards, techniques, and materials will be used to construct this project. We insist that the performance of this structure be judged by knowledge that exists at the time of construction not by future knowledge that did not exist at this time. A great deal of time has been expended to create an accurate set of drawings to be used for the construction of your project. If problems or items required interpretation do arise contact us at the number provided for a resolution of the discrepancy. All final decisions on the structural stability of the building are up to the builder.

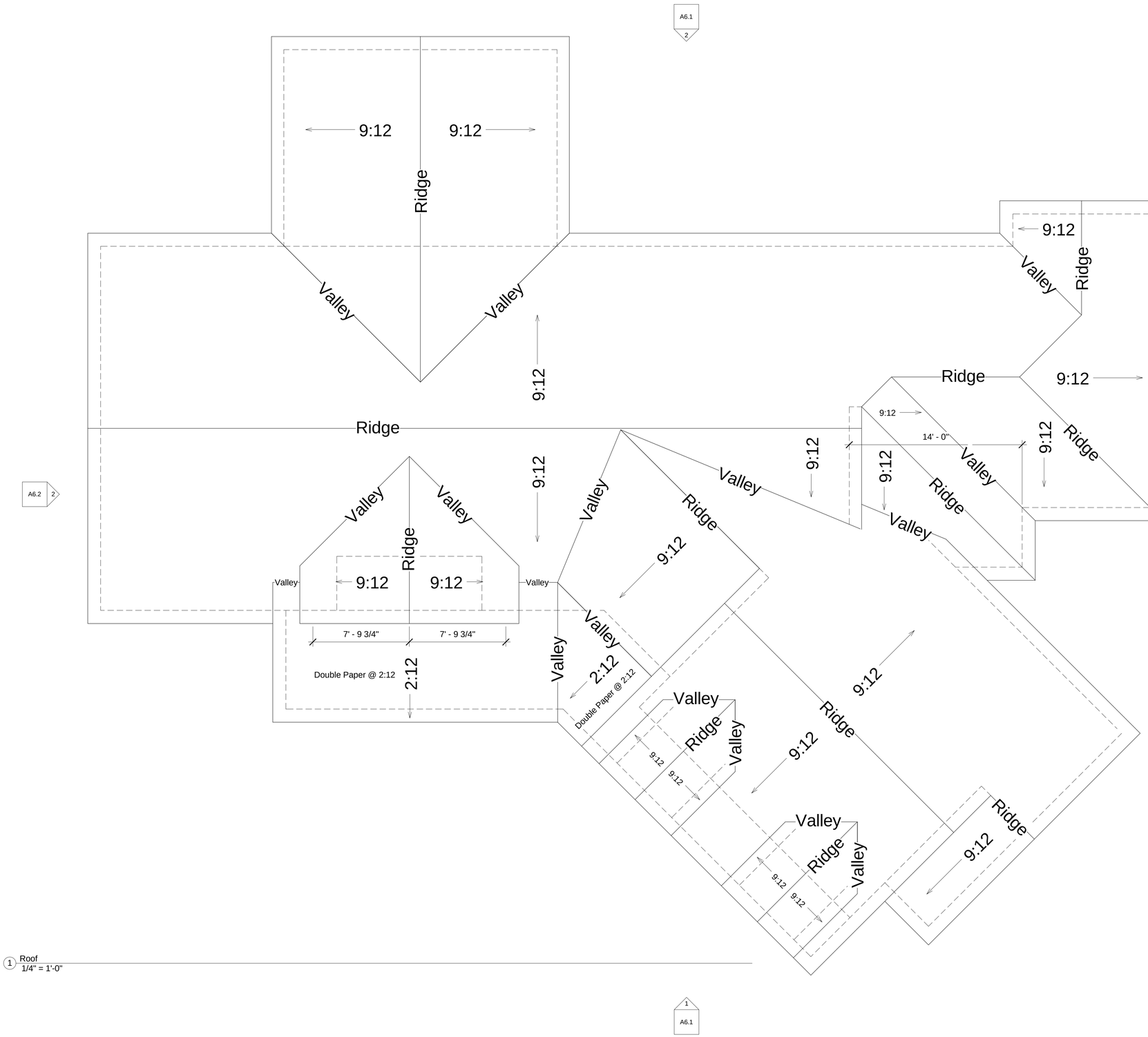

1 Roof
1/4" = 1'-0"

1
A6.1

0 2' 4' 8'

Lone Horn Designs

Notes:

All Overhangs Are 1'-0"
Unless Noted

Rev 2
Changed Livingroom
Vault Direction And
Front Roof Entry

True North To Be Determined In Field

Page North

For Construction :

Date: 10-8-18

Ryan & Danielle Kudelka

1252 County Road 388
Hallettsville, Tx. 77964

Roof

Builder	
Date	2-2-2018
Drawn by	H. Coy
Rev:	2

A5.1

Scale 1/4" = 1'-0"

E-Mail lonehorndesign@Gmail.com Phone : (361)788-3046

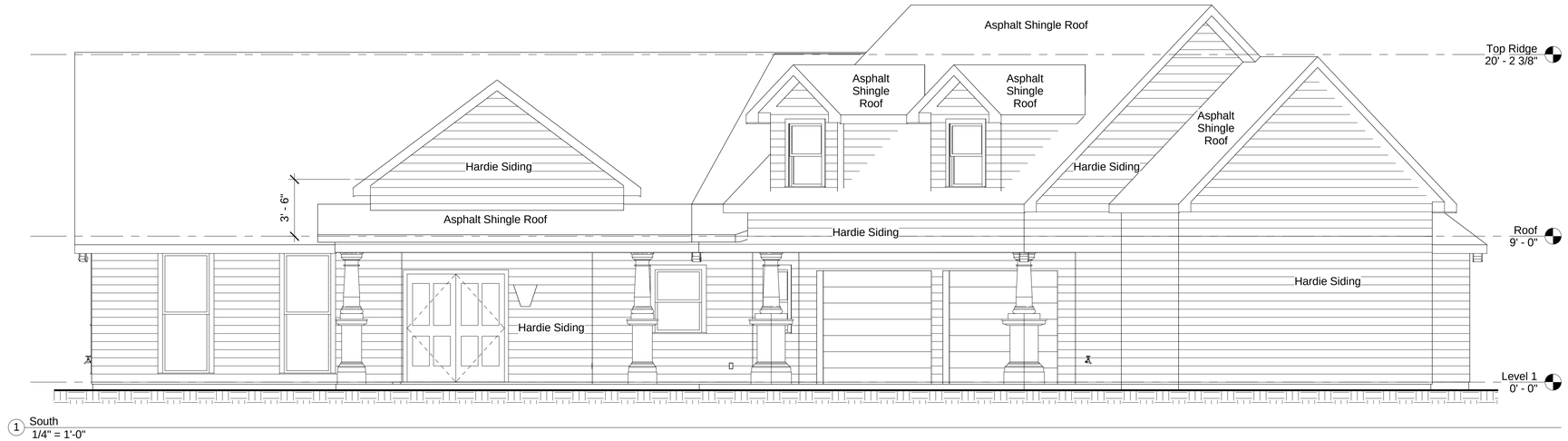

1 South
1/4" = 1'-0"

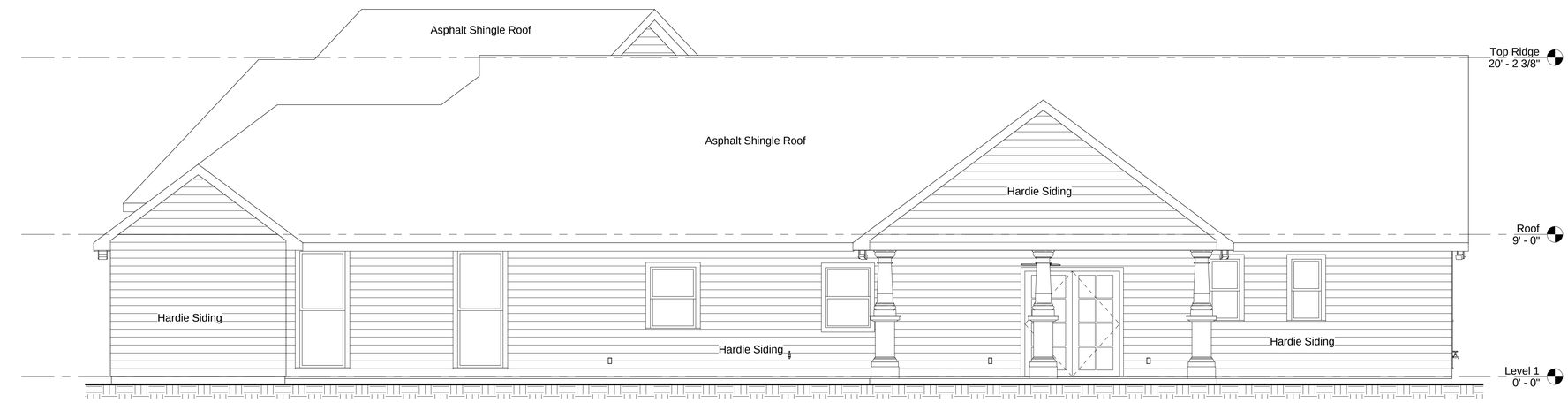

2 North
1/4" = 1'-0"

0 2' 4' 8'

Lone Horn Designs is a professional building designer, not Architects or Engineers. All the ideas, designs, and specifications contained in the drawings you have purchased belong to Lone Horn Designs. Your purchase of this plan is a conditional, single use to construct one project. The reproduction of these plans and designs is prohibited. Lone Horn Designs assumes no liability for changes that might be made by you. This plan requires a competent and experienced contractor and subcontractors to successfully construct this project. The contractor shall be responsible for all conditions on this project. Because these plans are generic in nature, they will have to be adapted to your local soil conditions, climate, building codes, zoning ordinances, deed restrictions and the present and future interpretations of the above. Although we allow for changes to this plan, it is not to be construed to be a license to repeat, copy or reuse this plan. Lone Horn Designs are not soil, civil, or structural engineers. Any structural information shown on these plans should be reviewed by engineers in your area. You are hereby informed that construction documents and foundations are site specific. Any foundation or construction errors that occur due to the use of these plans will be the responsibility of the owner and contractor. Lone Horn Designs will not be held responsible for any damages that may occur during construction or after the home is occupied that have caused other problems, or are found to be flawed. We expect that only the latest, and most widely used, accepted industry standards, techniques, and materials will be used to construct this project. We insist that the performance of this structure be judged by knowledge that exists at the time of construction not by future knowledge that did not exist at this time. A great deal of time has been expended to create an accurate set of drawings to be used for the construction of your project. If problems or items required interpretation do arise contact us at the number provided for a resolution of the discrepancy. All final decisions on the structural stability of the building are up to the builder.

Lone Horn Designs

Notes:

Rev 2
Changed Livingroom Vault Direction And Front Roof Entry

True North To Be Determined In Field

Page North

For Construction :

Date: 10-8-18

Ryan & Danielle Kudelka

1252 County Road 388
Hallettsville, Tx. 77964

Elevation

Builder	
Date	2-2-2018
Drawn by	H. Coy
Rev:	2

A6.1

Scale 1/4" = 1'-0"

E-Mail lonehorndesign@Gmail.com Phone : (361)788-3046

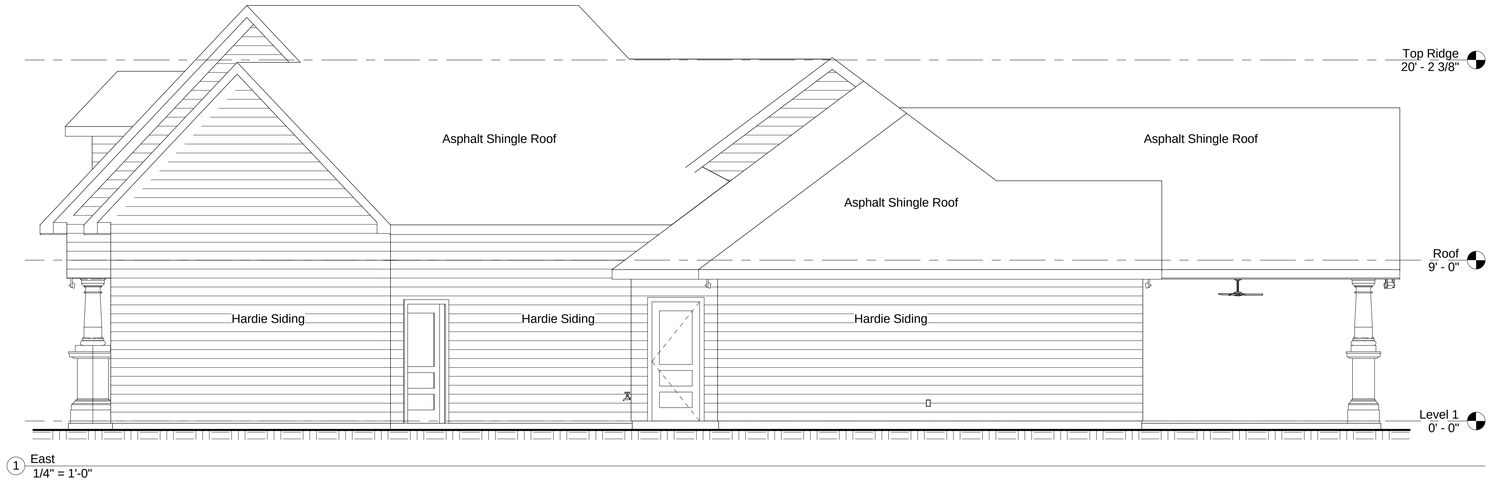

1 East
1/4" = 1'-0"

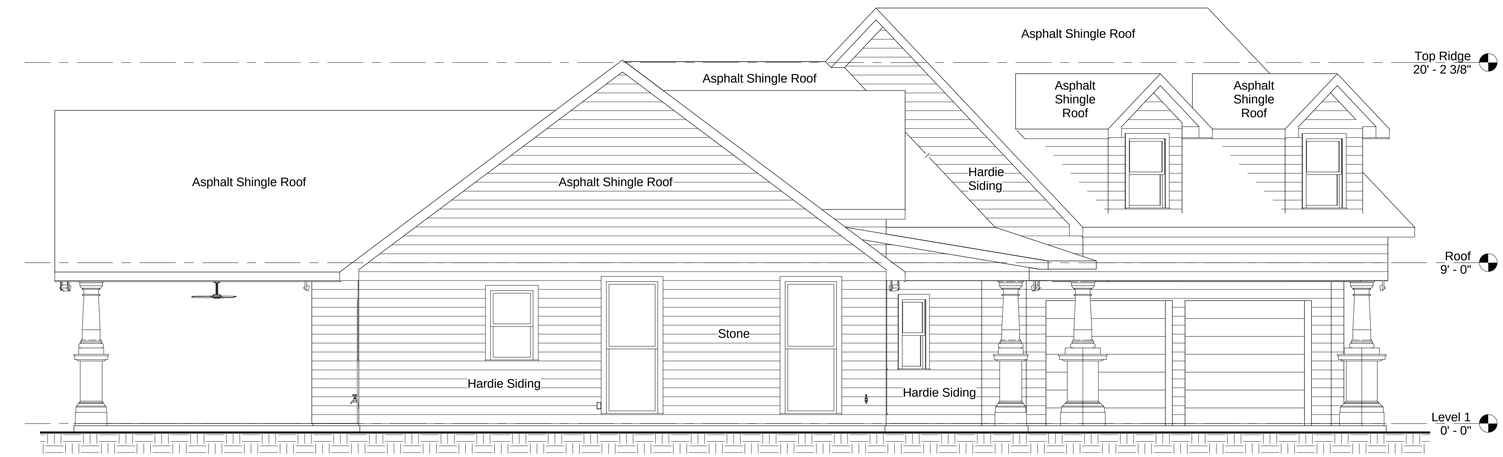

2 West
1/4" = 1'-0"

0 2' 4' 8'

Lone Horn Designs

Notes:

Rev 2
Changed Livingroom Vault Direction And Front Roof Entry

True North To Be Determined In Field

Page North

For Construction :

Date: 10-8-18

Ryan & Danielle Kudelka

1252 County Road 388
Hallettsville, Tx. 77964

Elevation

Builder

Date 2-2-2018

Drawn by H. Coy

Rev: 2

A6.2

Scale 1/4" = 1'-0"

Lone Horn Designs is a professional building designer, not Architects or Engineers. All the ideas, designs, and specifications contained in the drawings you have purchased belong to Lone Horn Designs. Your purchase of this plan is a conditional, single use to construct one project. The reproduction of these plans and designs is prohibited. Lone Horn Designs assumes no liability for changes that might be made by you. This plan requires a competent and experienced contractor and subcontractors to successfully construct this project. The contractor shall be responsible for all conditions on this project. Because these plans are generic in nature, they will have to be adapted to your local soil conditions, climate, building codes, zoning ordinances, deed restrictions and the present and future interpretations of the above. Although we allow for changes to this plan, it is not to be construed to be a license to repeat, copy or reuse this plan. Lone Horn Designs is not liable for any construction means, methods, techniques, sequences or procedures, or for safety precautions and programs in connection with the construction. Lone Horn Designs accepts no responsibility for any failure to construct this project in accordance with these plans and specifications. Lone Horn Designs shall not be responsible for any errors or omissions in the plans that have caused other problems, or are found to be flawed. We expect that only the latest, and most widely used, accepted industry standards, techniques, and materials will be used to construct this project. We insist that the performance of this structure be judged by knowledge that exists at the time of construction not by future knowledge that did not exist at this time. A great deal of time has been expended to create an accurate set of drawings to be used for the construction of your project. If problems or items required interpretation do arise contact us at the number provided for a resolution of the discrepancy. All final decisions on the structural stability of the building are up to the builder.