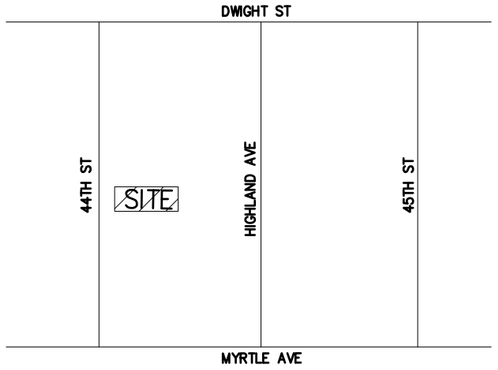

VICINITY MAP



STREET VIEW



AERIAL VIEW

THE BALLOW RESIDENCE

3543 44TH ST | *SAN DIEGO, CA 92105*

SHEET INDEX

TS1–2	TITLE SHEET
A01	SITE
A1	EXISTING FLOOR PLAN
A2	PROPOSED FLOOR PLAN
A3	DIMENSION PLAN
A4	FOUNDATION PLAN
A5	ROOF PLAN
A6	ROOF FRAMING PLAN
A7	MEP PLAN 1
A8	MEP PLAN 2
A9	ELEVATIONS
AD1–AD2	SECTIONS & DETAILS

APPENDIX

GN1–4	NOTES & SPECIFICATIONS
B1–3	TRUSS PLANS & DETAILS
T1–7	TITLE 24 REPORT

PROPERTY DATA

MAIN ADDRESS: 3545 44TH ST, SAN DIEGO, CA 92105
ASSESSORS PARCEL NO. (APN): 476–032–10–00
LEGAL DESCRIPTION: TR 1028 BLK 6*LOTS 13 & 14
LOT SIZE: 6,092 SF
EX. LIVING AREA: 2,880 SF
EX. GARAGE AREA:
STORIES: 2
YEAR BUILT: 1955
CURRENT ZONING: RM–1–1
OCCUPANCY GROUP: SINGLE FAMILY RESIDENTIAL
PROPOSED ADDITIONAL USES: NONE
EX. FIRE SPRINKLERS: NONE
OVERLAY ZONES: https://www.sandiego.gov/development–services/zoning

PROJECT INFORMATION

COMPANION UNIT ADDRESS: 3543 44TH ST, SAN DIEGO, CA 92105
AREA OF PROPOSED COMPANION UNIT: 792 SF
STORIES: 1
HEIGHT: 12'–8"
OCCUPANCY: RESIDENTIAL
BUILDING CODE: 2019 CALIFORNIA BUILDING CODE
TYPE OF CONSTRUCTION: RESIDENTIAL, TYPE V–B

PROJECT DIRECTORY

PROPERTY OWNER & FINANCIALLY RESPONSIBLE PARTY:
CHRISTIAN BALLOW
619–207–7601
CHRISTIAN@GENEBOWMAN.COM

DRAFTSMAN INFORMATION:
PACIFIC COAST DRAFTING
PO BOX 91293
SAN DIEGO, CA 92169
EMAIL: EPMAHONY@GMAIL.COM

CONTRACTOR INFORMATION:
OWNER–BUILDER
CHRISTIAN BALLOW

TRUSS MANUFACTURER:
MISSION TRUSS
12538 VIGILANTE RD
LAKESIDE, CA 92040
619–873–0440

WATER & SEWER INFORMATION

SAN DIEGO MUNICIPAL WATER DISTRICT
FINANCIALLY RESPONSIBLE PARTY FOR FEES:
CHRISTIAN BALLOW
619–207–7601
CHRISTIAN@GENEBOWMAN.COM

CONSTRUCTION NOTES:

THIS PROJECT SHALL COMPLY WITH THE 2019 CALIFORNIA BUILDING CODE, AND WHERE APPLICABLE THE 2019 CODE SHALL COMPLY WITH THE FOLLOWING CODES:
2019 CALIFORNIA BUILDING CODE
2019 CALIFORNIA PLUMBING CODE
2019 CALIFORNIA ELECTRICAL CODE
2019 CALIFORNIA GREEN BUILDING CODE
2019 CALIFORNIA MECHANICAL CODE
2019 CALIFORNIA RESIDENTIAL CODE
2019 CALIFORNIA BUILDING ENERGY EFFICIENCY STANDARDS
2019 CALIFORNIA FIRE CODE

SCOPE OF WORK

OBTAIN A BUILDING PERMIT FOR A PROPOSED SINGLE–STORY COMPANION UNIT, 792 SF.

*DEFERRED SUBMITTAL ITEMS: 1.78 KWDC PHOTOVOLTAIC SYSTEM

HERS NOTES

1. PROPERLY COMPLETED AND ELECTRONICALLY SIGNED CERTIFICATE OF INSTALLATION (CF2R FORMS) SHALL BE POSTED WEATHER PROTECTED WITHIN BUILDING FOR REVIEW BY INSPECTORS – EES 10–103(a)3, 10–103(b)1.A – BY THE INSTALLING CONTRACTOR AND SUBMITTED TO THE FIELD INSPECTOR DURING CONSTRUCTION AT THE SITE. FOR PROJECTS REQUIRING HERS VERIFICATION, THE CF2R FORMS SHALL BE REGISTERED WITH A CALIFORNIA APPROVED HERS PROVIDER DATA REGISTRY WITH ITS OWN UNIQUE 21 DIGIT REGISTRATION NUMBER LOCATED AT THE BOTTOM OF EACH PAGE. THE FIRST 12 DIGITS WILL MATCH THE REGISTRATION NUMBER ASSOCIATED WITH THE CF1R FORM. CERTIFICATE OF OCCUPANCY WILL NOT BE ISSUED UNTIL THE CF2R FORMS ARE REVIEWED AND APPROVED.
2. PROPERLY COMPLETED & ELECTRONICALLY SIGNED AND REGISTERED CERTIFICATE(S) OF FIELD VERIFICATION AND DIAGNOSTIC TESTING (CF3R) SHALL BE POSTED WEATHER PROTECTED WITHIN THE BUILDING SITE BY A CERTIFIED HERS RATER. A REGISTERED CF3R WILL HAVE A UNIQUE 25 DIGIT REGISTRATION NUMBER LOCATED AT THE BOTTOM OF EACH PAGE. THE FIRST 20 DIGITS OF THE NUMBER WILL MATCH THE REGISTRATION NUMBER ASSOCIATED WITH THE CF2R. CERTIFICATE OF OCCUPANCY WILL NOT BE ISSUED UNTIL THE CF3R IS REVIEWED AND APPROVED. EES 10–103(a)3, 10–103(b)1.A.
3. CF1R REGISTRATION FORMS ARE LOCATED ON THE PLANS. IF REGISTRATION IS REQUIRED, A WATER–MARK AND REGISTRATION NUMBER WILL BE VISIBLE.
4 HERS TESTS REQUIRED FOR THIS PROJECT ARE:
CU & Jr. Unit:
REFRIGERANT CHARGE
VERIFIED HEAT PUMP HEATING CAPACITY
KITCHEN RANGE HOOD CFM VERIFICATION(100 CFM & <= 3 sones, CEC listed)
IAQ MECHANICAL VENTILATION –44 cfm for the CU & 28 cfm for the Jr. Unit
5. FOR IAQ FAN –44/28 CFM REQUIRED FOR A CONTINUOUSLY OPERATING EXHAUST FAN. PROVIDE A TIMER SWITCH WITH A MANUAL OFF AND A SOUND RATING OF 1 SONE (3 SONES MAX FOR AN INTERMITTANT FAN). THIS FAN TO PROVIDE WHOLE BUILDING INDOOR AIR QUALITY VENTILATION WITH OUTDOOR AIR IN COMPLIANCE WITH ASHRAE STANDARD 62.2 AS ADOPTED BY THE CALIFORNIA ENERGY COMMISSION.
6. SOLAR IS REQUIRED FOR THIS PROJECT:
CU – 1.86 KWDC IS THE MIN P.V. REQUIRED TO MEET THE STANDARD DESIGN.
Jr.Unit – 1.60 KWDC IS THE MIN P.V. REQUIRED TO MEET THE STANDARD DESIGN.
7. SPECIAL FEATURES: Exposed Slab Flooring for the CU & Jr. Unit. Overhangs were modeled at the addition.

3/29/2024, 1:38:28 PM
PRJ-1070918
Adrian Feral

PACIFIC COAST
619-453-3142
INFO@PACIFICCOASTDRAFTING.COM

THE BALLOW RESIDENCE
3543 44TH ST
SAN DIEGO, CA 92105

ATTN:
CHRISTIAN BALLOW
619–207–7601
CHRISTIAN@GENEBOWMAN.COM

REVISIONS
3–29–23

PROJECT NO.
PRJ–1070918

PREPARER OF PLAN
ED MAHONY

TS1

OSHPD

THE BALLOW RESIDENCE

3545 44th St, San Diego, CA 92105, USA

Latitude, Longitude: 32.7430293, -117.0995647



Date	8/17/2022, 1:45:22 PM
Design Code Reference Document	ASCE7-16
Risk Category	II
Site Class	D - Default (See Section 11.4.3)

Type	Value	Description
S_S	1.08	MCE_R ground motion. (for 0.2 second period)
S_1	0.373	MCE_R ground motion. (for 1.0s period)
S_{MS}	1.296	Site-modified spectral acceleration value
S_{M1}	null -See Section 11.4.8	Site-modified spectral acceleration value
S_{DS}	0.864	Numeric seismic design value at 0.2 second SA
S_{D1}	null -See Section 11.4.8	Numeric seismic design value at 1.0 second SA

Type	Value	Description
SDC	null -See Section 11.4.8	Seismic design category
F_a	1.2	Site amplification factor at 0.2 second
F_v	null -See Section 11.4.8	Site amplification factor at 1.0 second
PGA	0.479	MCE_G peak ground acceleration
F_{PGA}	1.2	Site amplification factor at PGA
PGA_M	0.575	Site modified peak ground acceleration
T_L	8	Long-period transition period in seconds
SsRT	1.08	Probabilistic risk-targeted ground motion. (0.2 second)
SsUH	1.228	Factored uniform-hazard (2% probability of exceedance in 50 years) spectral acceleration
SsD	1.5	Factored deterministic acceleration value. (0.2 second)
S1RT	0.373	Probabilistic risk-targeted ground motion. (1.0 second)
S1UH	0.418	Factored uniform-hazard (2% probability of exceedance in 50 years) spectral acceleration
S1D	0.6	Factored deterministic acceleration value. (1.0 second)
PGAd	0.598	Factored deterministic acceleration value. (Peak Ground Acceleration)
PGA_{UH}	0.479	Uniform-hazard (2% probability of exceedance in 50 years) Peak Ground Acceleration

Type	Value	Description
C_{RS}	0.88	Mapped value of the risk coefficient at short periods
C_{R1}	0.891	Mapped value of the risk coefficient at a period of 1 s
C_V	1.316	Vertical coefficient

BASIS OF STRUCTURAL DESIGN SUMMARY

BASIS OF DESIGN OF STRUCTURES IS CONVENTIONAL LIGHT–FRAME CONSTRUCTION USING DESIGN PARAMETERS PER CALIFORNIA BUILDING CODE SECTION 2308
–DESIGN OF ROOF AND FLOOR LOAD PER CBC SECTION 1607.

WIND DESIGN DATA:
–BASIS DESIGN WIND SPEED SPECIFIED PER CBC 1609.3
–ASD DESIGN WIND SPEED SPECIFIED PER CBC 1609.3.1
–EXPOSURE CATEGORY SPECIFIED PER CBC 1609.4

SEISMIC DESIGN DATA:
SITE CLASS SPECIFIED PER ASCE 7 20.3
–MAPPED SPECTRAL RESPONSE ACCELERATION PARAMETERS, SS & S1 PER CBC 1613.3.4
–DESIGN SPECTRAL RESPONSE ACCELERATION PARAMETERS, SDS & SD1, SPECIFIED PER CBC 1613.3.4
–SEISMIC DESIGN CATEGORY SPECIFIED PER 1613.3.5

THE BASIS OF SOIL DESIGN VALUES IS CALIFORNIA BUILDING CODE TABLE 1806.2
–CLASS OF SOIL MATERIALS SPECIFIED PER CBC TABLE 1806.2
–ALLOWABLE VERTICAL BEARING PRESSURE SPECIFIED PER CBC TABLE 1806.2

DESIGN LOADS

ROOF
ASPHALT SHINGLE + SOLAR 8 PSI MAX.
TOTAL DEAD LOAD = 18.0 PSF
LIVE LOAD = 20 PSF
TOTAL LOAD = 38 PSF

EXTERIOR WALL (STUCCO) = 16.0 PSF
INTERIOR WALL = 7.0 PSF

ALLOWABLE SOIL BEARING PRESSURE: 1,500 PSF
EXISTING NATURAL SOIL PER 2019 CBC TABLE 1806.2



3/29/2024, 1:38:28 PM
PRJ-1070918
Adrian Feral

PACIFIC COAST
619-453-3142
INFO@PACIFICCOASTDRAFTING.COM

THE BALLOW RESIDENCE
3543 44TH ST
SAN DIEGO, CA 92105

ATTN:
CHRISTIAN BALLOW
619–207–7601
CHRISTIAN@GENEBOWMAN.COM

REVISIONS
3–29–23

PROJECT NO.
PRJ–1070918

PREPARER OF PLAN
ED MAHONY

TS2

LEGEND:

- FOOTPRINT OF BUILDING
- ROOF LINE
- PROPERTY LINE
- HARDSCAPE
- SETBACKS
- EX. 5' CMU WALL
- EX. 5' FENCE LINE
- G — N. GAS LINE
- S — N. SEWER LINE
- W — N. WATER LINE
- CATV — N. CABLE LINE
- PROPOSED AREA
- DRAINAGE ARROW

PROPERTY OWNER: CHRISTIAN BALLOW

COMPANION UNIT ADDRESS: 3543 44TH ST, SAN DIEGO, CA 92105

RM-1-1 SETBACKS
FYSB = 20'
RYSB = 15'
SYSB = 5'

LOT SIZE: 6,092 SF
EX. BLDG & GARAGE (1955): 2,880 SF
AREA OF PROPOSED COMPANION UNIT: 792 SF

SITE PLAN - KEYED NOTES

1	EX. DRIVEWAY	11	EX. STAIRS
2	EX. SIDEWALK	12	EX. BALCONY
3	EX. CURB & GUTTER	13	EX. HEAT PUMP
4	EX. HARDSCAPE	14	N. HEAT PUMP
5	EX. WATER METER	15	N. TANKLESS WH
6	EX. ELEC. METER	17	N. DOWNSPOUT
7	EX. GAS METER	18	N. GAS LINE
8	EX. GATE	19	N. WATER LINE
9	EX. FENCE	20	N. SEWER LINE
10	EX. LANDSCAPING	21	N. SOLAR PANELS

TOTAL WATER FIXTURES

	EXISTING	PROPOSED
CLOTHES WASHER	1	1
DISHWASHWER	0	0
HOSE BIB	2	0
LAVATORY	4	2
KITCHEN SINK	4	1
BATH/SHOWER COMBO	4	2
SHOWER	0	0
TOILET	4	2
	19	8
TOTAL FIXTURES		27

EARTHWORK QUANTITIES

CUT QUANTITIES (cyd)	7
FILL QUANTITIES (cyd)	0
IMPORT/EXPORT (cyd)	0
MAX CUT DEPTH (FT)	2
MAX FILL DEPTH (FT)	0

IMPERVIOUS AREAS

EX. COMPLEX (SF)	1519
EX. HARDSCAPE (SF)	150
PROPOSED COMP. UNIT (SF)	792
IMPERVIOUS AREAS TOTALS	
TOTAL DISTRUBED AREA (SF)	792
EX. AMOUNT OF IMP. AREA (SF)	1669
PROPOSED IMP. AREA (SF)	792
TOTAL IMP. AREA (SF)	2461
IMP. % INCREASE	32



WATER Piping	DRAIN - Waste Piping	FUEL GAS Piping
Metallic piping shall be a minimum of 12" below finish grade.	Metallic piping shall be a minimum of 18" below finish grade.	Metallic piping must be 6" minimum above finish grade or factory wrapped w/ protective coating.
Non - Metallic piping shall be a minimum of 18" below finish grade.	(a) 12" minimum below finish grade (b) For pipe installed to no. road cross buildings, the sewer must be 12" inside the water piping. The sewer pipe shall be to one side as a solid shelf - never deeper to the top of the sewer 2?"	Non-metallic pipe piping must be 18" minimum below finish grade. Note: Due to no events, the below metallic portion of the non-steel piping for minimum before connecting to the steel piping - use of a factory manufactured connector or coupler fittings must be prohibited/encouraged with minimum of 45 inch of cover/exposure. Non-metallic pipe shall be marked with tape or detectable to be visible during any and all excavation above the pipe work. The identifying tape for locating of what is continuous of 3" or increasing a paved over the years.

1 *UTILITY LINE DETAIL*

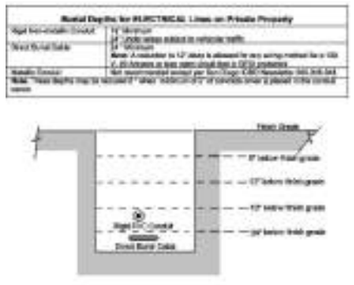

2 *UTILITY LINE DETAIL*

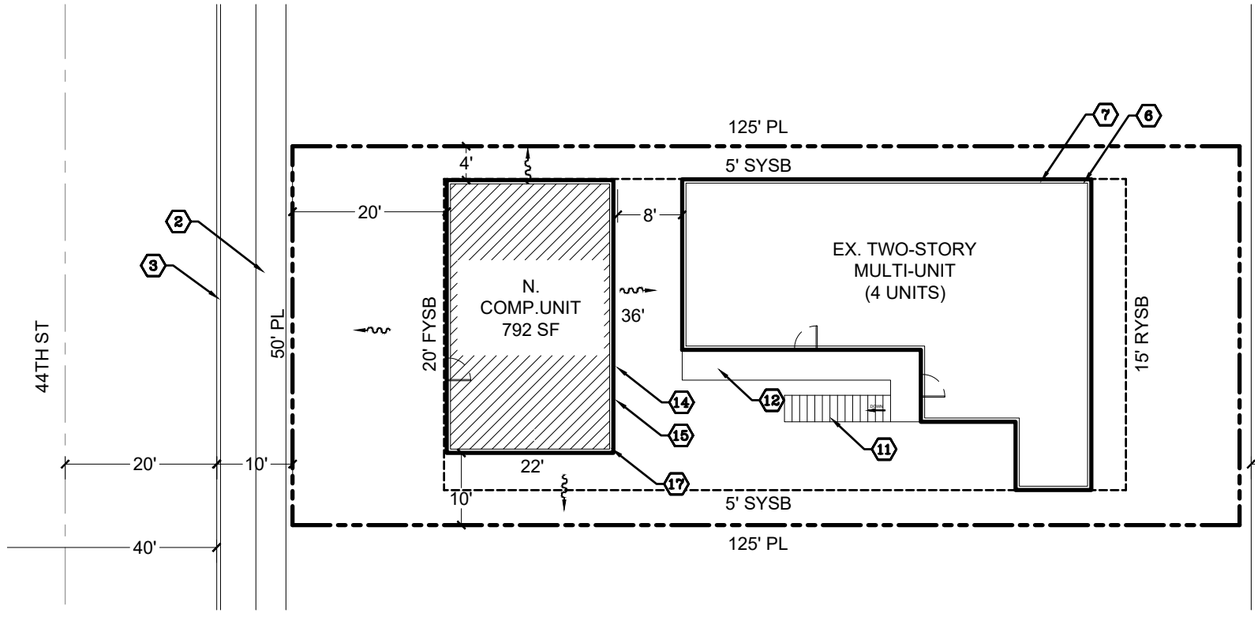

SITE PLAN

SCALE: 1" = 20' (11X17)
SCALE: 1" = 10 (22X34)

GENERAL NOTES:

1. THE STRUCTURE WILL BE LOCATED ENTIRELY ON UNDISTURBED/NATURAL SOIL.

2. THE PROJECT PROPOSES TO EXPORT 0 CY OF MATERIAL FROM THIS SITE. ALL EXPORT MATERIAL SHALL BE DISCHARGED TO A LEGAL DISPOSAL SITE. THE APPROVAL OF THIS PROJECT DOES NOT ALLOW PROCESSING AND SALE OF THE MATERIAL, ALL SUCH ACTIVITIES REQUIRE A SEPARATE CONDITIONAL USE PERMIT.

3. PENETRATIONS SHALL BE PROTECTED IN ACCORDANCE WITH 2019 CRC WHERE WALL IS LESS THAN 5' FROM THE INTERIOR LOT LINE.

4. NO WORK WILL BE PERFORMED OR IS PROPOSED WITHIN THE PUBLIC RIGHT-OF-WAY.

5. SEWER LINE SERVING DETACHED COMPANION UNIT TO CONNECT TO EXISTING LATERAL.

6. EXISTING DWELLING UNIT IS NOT SPRINKLERED. PROPOSED COMPANION UNIT NOT REQUIRED TO BE SPRINKLERED.

7. THE OWNER OR CONTRACTOR SHALL DESIGNATE A SITE-SPECIFIC SUPERVISOR TO ENFORCE COVID-19 RESPONSE PRACTICE WS ON EACH JOB SITE AND PERFORM REGULAR JOB INSPECTIONS. SEE CITY OF SAN DIEGO DEVELOPMENT SERVICES DEPARTMENT "COVID-19 SAFETY PROTOCOLS FOR CONSTRUCTION SITES" NON-COMPLIANCE CAN RESULT IN FAILED INSPECTIONS OR STOP WORK FOR JOB LOCATIONS. THESE SAFETY PROTOCOLS WILL BE ENFORCED AT THE CONSTRUCTION SITE.

8. THE STRUCTURE WILL BE LOCATED ENTIRELY ON UNDISTURBED NATIVE SOIL. IF THE BUILDING INSEPCTOR SUSPECTS FILL, EXPANSIVE SOILS OR ANY GEOLOGIC [illegible]STABILITY BASED UPON OBSERVATION OF THE FOUNDATION [illegible]VATION, A SOILS OR GEOLOGIC REPORT, AND RESUBMITTAL [illegible]HE PLANS TO PLAN CHECK TO VERIFY THAT REPORT [illegible]ECOMMENDATIONS HAVE BEEN INCORPORATED, MAY BE REQUIRED.

3/29/2024, 1:38:28 PM
PRJ-1070918
Adrian Feral

AUTHORIZED AGENT

9. ALL STORM WATER RUNOFF FROM PROPOSED AND/OR REPLACED IMPERVIOUS AREAS SHALL BE ROUTED TO PERVIOUS SURFACES OR LANDSCAPING PRIOR TO REACHING THE PUBLIC DRAIN SYSTEM.

10. IF THE BUILDING INSPECTOR SUSPECTS FILL, EXPANSIVE SOILS OR ANY GEOLOGIC INSTABILITY BASED UPON OBSERVATION OF THE FOUNDATION EXCAVATION, A SOILS OR GEOLOGICAL REPORT, AND RESUBMITTAL OF PLANS TO PLAN CHECK TO VERIFY THAT REPORT RECOMMENDATIONS HAVE BEEN INCORPORATED, MAY BE REQUIRED.

11. NEW ROOF DOWNSPOUTS TO BE ROUTED TO EXISTING LANDSCAPING.

PACIFIC COAST
619-453-3142
INFO@PACIFICCOASTDRAFTING.COM

THE BALLOW RESIDENCE

3543 44TH ST

SAN DIEGO, CA 92105

ATTN:
CHRISTIAN BALLOW
619-207-7601
CHRISTIAN@GENEBOWMAN.COM

REVISIONS
3-29-23

PROJECT NO.
PRJ-1070918

PREPARER OF PLAN
ED MAHONY

A01

LEGEND:

- EX. WALL
- EX. WINDOW
- (d) SMOKE & CARBON MONOXIDE DETECTOR

EXISTING FLOOR PLAN - KEYED NOTES	
1 EX. ELEC. METER - 200 A	4 EX. WALL FURNACE
2 EX. GAS METER	5 EX. 40 GAL WATER HEATER
3 N/A	6

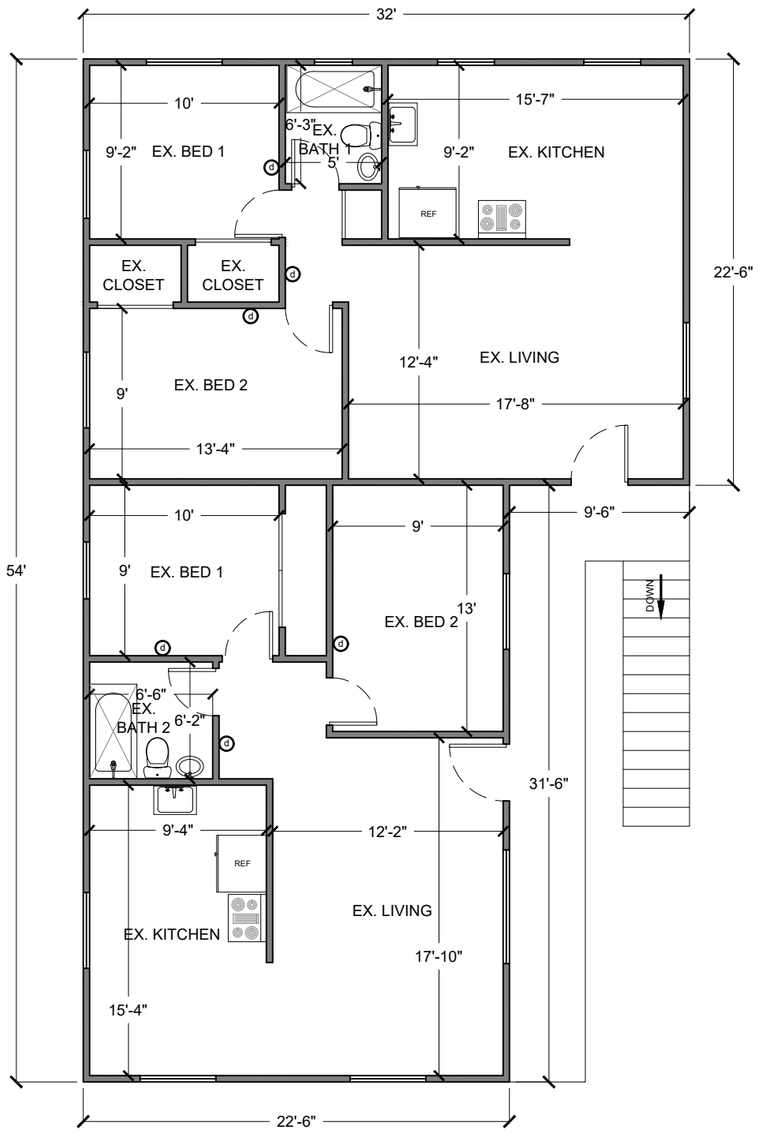

EXISTING FLOOR PLAN (UPPER-LEVEL)

SCALE: 1/8" = 1' (11X17)
SCALE: 1/4" = 1' (22X34)

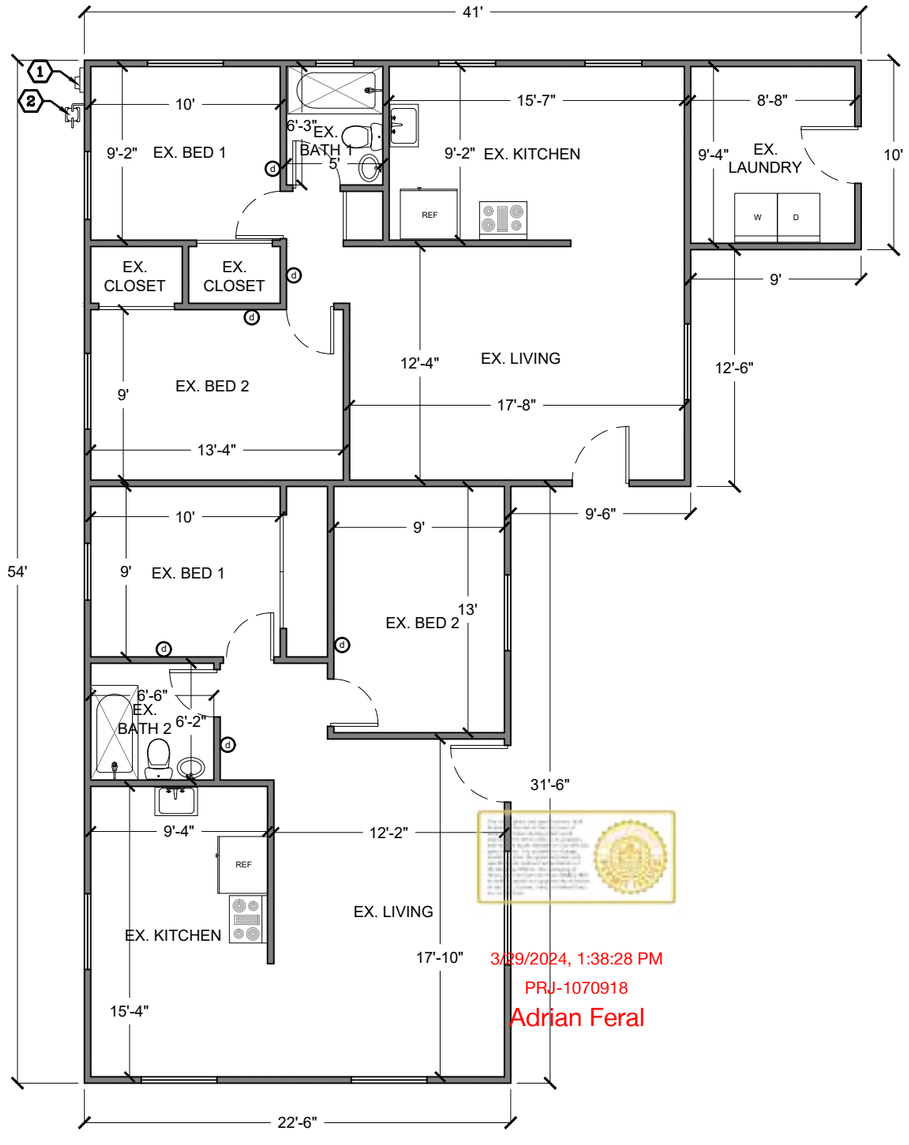

3/29/2024, 1:38:28 PM
PRJ-1070918
Adrian Feral

EXISTING FLOOR PLAN (LOWER-LEVEL)

SCALE: 1/8" = 1' (11X17)
SCALE: 1/4" = 1' (22X34)

PACIFIC COAST
619-453-3142
INFO@PACIFICCOASTDRAFTING.COM

THE BALLOW RESIDENCE

3543 44TH ST SAN DIEGO, CA 92105

ATTN:
CHRISTIAN BALLOW
619-207-7601
CHRISTIAN@GENEBOWMAN.COM

REVISIONS
3-29-23

PROJECT NO.
PRJ-1070918

PREPARER OF PLAN
ED MAHONY

A1

LEGEND:

- N. WALL
- EX. WALL
- WINDOW
- (d) SMOKE & CARBON MONOXIDE DETECTOR
- (#) N. DOOR TAG
- [#] N. WINDOW TAG
- FAN EXHAUST FAN (50 CFM)
- IAQ FAN (IAQ - CFM PER T24)
- EXHAUST FAN
- 1 48" SHEAR WALL PANEL
- *1 SHEAR WALL PANEL W/ HDU2 HOLD DOWN (1,800 LBF)
- HOSE BIBB

PROPOSED FLOOR PLAN - KEYED NOTES

1. MAX. 36"x36" MIN. LEVEL LANDING MAX. 7 3/4" BELOW THE THRESHOLD OF N. DOOR ENTRY (EA. SIDE OF DOOR) @ 2% SLOPE FOR PADS
2. N. LOUVERED DOOR
3. N. 100 AMP SUBPANEL

PROPOSED WINDOW SCHEDULE

LABEL	SIZE	AREA	QTY	PURPOSE, TYPE, MATERIAL, OPERATION	MANUFACTURER
1	4040	16	4	SINGLE-HUNG, VINYL, OPERABLE	HOME DEPOT
2	4050	20	1	EGRESS, SINGLE-HUNG, VINYL, OPERABLE	HOME DEPOT
3	3030	9	1	SINGLE-HUNG, VINYL, OPERABLE	HOME DEPOT
*4	2016	3	2	SINGLE-HUNG, VINYL, OPERABLE	HOME DEPOT
5	6020	12	1	SINGLE-HUNG, VINYL, OPERABLE	HOME DEPOT

PROPOSED DOOR SCHEDULE

LABEL	SIZE	AREA	QTY	TYPE, MATERIAL	MANUFACTURER
1	3068	20	1	SOLID CORE, VINYL	HOME DEPOT
2	2868	18	2	HOLLOW CORE, COMPOSITE	HOME DEPOT
3	2668	17	2	HOLLOW CORE, COMPOSITE	HOME DEPOT
4	2868	17	1	LOUVERED, COMPOSITE	HOME DEPOT

SHEARWALL SCHEDULE (CONTINUOUS WSP)

LABEL	MATERIAL AND NAILING DESCRIPTION	ANCHOR BOLT SCHEDULE & SILL PLATE SIZE	TOP PLATE SIZE & NAILING	SHEAR TRANSFER & RIM JOIST/BLK'G
1	3/8" WOOD STRUCTURAL PANEL W/ 8d @ 6"o.c. E.N. / 12" o.c. F.N.	2X P.T. SILL PLATE W ½" A.B. @36" O.C.	2X PLATE W/ 16d @ 6" o.c.	A35 OR LTP4 @24" o.c.

CONTINUOUS WSP WALL BRACING IN ACCORDANCE WITH CRC TABLE R602.10.4

GLASING: U-FACTOR = 0.30, SHGC = 0.23
*TEMPERED SAFETY GLAZING

WALL OPENING CALCULATION:

22 FT X 8 FT = 176 SF
176 SF X 0.25 = 44 SF MAX OPENING

20 SF + 3 SF = 23 SF OF WINDOW OPENING, OK.

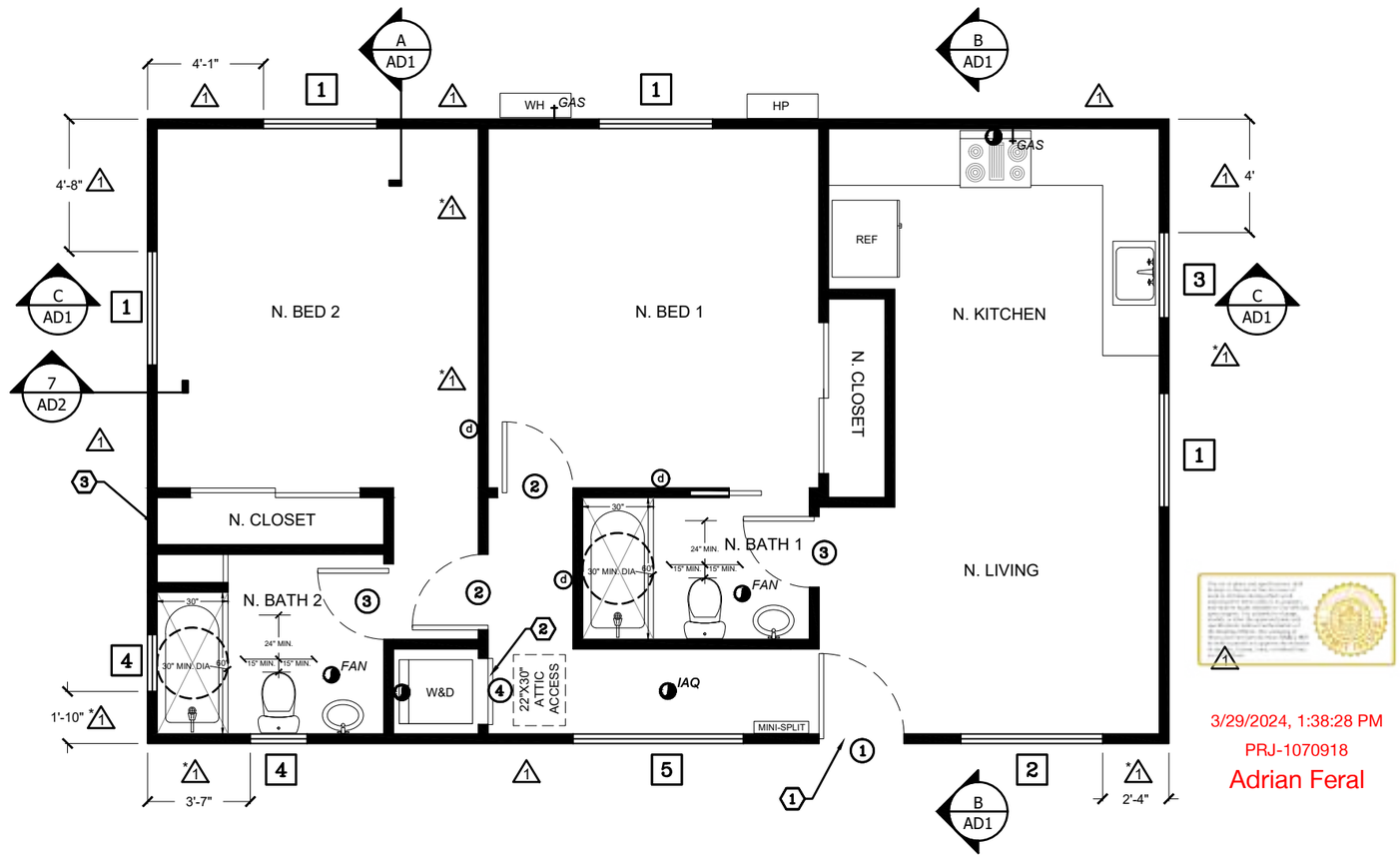

3/29/2024, 1:38:28 PM
PRJ-1070918
Adrian Feral

PROP. FLOOR PLAN (COMP. UNIT)

ENCLOSED AREA: 792 SF

SCALE: 3/16" = 1' (11X17)
SCALE: 3/8" = 1' (22X34)

PACIFIC COAST
619-453-3142
INFO@PACIFICCOASTDRAFTING.COM

THE BALLOW RESIDENCE

SAN DIEGO, CA 92105

3543 44TH ST

ATTN:
CHRISTIAN BALLOW
619-207-7601
CHRISTIAN@GENEBOWMAN.COM

REVISIONS
3-29-23

PROJECT NO.
PRJ-1070918

PREPARER OF PLAN
ED MAHONY

A2

LEGEND:

- N. WALL
- EX. WALL
- WINDOW

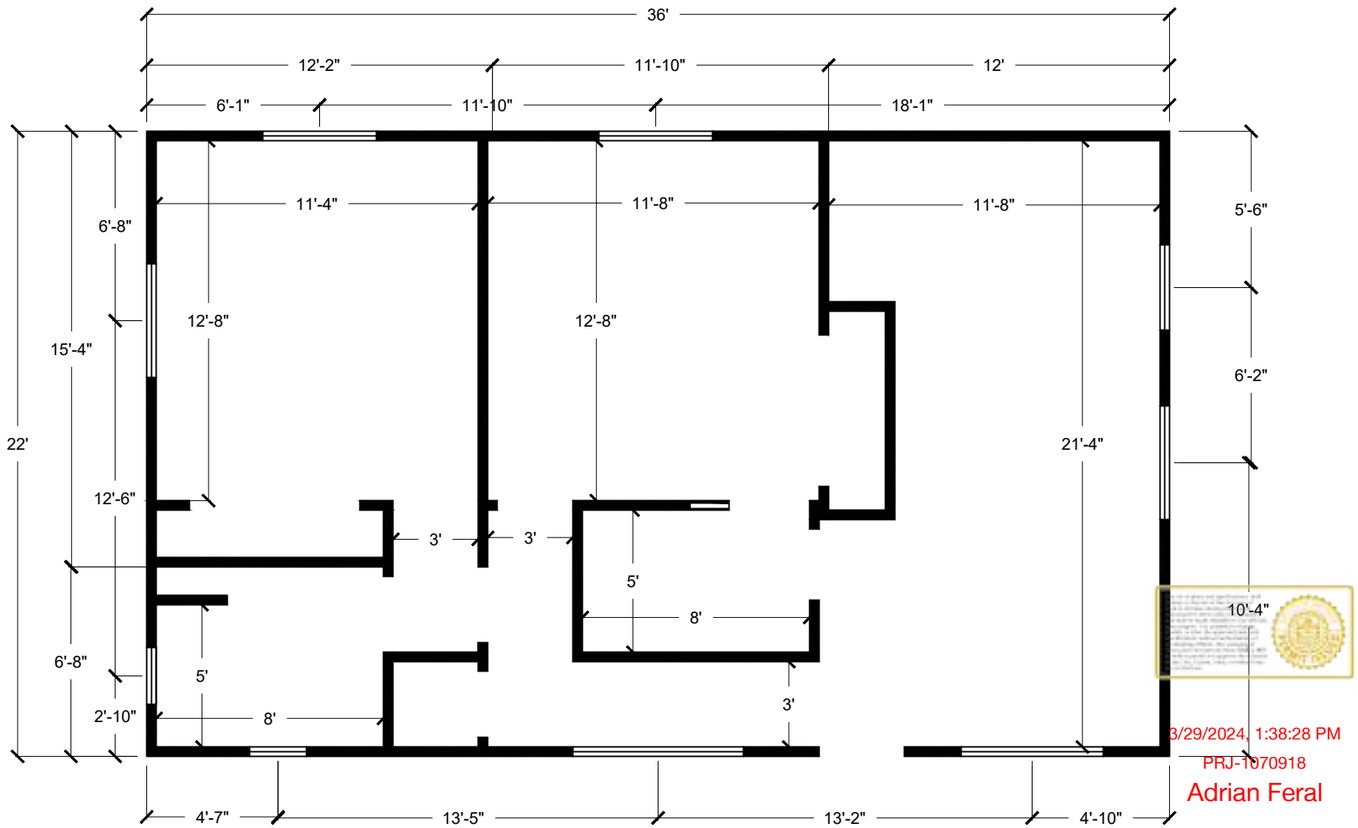

3/29/2024, 1:38:28 PM
PRJ-1070918
Adrian Feral

PROP. DIMENSION PLAN (COMP. UNIT)

SCALE: 3/16" = 1' (11X17)
SCALE: 3/8" = 1' (22X34)

PACIFIC COAST
619-453-3142
INFO@PACIFICCOASTDRAFTING.COM

THE BALLOW RESIDENCE

3543 44TH ST

SAN DIEGO, CA 92105

ATTN:
CHRISTIAN BALLOW
619-207-7601
CHRISTIAN@GENEBOWMAN.COM

REVISIONS
3-29-23

PROJECT NO.
PRJ-1070918

PREPARER OF PLAN
ED MAHONY

A3

LEGEND:

THICKENED EDGE FOOTING (12"x12")

48" SHEAR WALL PANEL

*SHEAR WALL PANEL W/ HDU2 HOLD DOWN (1,800 LBF)

SHEARWALL SCHEDULE (CONTINUOUS WSP)				
LABEL	MATERIAL AND NAILING DESCRIPTION	ANCHOR BOLT SCHEDULE & SILL PLATE SIZE	TOP PLATE SIZE & NAILING	SHEAR TRANSFER & RIM JOIST/BLK'G
1	3/8" WOOD STRUCTURAL PANEL W/ 8d @ 6"o.c. E.N. / 12" o.c. F.N.	2X P.T. SILL PLATE W ½" A.B. @36" O.C.	2X PLATE W/ 16d @ 6" o.c.	A35 OR LTP4 @24" o.c.

CONTINUOUS WSP WALL BRACING IN ACCORDANCE WITH CRC TABLE R602.10.4

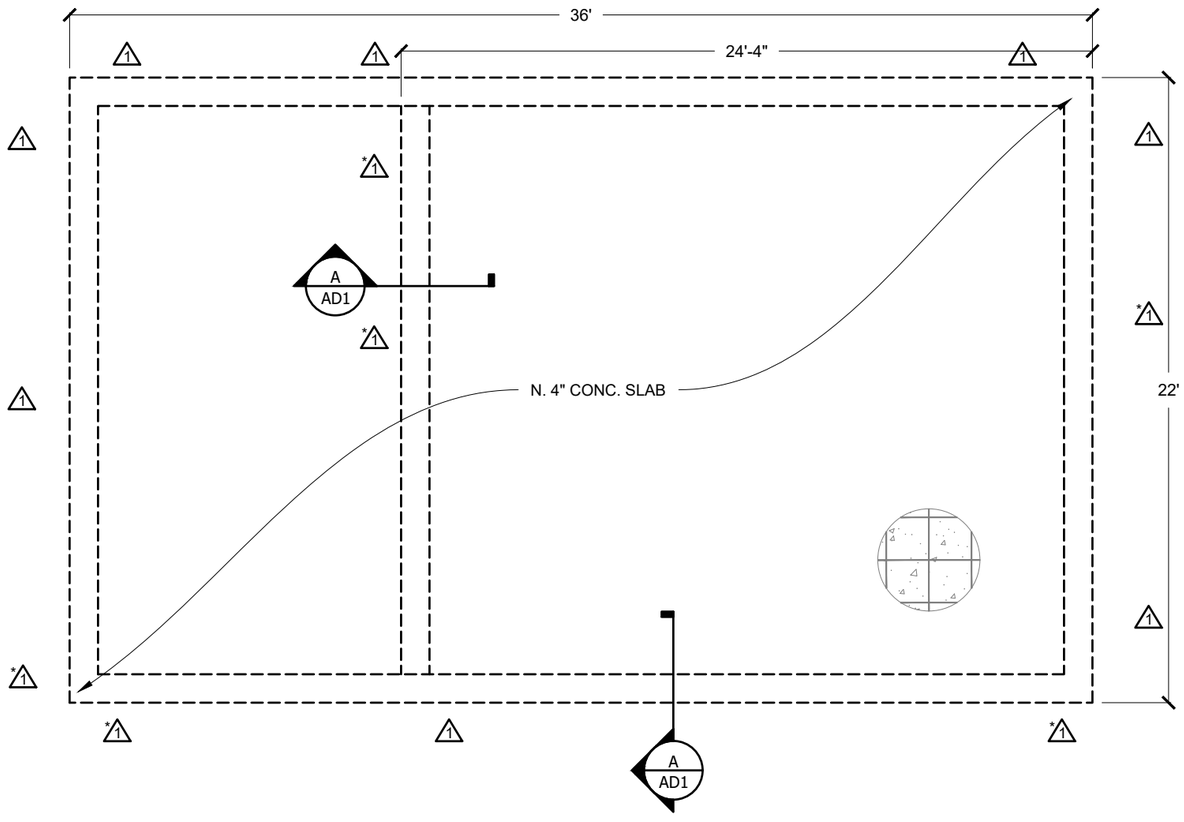

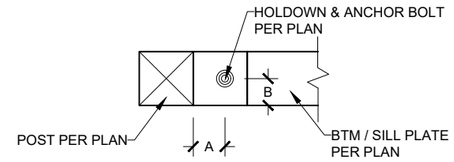

TOP VIEW

HOLDOWN	A	B	ANCHOR BOLT (U.N.O.)
HDU2	1-1/4"	1-3/4"	SSTB20 (16-5/8" MIN. EMB)
HDU4	1-1/4"	1-3/4"	SB-5/8X24 (18" MIN. EMB)
HDU5	1-1/4"	1-3/4"	SB-5/8X24 (18" MIN. EMB)
HDU8	1-1/4"	1-3/4"	SB-7/8X24 (18" MIN. EMB)
HDQ8	1-1/4"	1-3/4"	SB-7/8X24 (18" MIN. EMB)
HDUI4	1-9/16"	1-3/4"	SBIX30 (24" MIN. EMB)

NOTES:
A. HOLDOWN CONNECTORS INTO WOOD FRAMING REQUIRE APPROVED PLATE WASHERS
AND HOLDOWNS SHALL BE TIGHTENED JUST PRIOR TO COVERING THE WALL FRAMING.

B. INCREASE FOUNDATION DEPTH FOR ENTIRE SHEAR WALL LENGTH WHERE NECESSARY TO ACCOMMODATE THE REQUIRED ANCHOR BOLT EMBEDMENT & CLEARANCE. ANCHOR BOLTS SHALL BE 3" CLEAR FROM SOIL.

C. USE SIMPSON "CNW" COUPLER NUT & THRD'D ROD FOR RAISED WOOD FLOOR APPLICATIONS, PROVIDE 4X BLK'G UNDER POST.

D. REFER TO SIMPSON CATALOG FOR PROPER INSTALLATION REQUIREMENTS.

1 TYP. HOLDOWN PLACEMENT
NTS

3/29/2024, 1:38:28 PM
PRJ-1070918
Adrian Feral

PROP. FOUNDATION PLAN (COMP. UNIT)

SCALE: 3/16" = 1' (11X17)
SCALE: 3/8" = 1' (22X34)

PACIFIC COAST
619-453-3142
INFO@PACIFICCOASTDRAFTING.COM

THE BALLOW RESIDENCE

SAN DIEGO, CA 92105

3543 44TH ST

ATTN:
CHRISTIAN BALLOW
619-207-7601
CHRISTIAN@GENEBOWMAN.COM

REVISIONS
3-29-23

PROJECT NO.
PRJ-1070918

PREPARER OF PLAN
ED MAHONY

A4

LEGEND:

- EXTERIOR WALL
- ROOF RIDGE
- ROOF LINE
- ROOF VENT

ROOF / ATTIC VENTILATION
TOTAL ROOF AREA: 988 SF
TOTAL VENTS (1 VENT / 150 SF): 7 SF
TOTAL VENT SIZE: 0.84 SF
VENTS REQUIRED: 9 VENTS

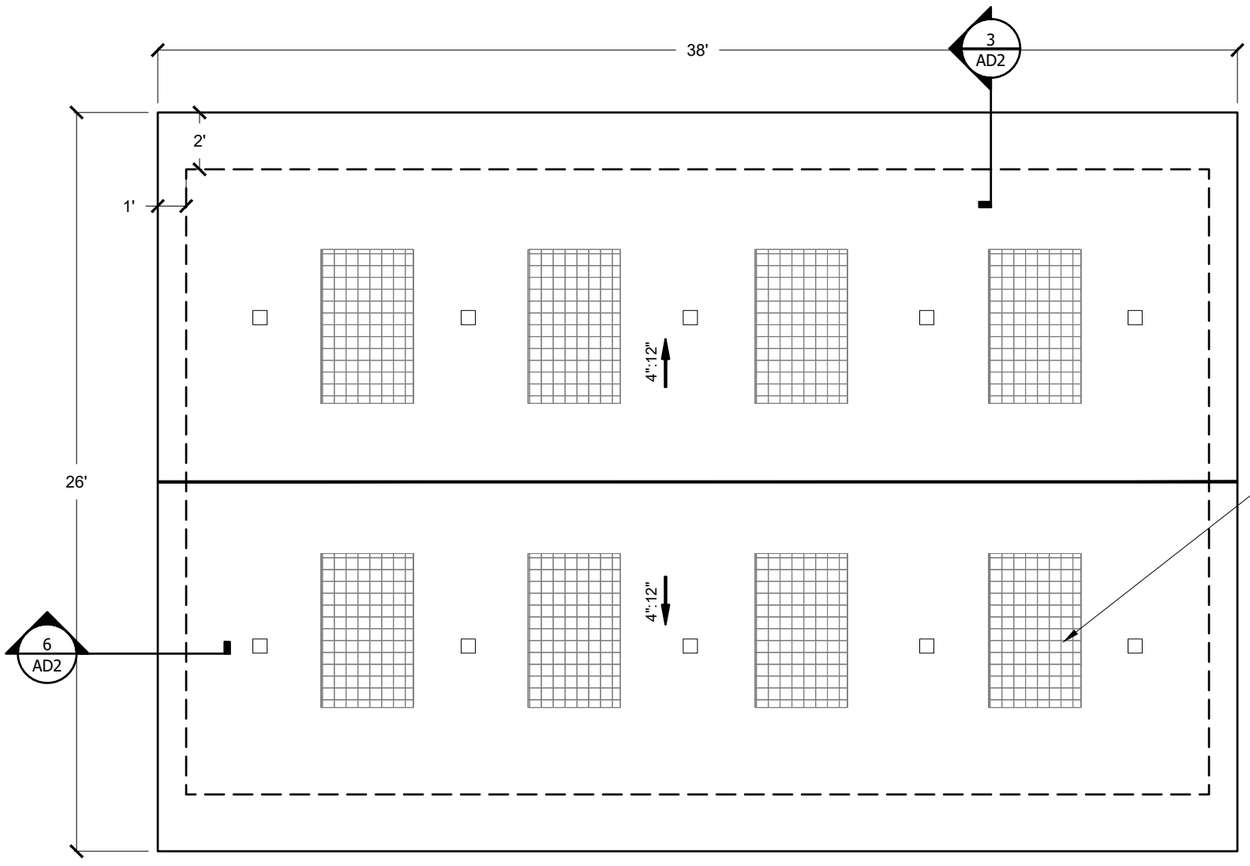

3/29/2024, 1:38:28 PM
PRJ-1070918
Adrian Feral

NOTES:
1. RADIANT BARRIER REQUIRED FOR ALL NEW ROOF AREAS.

PROP. ROOF PLAN (COMP. UNIT)

SCALE: 3/16" = 1' (11X17)
SCALE: 3/8" = 1' (22X34)

PACIFIC COAST
619-453-3142
INFO@PACIFICCOASTDRAFTING.COM

THE BALLOW RESIDENCE
3543 44TH ST
SAN DIEGO, CA 92105

ATTN:
CHRISTIAN BALLOW
619-207-7601
CHRISTIAN@GENEBOWMAN.COM

REVISIONS
3-29-23

PROJECT NO.
PRJ-1070918

PREPARER OF PLAN
ED MAHONY

A5

LEGEND:

- WALL
- WINDOW
- TRUSSES / RAFTERS PER PLAN
- ROOF RIDGE
- ROOF LINE
- HEADER
- 2X BRACING
- ROOF VENT
- 1 — 48" SHEAR WALL PANEL
- *1 — SHEAR WALL PANEL W/ HOLD DOWN (1,800 LBF)

SHEARWALL SCHEDULE (CONTINUOUS WSP)				
LABEL	MATERIAL AND NAILING DESCRIPTION	ANCHOR BOLT SCHEDULE & SILL PLATE SIZE	TOP PLATE SIZE & NAILING	SHEAR TRANSFER & RIM JOIST/BLK'G
1	3/8" WOOD STRUCTURAL PANEL W/ 8d @ 6"o.c. E.N. / 12" o.c. F.N.	2X P.T. SILL PLATE W/ ½" A.B. @36" O.C.	2X PLATE W/ 16d @ 6" o.c.	A35 OR LTP4 @24" o.c.

CONTINUOUS WSP WALL BRACING IN ACCORDANCE WITH CRC TABLE R602.10.4

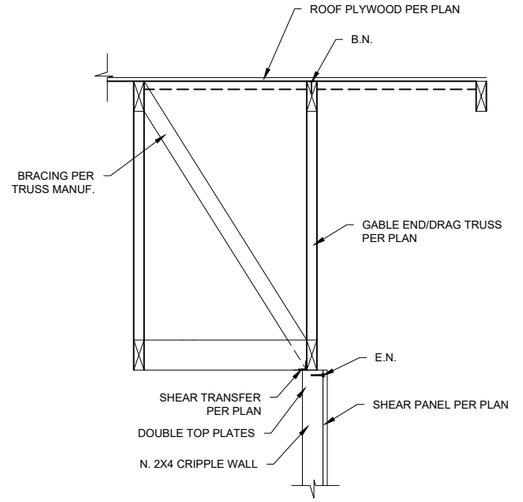

1 *SHEAR TRANSFER DETAIL (DRAG TRUSS)* NTS

NOTES:
1. SEE TRUSS PLANS

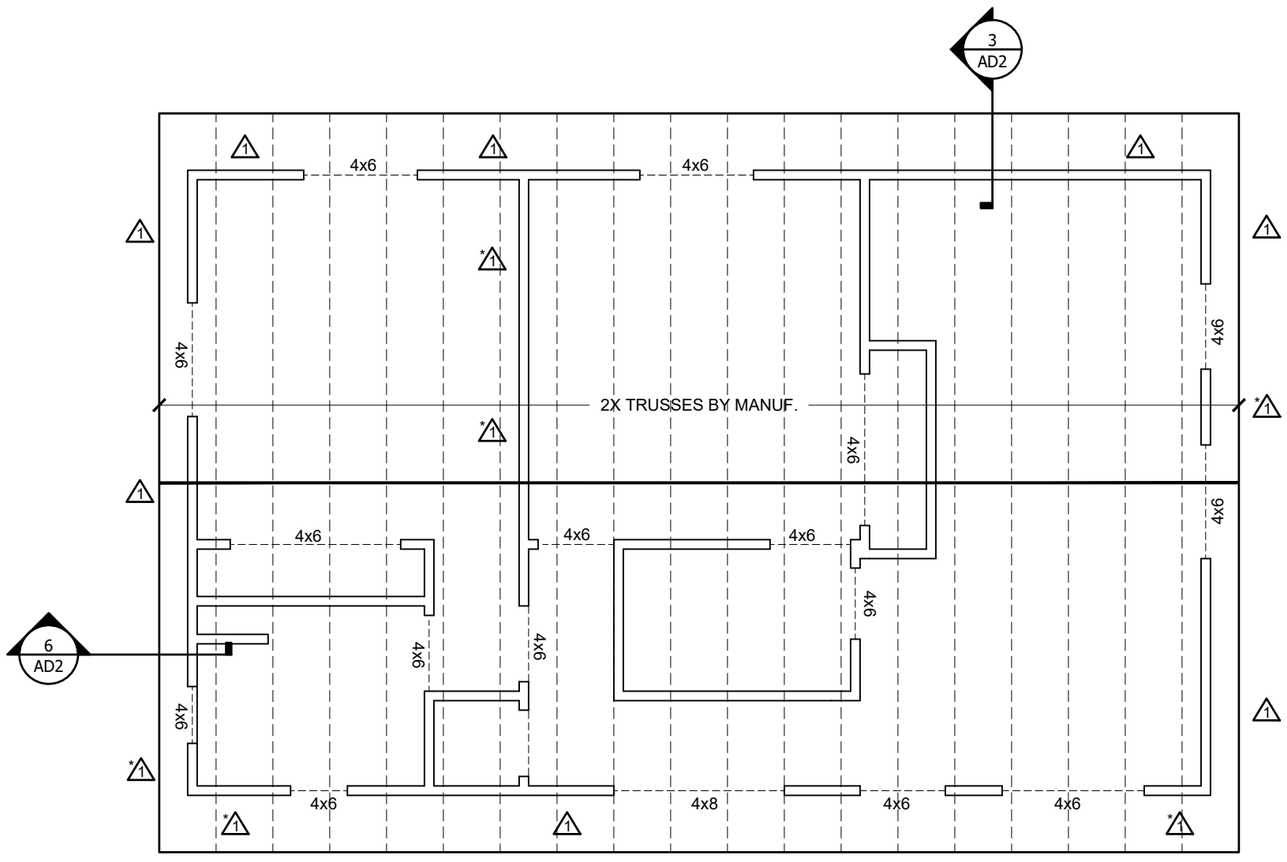

3/29/2024, 1:38:28 PM
PRJ-1070918
Adrian Feral

NOTES:
1. RADIANT BARRIER REQUIRED FOR ALL NEW ROOF AREAS.

PROP. ROOF FRAMING PLAN (COMP. UNIT)

SCALE: 3/16" = 1' (11X17)
SCALE: 3/8" = 1' (22X34)

PACIFIC COAST
619-453-3142
INFO@PACIFICCOASTDRAFTING.COM

THE BALLOW RESIDENCE

3543 44TH ST *SAN DIEGO, CA 92105*

ATTN:
CHRISTIAN BALLOW
619-207-7601
CHRISTIAN@GENEBOWMAN.COM

REVISIONS
3-29-23

PROJECT NO.
PRJ-1070918

PREPARER OF PLAN
ED MAHONY

A6

LEGEND:

- WALL
- WINDOW
- W — N. ½" WATER LINE (HOT & COLD)
- G — N. GAS LINE
- S — N. SEWER LINE
- CATV — N. CABLE LINE
- FAN — EXHAUST FAN (50 CFM)
- IAQ — FAN (IAQ - CFM PER T24)
- EXHAUST FAN
- GAS — GAS HUB
- HOSE BIBB
- (d) SMOKE ALARM & CARBON MONOXIDE DETECTOR

MEP -KEYED NOTES

1. N. VENT PIPE
2. N. EXHAUST FAN ROUTED DIRECTLY OVERHEAD - 50 CFM
3. N. RANGE HOOD ROUTED DIRECTLY OVERHEAD - 100 CFM
4. N. 4" EXHAUST FAN ROUTED DIRECTLY OVERHEAD
5. N. IAQ FAN - 46 CFM
6. N. WATER HEATER - RHEEM, TANKLESS #ECO200XLN3-1, GAS
7. N. MINI-SPLIT - ACPRO - #AWH24QE-D3DNA3D, 24,000 BTU
8. N. HEAT PUMP - ACPRO #AWH24QE-D3DNA5K, 24,000 BTU, SEER 14, EER 11.7
9. N. SEWER & WATER & GAS TO CONNECT TO EX. LINES
10. N. ELEC. SUBPANEL - 100 AMPS

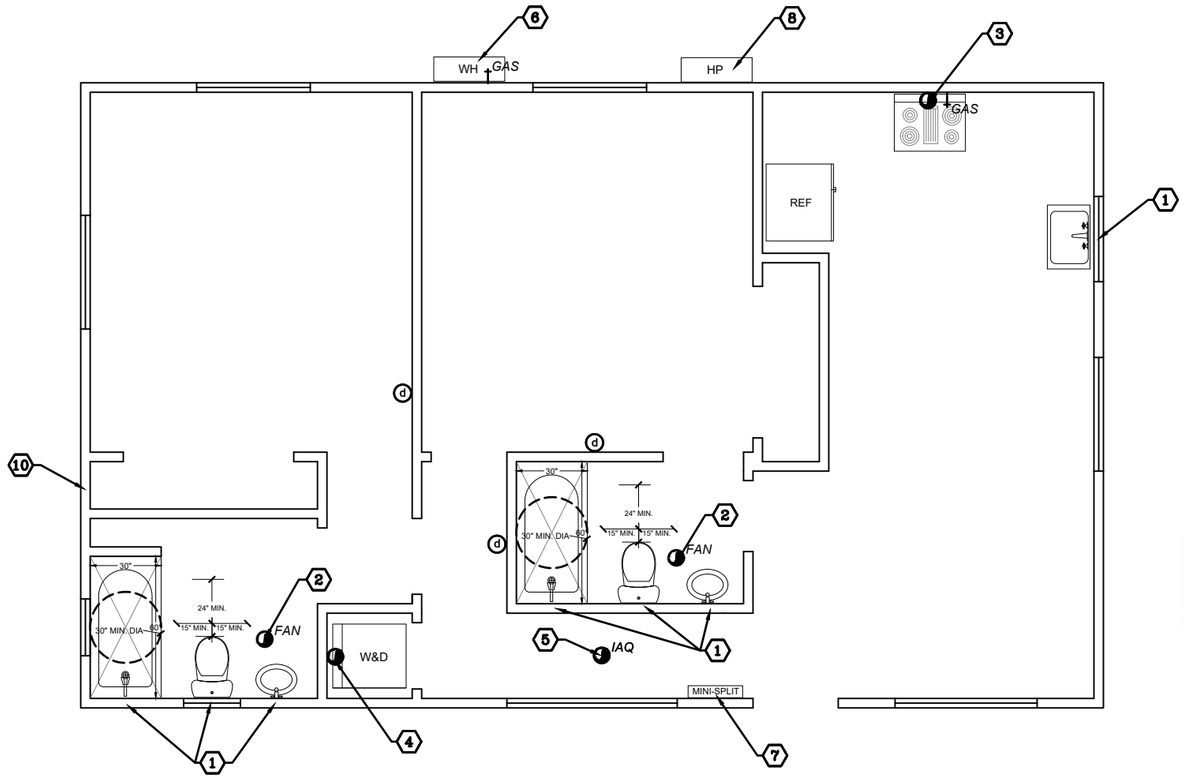

3/29/2024, 1:38:28 PM
PRJ-1070918
Adrian Feral

PROP. MEP PLAN 1 (COMP. UNIT)

SCALE: 3/16" = 1' (11X17)
SCALE: 3/8" = 1' (22X34)

PACIFIC COAST
619-453-3142
INFO@PACIFICCOASTDRAFTING.COM

THE BALLOW RESIDENCE

SAN DIEGO, CA 92105

3543 44TH ST

ATTN:
CHRISTIAN BALLOW
619-207-7601
CHRISTIAN@GENEBOWMAN.COM

REVISIONS
3-29-23

PROJECT NO.
PRJ-1070918

PREPARER OF PLAN
ED MAHONY

A7

LEGEND:

- WALL / CEILING FIXTURE
- RECESSED FIXTURE - LED
- DUPLEX RECEPTACLE
- COUNTERTOP DUPLEX RECEPTACLE (42" HEIGHT)
- G — GROUND-FAULT-CIRCUIT INTERRUPTED
- A — ARC-FAULT-CIRCUIT INTERRUPTED
- 220 — 220 VOLT RECEPTACLE
- WP — WEATHER PROOF RECEPTACLE
- CEILING MOUNTED FAN WITH DEHUMMER
- ELECTRICAL SWITCH (HIGH EFFICACY LIGHTING)
- m — MANUAL HIGH EFFICACY EXTERIOR MOTION SENSOR SWITCH WITH PHOTOCONTROL
- v — VACANCY SENSOR (HIGH EFFICACY LIGHTING)
- d — DIMMER SWITCH ((HIGH EFFICACY LIGHTING)
- FAN — EXHAUST FAN (50 CFM)
- IAQ — EXHAUST FAN (IAQ-CFM PER T24)
- EXHAUST FAN
- d — SMOKE ALARM & CARBON MONOXIDE DETECTOR
- J — CABLE JACK

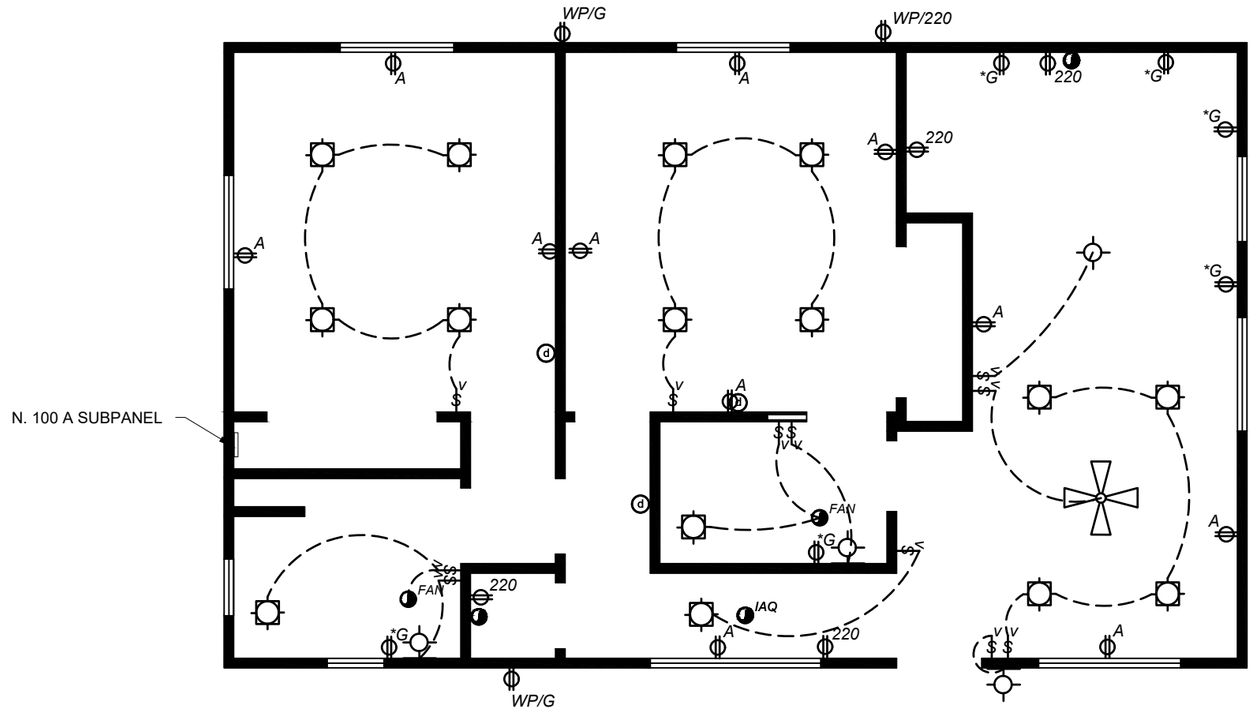

3/29/2024, 1:38:28 PM
PRJ-1070918
Adrian Feral

PROP. MEP PLAN 2 (COMP. UNIT)

SCALE: 3/16" = 1' (11X17)
SCALE: 3/8" = 1' (22X34)

PACIFIC COAST
619-453-3142
INFO@PACIFICCOASTDRAFTING.COM

THE BALLOW RESIDENCE

3543 44TH ST

SAN DIEGO, CA 92105

ATTN:
CHRISTIAN BALLOW
619-207-7601
CHRISTIAN@GENEBOWMAN.COM

REVISIONS
3-29-23

PROJECT NO.
PRJ-1070918

PREPARER OF PLAN
ED MAHONY

A8

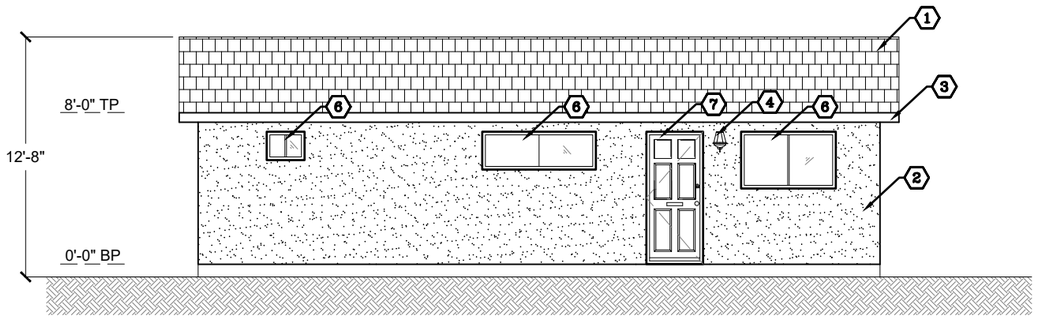

WEST ELEVATION

SCALE: 1/8" = 1' (11X17)
SCALE: 1/4" = 1' (22X34)

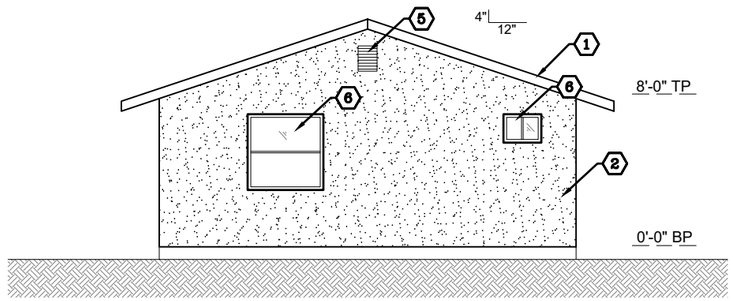

NORTH ELEVATION

SCALE: 1/8" = 1' (11X17)
SCALE: 1/4" = 1' (22X34)

CONSTRUCTION MATERIALS - KEYED NOTES	
1	N. CLASS-A ROOFING ASSEMBLY - ASPHALT SHINGLES ESR-3267
2	N. STUCCO SIDING
3	N. 2X6 FASCIA W/ SAWN WOOD STARTER BOARDS & RAKE DRIP EDGE FLASHING
4	N. EXTERIOR LIGHT
5	N. ATTIC VENT
6	N. WINDOW
7	N. DOOR

NOTES:

1. TWO LAYERS WATER-RESISTIVE "HARDIE WRAP" OR EQUIVALENT WHERE EXTERIOR PLASTER APPLIED OVER BRACED PANEL OR SHIM SHEATHING. EACH LAYER TO BE INSTALLED AS INDEPENDENT SEPARATE CONTINUOUS LAYER.
2. ROOFING ASPHALT SATURATED FELT UNDERLAYMENT REQUIRED FOR ASPHALT SHINGLE ROOFING APPLIED TO ROOF SLOPES BETWEEN 4:12 AND 2:12.
3. INSTALL SAWN-WOOD STARTER BOARDS PLANKING AT EAVES AND RAKES WHERE EXPOSED TO OUTDOORS.
4. ATTIC VENTILATION OPENINGS MUST BE INSTALLED WITH CORROSION-RESISTANT WIRE MESH WITH MESH OPENINGS OF NOT LESS THAN 1/16" AND NOT MORE THAN 1/8" IN SIZE.
5. ATTIC VENTILATION OPENINGS SHALL NOT BE LOCATED IN SOFFITS, EAVE OVERHANGS, BETWEEN RAFTERS AT EAVES, OR IN OTHER OVERHANG AREAS.
6. ROOF GUTTERS SHALL BE PROVIDED WITH THE MEANS TO PREVENT THE ACCUMULATION OF LEAVES AND DEBRIS IN THE GUTTER. ALL ROOF GUTTERS AND DOWNSPOUTS SHALL BE CONSTRUCTED OF NON-COMBUSTIBLE MATERIALS.
7. TURBINE ATTIC VENTS SHALL BE EQUIPPED TO ALLOW ONE-WAY DIRECTION ROTATION ONLY AND SHALL NOT FREE SPIN IN BOTH DIRECTIONS.
8. GLAZING FRAMES MADE OF VINYL MATERIALS SHALL HAVE WELDED CORNERS, METAL REINFORCEMENT IN THE INTERLOCK AREA, AND BE CERTIFIED TO THE MOST CURRENT EDITION OF ANSI/AAMA/NWWDA 101/I.S.2 STRUCTURAL REQUIREMENTS.
9. INDIVIDUAL VENT OPENINGS SHALL NOT EXCEED 144 SQUARE INCHES. THE DIMENSION OF THE OPENINGS SHALL BE A MINIMUM OF 1/16 INCH AND SHALL NOT EXCEED 1/8" INCH.

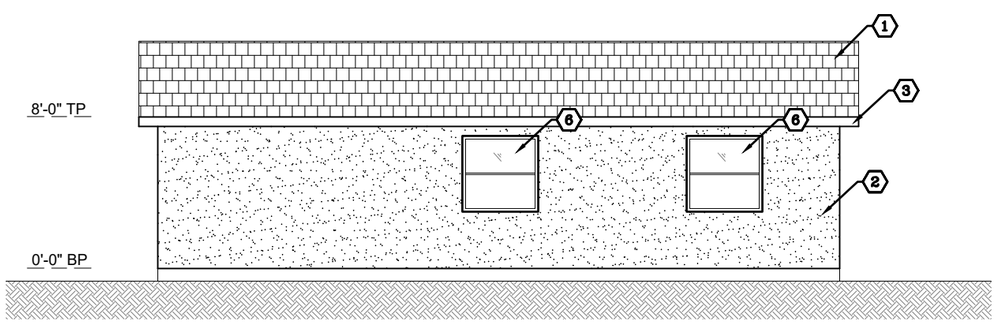

EAST ELEVATION

SCALE: 1/8" = 1' (11X17)
SCALE: 1/4" = 1' (22X34)

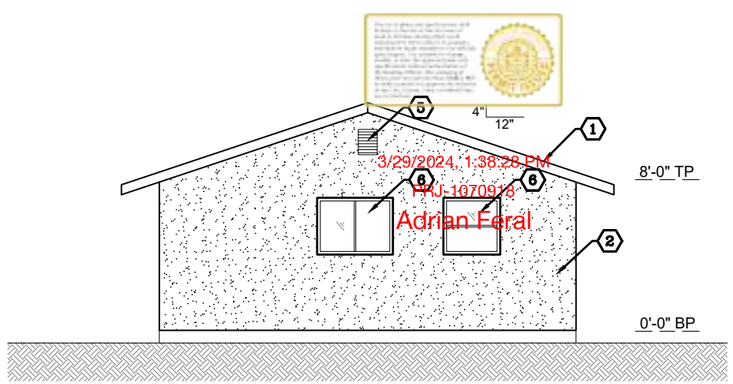

SOUTH ELEVATION

SCALE: 1/8" = 1' (11X17)
SCALE: 1/4" = 1' (22X34)

PACIFIC COAST
619-453-3142
INFO@PACIFICCOASTDRAFTING.COM

THE BALLOW RESIDENCE

3543 44TH ST SAN DIEGO, CA 92105

ATTN:
CHRISTIAN BALLOW
619-207-7601
CHRISTIAN@GENEBOWMAN.COM

REVISIONS
3-29-23

PROJECT NO.
PRJ-1070918

PREPARER OF PLAN
ED MAHONY

A9

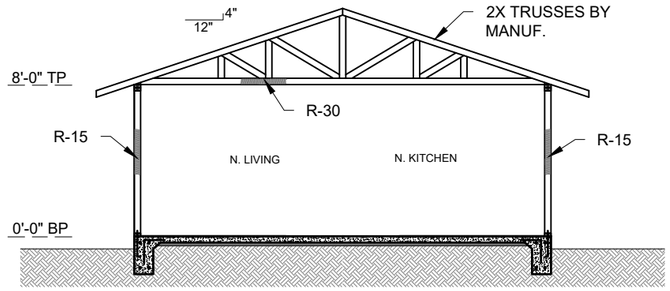

SECTION B

SCALE: 1/8" = 1' (11X17)
SCALE: 1/4" = 1' (22X34)

NOTES:
1. RADIANT BARRIER REQUIRED FOR ALL NEW ROOF AREAS.

NAILING SCHEDULE		
CONNECTION	FASTENING	REMARKS
ROOF		
BLOCKING BETWEEN JOISTS OR RAFTERS TO TOP PLATE	3-8d (2-1/2" X 0.113")	TOE NAIL
CEILING TO TOP PLATE	3-8d (2-1/2" X 0.113")	TOE NAIL
CEILING JOIST NOT ATTACHED PARALLEL RAFTER, LAPS OVER PARTITIONS	3-10d (3" X 0.128")	TOE NAIL
COLLAR TIE RAFTER, FACE NAIL OR 20-GAGE RIDGE STRAP	3-10d (3" X 0.128")	
RAFTER TO PLATE	2-16d (3-1/2" X 0.135)	TOE NAIL
ROOF RAFTERS TO RIDGE, VALLEY OR HIP RAFTERS: TOE NAIL FACE NAIL	4-16d (3-1/1" X 0.135") 3-16d (3-1/2" X 0.135")	
WALL		
BUILT-UP CORNER STUDS	10d (3" X 0.128")	24" O.C.
BUILT-UP HEADER TWO PIECES WITH 1/2" SPACER	16d (3-1/1" X 0.135")	16" O.C. ALONG EACH EDGE
CONTINUED HEADER TWO PIECE	16d (3-1/1" X 0.135")	16" O.C. ALONG EACH EDGE
CONTINUOUS HEADER TO STUD	4-8d (2-1/2" X 0.113")	TOE NAIL
DOUBLE STUDS	10d (3" X 0.128")	24" O.C.
DOUBLE TOP PLATES	10d (3" X 0.128")	24" O.C. FACE NAIL
DOUBLE TOP PLATES, MINIMUM 24-INCH OFFSET OF END JOINTS, FACE NAIL IN LAPPED AREA	8-16d (3-1/1" X 0.135")	FACE NAIL
SOLE PLATE TO JOIST OR BLOCKING	16d (3-1/1" X 0.135")	16" O.C. FACE NAIL
SOLE PLATE TO JOIST OR BLOCKING AT BRACED WALL PANELS	3 -16d (3-1/1" X 0.135")	16" O.C.
STUD TO SOLE PLATE	3-8d (2-1/2" X 0.113") OR 2-16d (3-1/1" X 0.135")	TOE NAIL
TOP OR SOLE PLATE TO STUD	2-16d (3-1/2" X 0.135")	END NAIL
TOP PLATES, LAP AT CORNERS AND INTERSECTIONS	2-10d (3" X 0.128")	FACE NAIL
FLOOR		
JOIST TO SILL OR GIRDER	3-8d (2-1/2" X 0.113")	TOENAIL
RIM JOIST TO TOP PLATE (ROOF APPLICATION ALSO)	8d (2-1/2" X 0.113")	6" O.C.
BUILT-UP GIRDERS AND BEAMS, 2-INCH LUMBER LAYERS	10d (3" X 0.128")	NAIL EACH LAYER AS FOLLOWS: 32" O.C. AT TOP AND BOTTOM AND STAGGERED. TWO NAILS AT ENDS AND AT EACH SPLICE
LEDGER-STRIP SUPPORTING JOISTS OR RAFTERS	3-16d (3d (3-1/2" X 0.135")	AT EACH JOIST AFTER RAFTER

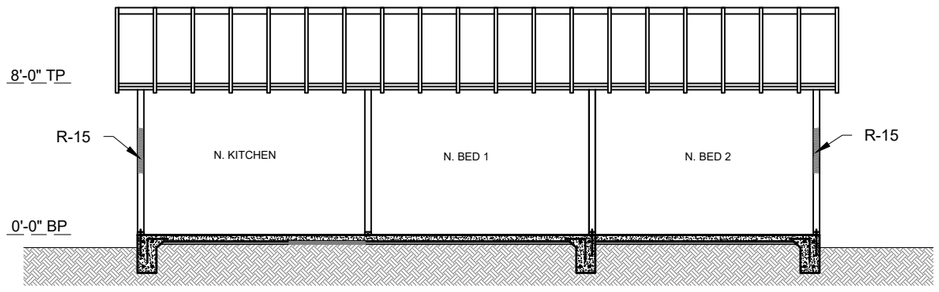

SECTION C

SCALE: 1/8" = 1' (11X17)
SCALE: 1/4" = 1' (22X34)

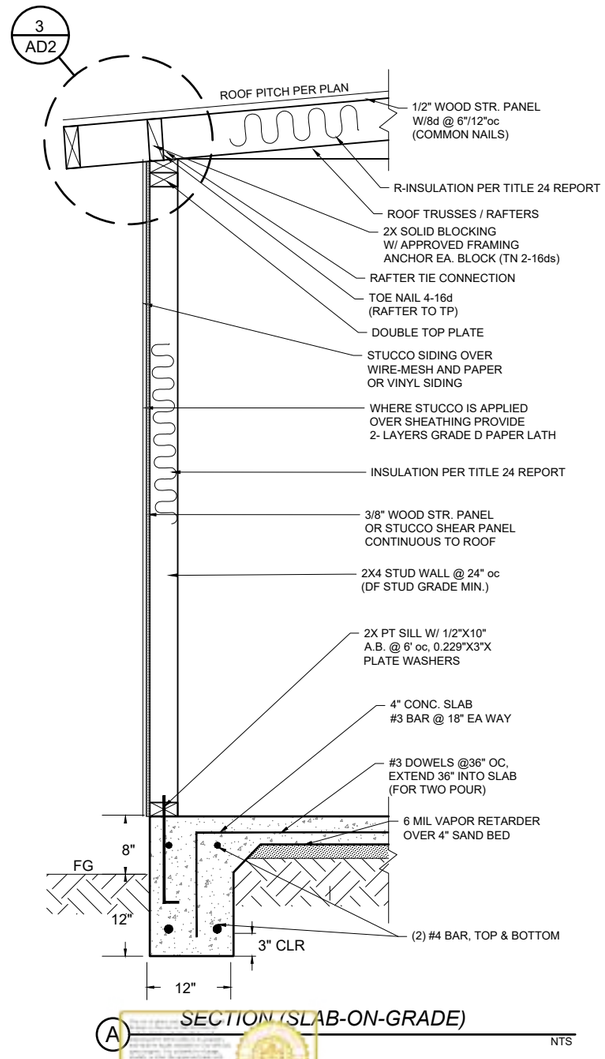

A SECTION (SLAB-ON-GRADE)
NTS

NOTES:
1. CONCRETE COMPRESSIVE STRENGTH MIN. 2,500 PSI
2. ANCHOR BOLTS ∓ X 10" EMBEDDED 7" AND SPACED MAX 6' WITH 3" X 3" X 0.229" PLATE WASHERS, MINIMUM 2 ANCHOR BOLTS PER PIECE, LOCATED NOT MORE THAN 12" OR LESS THAN 4" FROM EACH END OF THE PIECE.
3. ALL FOUNDATION PLATES OR SILLS AND SLEEPERS ON A CONCRETE OR MASONRY SLAB, WHICH IS DIRECT CONTACT WITH EARTH, AND SILLS THAT REST ON CONCRETE OR MASONRY FOUNDATIONS SHALL BE PRESERVATIVE TREATED WOOD (AWPA U1) AND FIELD CUT ENDS, NOTCHES, AND DRILLED HOLES SHALL BE FIELD TREATED IN ACCORDANCE AWPA M4. FASTENERS (OTHER THAN ANCHOR BOLTS) IN PRESERVATIVE TREATED WOOD OR FIRE RETARDANT TREATED WOOD SHALL BE OF HOT DIPPED ZINC COATED GALVANIZED STEEL OR STAINLESS STEEL.
4. EXTERIOR WALLS, BEARING WALLS AND BRACED WALL PANELS REQUIRE CONTINUOUS FOOTINGS.
5. 23"/32" PLYWOOD REQUIRED FOR 24" JOIST SPACING.
6. WHERE INTERIOR WALLS ARE SHEAR WALLS, WALL FRAMING AND SHEATHING SHALL EXTEND TO THE ROOF SHEATHING.
7. EXTERIOR PLASTER WALLS SHALL BE PROVIDED WITH CORROSION RESISTANT WEEP SCREED COMPLYING WITH SECTION R703.6.2.1.
8. INSTALL SAWN-WOOD STARTER BOARDS PLANKING AT EAVES AND RAKES WHERE EXPOSED TO OUTDOORS.
9. INSTALL ALL CONNECTORS & COMPONENTS PER MANUFACTURERS SPECIFICATIONS.
10. ENCLOSED RAFTER SPACES DO NOT REQUIRE VENTING IF THE FOLLOWING INSULATION DESIGN IS USED PER SECTION R806.5/EM3.9.6
    A. IF THE INSULATION IS AIR-PERMEABLE AND IT IS INSTALLED DIRECTLY BELOW THE ROOF SHEATHING WITH RIGID BOARD OR SHEET INSULATION WITH A MINIMUM R-5 VALUE INSTALLED ABOVE THE ROOF SHEATHING.
    B. IF THE INSULATION IS AIR-PERMEABLE AND IT IS IN DIRECT CONTACT WITH THE UNDERSIDE OF THE ROOF SHEATHING. (OR)
    C. IF TWO LAYERS OF INSULATION ARE INSTALLED BELOW THE ROOF SHEATHING: AN AIR-PERMEABLE LAYER IN DIRECT CONTACT WITH THE UNDERSIDE OF THE ROOF SHEATHING AND AN ADDITIONAL LAYER OF AIR PERMEABLE INSULATION INSTALLED DIRECTLY UNDER THE AIR-IMPERMEABLE INSULATION.
11. SEE UFER GROUND. DO NOT CUT

2/29/2024 1:20:28 PM
PRJ-1070918
Adrian Feral

PACIFIC COAST
619-453-3142
INFO@PACIFICCOASTDRAFTING.COM

THE BALLOW RESIDENCE
3543 44TH ST
SAN DIEGO, CA 92105

ATTN:
CHRISTIAN BALLOW
619-207-7601
CHRISTIAN@GENEBOWMAN.COM

REVISIONS
3-29-23

PROJECT NO.
PRJ-1070918

PREPARER OF PLAN
ED MAHONY

AD1

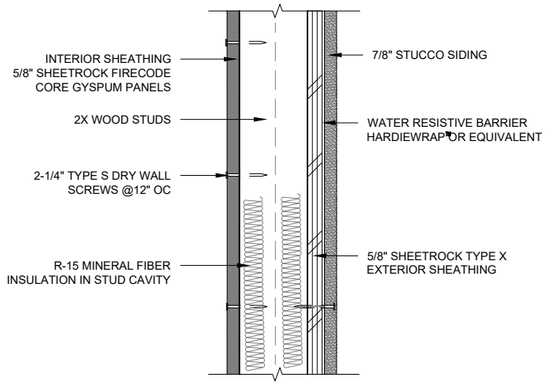

7 EXTERIOR WALL ASSEMBLY

UL DES U305, U314

2x4 WOOD STUDS AT 16" WITH DOUBLE TOP PLATES, SINGLE BOTTOM PLATE, INTERIOR AND EXTERIOR SIDES COVERED WITH 5/8" TYPE X GYPSUM WALL BOARD, 4' WIDE, APPLIED VERTICALLY WITH ALL JOINTS OVER FRAMING OR BLOCKING AND FASTENED WITH 2-1/4" TYPE S DRYWALL SCREWS, SPACED 12" OC, R-19 MINERAL FIBER INSULATION INSTALLED IN STUD CAVITY.

STUD	BEARING & EXT. WALL		NON-BEARING	
	"N"	"D"	"N"	"D"
2x4	2"	1⅜"	1⅜"	"2"
2x6	1⅜"	2¼"	2¼"	3¼"
2x8	1⅞"	"3"	"3"	4½"
2x10	2⅜"	3¼"	3¼"	5¼"

NOTES:
1. ONLY ONE MAX. SIZE NOTCH OR BORED HOLE IS ALLOWED PER STUD

2. BORED HOLES SHALL NOT BE LOCATED IN THE SAME SECTION OF STUD AS A CUT OR NOTCH.

3. NON-BEARING WALL IS DEFINED AS A WALL SUPPORTING NO LOAD OTHER THAN ITS OWN WEIGHT.

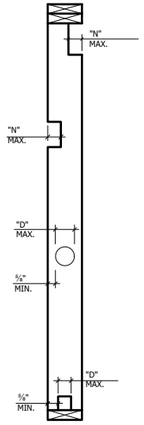

4 BORED HOLE IN STUD DETAIL

NTS

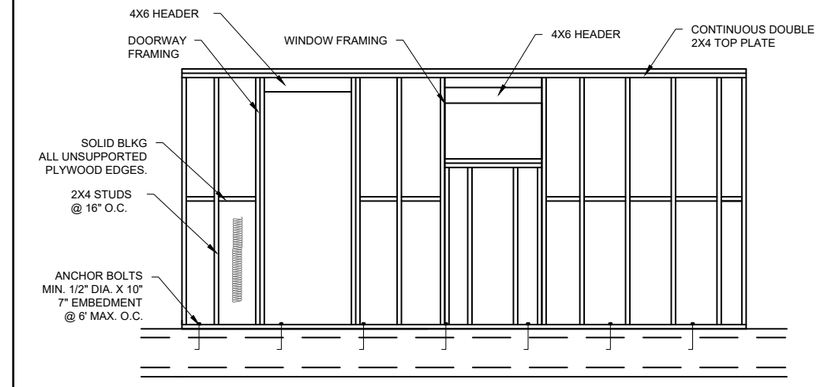

1 TYPICAL FRAMING DETAIL

NTS

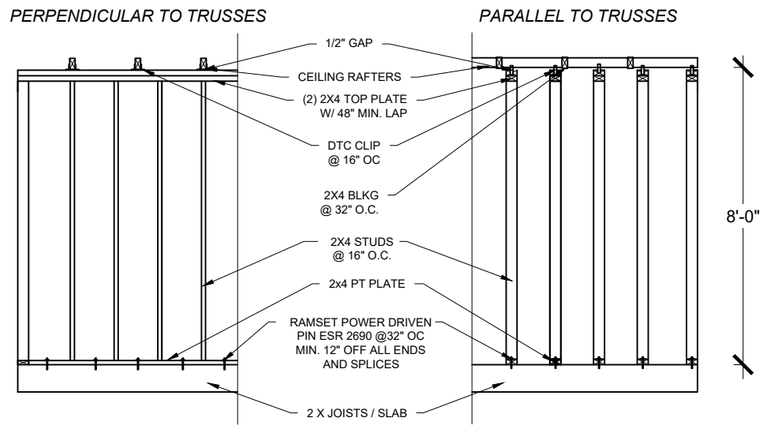

NOTE: USE 8d AT CENTER OF SLOT.

2 NON-LOAD BEARING WALL PARTITION

NTS

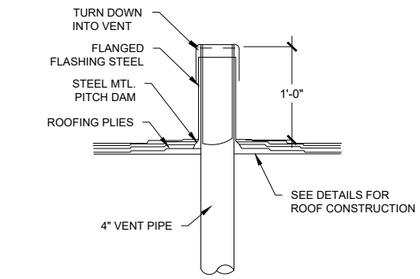

5 VENT THROUGH ROOF DETAIL

NTS

NOTE: EXTEND VENT THROUGH ROOF A MIN. OF 1'-0" ABOVE FINISHED ROOF AND 1'-0" FROM ANY VERTICAL SURFACE

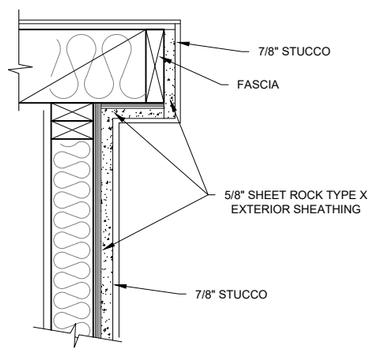

6 FASCIA PROTECTED (FIRE-PROTECTED GABLE EAVE)

NTS

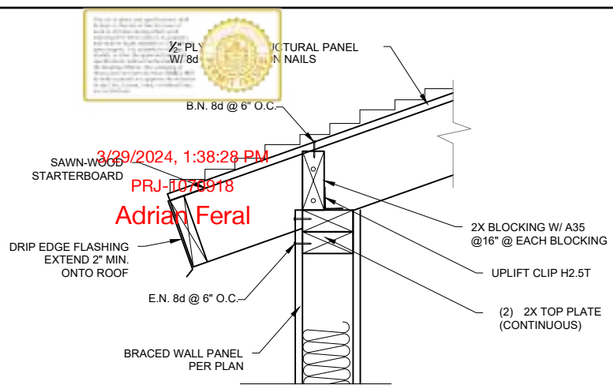

3 ROOF FRAMING DETAIL

NTS

NOTES:
1. INSTALL SAWN-WOOD STARTER BOARDS PLANKING AT EAVES AND RAKES WHERE EXPOSED TO OUTDOORS.

PACIFIC COAST
619-463-3142
INFO@PACIFICCOASTDRAFTING.COM

THE BALLOW RESIDENCE

3543 44TH ST

SAN DIEGO, CA 92105

ATTN:
CHRISTIAN BALLOW
619-207-7601
CHRISTIAN@GENEBOWMAN.COM

REVISIONS
3-29-23

PROJECT NO.
PRJ-1070918

PREPARER OF PLAN
ED MAHONY

AD2

General/ Special Subjects

Prop D/ Coastal Height Limitation Overlay Zone (if applicable to project)

- The highest point of the roof, equipment, or any vent, pipe, antenna or other projection shall not exceed 30 feet above base of measurement (reference datum). [SDMC Section 132.0505]
- A pre-construction inspection is required due to the height of the proposed structure being within one foot of the maximum height of/owed in the Coastal Height Limit Overlay Zone (Proposition D).

FAA Part 77 Notification (if applicable to project)

- FAA Self Certification option:

The City will not require notification to the FAA if a professional, licensed by the state of California to prepare construction documents, provides the following certification on their plans, along with their signature and registration stamp:

"I_____ do hereby certify that the structure(s) or modification to existing structure(s) shown on these plans do not require Federal Aviation Administration notification because per Section 77.15 (a) of Title 14 of the Code of Federal Regulations CFR Port 77, notification is not required. H

- A pre-construction inspection is required due to the height of the proposed structure in relation to the FAA Part 77 Notification Surface requirements. The pre-construction inspection must be scheduled and cleared by the field inspector before any subsequent inspections can be scheduled. Call (858) 581-7111 to schedule the pre-construction inspection. Contact the Inspection Services office at (858) 492-5070, if you have any questions pertaining to the pre-construction inspection.

Deferred Submittal (general)

- Plans for the deferred submittal items shall be submitted in a timely manner but not less than 30 business days prior to installation for City review and approval.
- The deferred submittal items shall not be installed until their design and submittal documents have been approved by the Building Official. [SDI.IC §129.0205]
- The registered and responsible design professional shall review the deferred submittal documents and submit them to the Building Official, with annotation indicating that the deferred submittal documents have been reviewed and found to be in general conformance to the design of the building. [SDI.IC §129.0205]

Deferred Submittal (NFPA 13D Fire Sprinkler)

- The submittal of residential fire sprinkler plans required by California Residential Code Section R313 has been deferred.
- To avoid delays in construction, plans for fire sprinkler plans shall be submitted not less than 30 calendar days prior to installation or prior to requesting a foundation inspection. A framing/rough inspection shall not be requested prior to approval of the fire sprinkler plans.

Special Inspections (if applicable to project)

- NOTICE TO THE APPLICANT/OWNER/ OWNERS AGENT/ARCHITECT or ENGINEER OF RECORD: By using this permitted construction drawings for construction/installation of the work specified herein, you agree to comply with the requirements of City of San Diego for special inspections, structural observations, construction material testing and off-site fabrication of building components, contained in the statement of special inspections and, as required by the California construction codes.
- NOTICE TO THE CONTRACTOR/BUILDER/INSTALLER/SUB-CONTRACTOR/OWNER-BUILDER: By using this permitted construction drawings for construction/installation of the work specified herein, you acknowledge and are aware of. the requirements contained in the statement of special inspections. You agree to comply with the requirements of City of San Diego for special inspections, structural observations, construction material testing and off-site fabrication of building components, contained in the statement of special inspections and, as required by the California construction codes.
- The special inspector must be registered by the City of San Diego, Development Services, in the category of work required to have special inspection.
- The special inspections identified on plans are, in addition to, and not a substitute for, those inspections required to be performed by a City's building inspector.
- The construction materials testing laboratory must be approved by the City of San Diego, Development Services, for testing of materials, systems, components and, equipment.
- Offsite fabricator must be approved by the City of San Diego, Development Services far the fabrication of members and assemblies on the premises of the fabricator's shop.
- Offsite fabricator shall submit an 'Application to perform Off-Site Fabrication' to the Inspection Services Division for approval prior to commencement of fabrication.
- Offsite fabricator shall submit a 'Certificate of Compliance for Off-Site Fabrication' to the Inspection Services Division prior to erection of fabricated items and assemblies.

Soils and Foundation

- When no geotechnical investigation report is provided:

The structure(s) will be located entirely on undisturbed native soil.

Signature _____, Owner /Licensed Engineer or Architect

- When no geotechnical investigation report is provided:

As a California licensed Architect/Engineer, I have classified the undisturbed native soils to be _____and per Table 1806.2 of the 2019 CBC I have assigned a foundation pressure of _____psf. for the design of foundations related to this project.

Signature of Licensed Architect/engineer

- If the Building Inspector suspects fill, expansive soils or any geologic instability based upon observation of the foundation excavation, a soils or geological report, and resubmittal of plans to plan check to verify that report recommendations have been incorporated, may be required.

Fire Notes

- During construction, at least one extinguisher shall be provided on each floor level at each stairway. in all storage and construction sheds, in locations where flammable or combustible liquids ore stored or used, and where other special hazards are present per CFC 3315.1.
- Buildings undergoing construction, alteration, or demolition shall conform to CFC Chapter JJ. Welding, cutting, and other hot work shall be in conformance with CFC Chapter J5.

California Residential Code

- Ducts in the garage and ducts penetrating walls or ceilings separating the dwelling from the garage shall be constructed of minimum No. 26 gauge sheet steel or other approved material and shall have no openings into the garage. [CRC RJ02.5.2J
- Shower compartments and bathtubs with installed shower heads shall be finished with a nonabsorbent surface that extends to a height of not less than 6 feet above the floor. [CRC RJ07.2J
- Smoke alarms and smoke detectors shall be installed a minimum of 20 feet horizontal distance from a permanently installed cooking appliance.
- Smoke alarms shall be installed not less than a 3-foot horizontal distance from the door or opening of o bathroom thot contains a bathtub or shower unless this would prevent placement of a smoke alarm required by other sections of tho CRC.
- Smoke alarms and smoke detectors shall not be installed within a 36-inch horizontal path from the supply registers of a forced air heating or cooling system and shall be installed outside of the direct airflow of those registers.
- Smoke alarms shall be interconnected so that actuation of one alarm will activate all the alarms within the individual dwelling unit. In new construction smoke alarms shall receive their primary power source from the building wiring and shall be equipped with battery backup and low battery signal.
- Smoke alarms shall comply with NFPA 72 and shall be listed in accordance with UL 217.
- Combination smoke and carbon monoxide alarms shall be listed in accordance with UL 217 and UL 2034.
- Smoke alarm systems and components shall be Califomia State Fire Marshal listed and approved in accordance with California Code of Regulations, Title 19, Division 1 for the purpose far which they are installed.
- Window opening control devices serving emergency escape and rescue openings shall comply with ASTM F2090. [CRC R3I0.1.1).
- Add note on plans: "Window fall control device shall comply with ASTM F2090. At the emergency escape windows, the device after operation should release the control device allowing the windows to fully open providing the clear net opening area required for emergency escape window in accordance with CRC R310.2.1.

2019 Residential - California Green Building Standards Code

Electric Vehicle Charging

- A listed raceway to facilitate future installation of Electric Vehicle Charger.
- Raceway shall be not less than trade size 1 (nominal 1-in. diameter) to accommodate a dedicated 208/240-volt branch circuit.
- Raceway shall originate at the main service or subpanel and terminate into a listed cabinet, box or other enclosure in close proximity to the proposed location of the EV charger.
- Raceway shall be continuous at enclosed, inaccessible or concealed areas and spaces.
- The service panel or subpanel shall provide capacity to install a 40-ompre minimum dedicated branch circuit and space(s) reserved to permit installation of a branch circuit overcurrent protective device.
- The service panel or subpanel circuit directory shall identify:

a) The overcurrent protective device space(s) for future [V charging as "EV CAPABLE"
b) The raceway termination location as "EV CAPABLE"
c)

Genera/ Notes:

- New residential developments with a landscape area over 500 sq. ft. shall comply with one of the following [CALGreen 4.304.1]-

1) Local water efficient landscape ordinance or current California Deportment of Water Resources' Model Water Efficient Landscape Ordinance (MWELO).
2) Landscape areas less than 2500 sq. ft. may comply with MWELO's Appendix D Prescriptive Compliance Option.

- Joints and openings, annular spaces around pipes, electric cables, conduits, or other openings in plates at exterior walls shall be protected against the passage of rodents by closing such openings with cement mortar, concrete masonry or sim11ar method acceptable to the enforcing agency. [CALGreen 4.406.1]
- Before final inspection, a complete operation and maintenance manual shall be placed in the building. A sample of the manual is available on the Housing and Community Development (HCD) website. the manual should include the items listed in 2019 CALGreen 4.410.1.
- Paints, stains, coatings, adhesives, sealants and caulks shall comply with the Volatile Organic Compound (VOC) limits listed in 2019 CALGreen Section 4.504.2.
- The VOC Content Verification shall be made available to the City staff upon request.
- All new and carpet cushions installed in the building interior shall meet the testing and product requirements of one of the following:

1) Carpet and Rug Institutes Green Label Plus Program
2) California Department of Public Health's Specification 01350
J) NSF /ANSI 140 at the Gold level
4) Scientific Certification Systems Indoor AdvantageTM Gold

- Eighty percent of the floor area receiving resilient flooring shall comply with one or more of the following [CALGreen 4.504.4]

1) VOC emission limits defined in tho CHPS High Performance Products Database
2) Certified under UL GREENGUARD Gold
J) Certification under the Resilient Floor Covering Institute (RFCI) FloorScore Program
4) Meet the California Department of Public Health's Specification 01350

- New hardwood plywood, particle board, and medium density fiberboard (MDF) composite wood product used in the building shall meet the formaldehyde limits listed in 2019 CALGreen Table 4,504.5.
- Building materials with visible signs of water damage shall not be installed. Walls and floor framing shall not be enclosed when framing members exceed 19% moisture content. {CALGreen 4.505.3]

Plumbing/Mechanical

- A plumbing fixture certification must be completed and signed by either a licensed general contractor, a plumbing subcontractor, or the building owner certifying the flow rate of the fixtures installed. A copy of the certification can be obtained from the Development Services Department.
- All plumbing fixtures and fittings will be water conserving and will comply with the 2019 CGBSC
- Per 2019 CGBSC, plumbing fixtures (water closets and urinals) and fittings (faucets and showerheads) shall be installed in accordance with the California Plumbing Code (CPC).
- Provide lavatory faucets with a maximum flow of 1.2 gallons per minute (GPM).
- Provide kitchen faucets with a maximum flow of 1.8 gallons per minute (CPI.I).
- Provide water closets with a maximum flow of 1.28 gallons flush (GPF).
- Provide shower heads with a maximum flow of 1.8 gallons per minute (GPM).
- When a shower is served by more than one showerhead, the combined flow rate of all showerheads and/or other shower outlets controlled by a single valve shall not exceed 2.0 gallons per minute at 80 psi, or the shower shall be designed to only allow one shower outlet to be in operation at a time. Handheld showers ore considered showerheads.
- Shower compartments and bathtubs with installed shower heads shall be finished with a non-absorbent surface that extends to a height of not less than 6 ft above the floor.
- Permanent vacuum breakers shall be included with all new hose bibbs.
- Plumbing fixtures (water closets and urinals) and fittings (faucets and showerheads) shall be installed in accordance with the California Plumbing Code (CPC).
- Any installed gas fireplace shall be a direct-vent sealed-combustion type. Any installed woodstove or pellet stove shall comply with U.S. [PA Phase II emission limits where applicable. Woodstoves, pellet stoves and fireplaces shall also comply with applicable local ordinances.
- Mechanical exhaust fans which exhaust directly from bathrooms shall comply with the following:

1. Fans shall be ENERGY STAR compliant and be ducted to terminate outside the building.
2. Unless functioning as a component of a whole house ventilation system, fans must be controlled by a humidistat which shall be readily accessible. Humidistat controls shall be capable of adjustment between a relative humidity range of 50 to 80 percent.

- Heating and Air conditioners shall be sized, designed and have their equipment selected using the following methods:

1. The heat loss and heat gain is established according to ANSI/ACCA 2 Manual J - 2004 (Residential Load Calculation), ASHRA handbooks or other equivalent design software or methods.
2. Duct systems are sized according to ANSI/ACCA 1 Manual D - 2009 (Residential Duct Systems), ASHRA handbooks or other equivalent design software or methods.
3. Select heating and cooling equipment according to ANSI/ACCA 3 Manual S - 2004 (Residential Equipment Selection).

- All duct and other related air distribution component openings shall be covered during with tape, plastic, or sheet metal until the final startup of the heating cooling, and ventilation equipment.

[CALGreen 4.504.1]

- Newly installed bathroom exhaust fans shall be Energy Star compliant and be ducted to terminate outside of the bw1ding. Unless functioning as a component of a whale house ventilation system, fans must be controlled by o humidistat which can adjust between 50 to 80 percent. [CALGreen 4,506.1]

Outdoor Showers

- Outdoor shower drains and sinks are not permitted to connect to the public sewer system unless equipped with an approved cover. Cold water connection only.
- Storm/Rainwater is not permitted in the public sewer conveyance system.

2019 Residential California Energy Code

Lighting

- Lighting in bathrooms shall have all high efficacy luminaires and at least one luminaire must be controlled by a vacancy sensor.
- All the installed wattage of luminaires in kitchens shall be high efficacy and shall have a manual on/off in addition to a vacancy sensor or dimmer. Under cabinet lighting shall be switched separately.
- Lighting in Garages, Laundry Rooms and Utility Rooms: All luminaires shall be high efficacy and at least one luminaire in each of these spaces shall be controlled by a vacancy sensor.
- All luminaires shall be high efficacy and shall have a manual on/off in addition to a vacancy sensor or dimmer.
- Outdoor Lighting: All 1uminaires mounted to the building or to other buildings on the same lot shall be high efficacy luminaires and must be controlled by a manual on and off switch, AND controlled by one of these automatic control twes: Photocontrol and a motion sensor, or

Astronomical time clock or for energy management control system (rMCS).

- Provide an exterior light at new exterior exits. For dwelling units, attached garages, and detached garages with electric power, at least one wall switch-controlled lighting outlet shall be installed to provide illumination on the exterior side of outdoor entrances or exits with grade level access. A vehicle door in a garage shall not be considered as on outdoor entrance or exit. Exception:

Remote, central, or automatic control of lighting shall be permitted.

2019 Residential -Mechanical / Plumbing

Mechanical Notes

- Attic/Underfloor installation must comply with Sections 904, 908, and 909 of the California Mechanical Code (CMG).
- When a water heater compartment is operable to and is accessible from a bedroom or bathroom,

fuel burning water heaters shall be separated in a closet protected with a listed, gasketed self-closing door assembly installed with a threshold/bottom sea/ complying with Section 504.1.1 and 504.1.2 of the California Plumbing Code. Combustion air shall be supplied to the closet from the exterior in accordance with Section 506.4 of the CPC &: the water heater shall be direct venting. the closet shall be used exclusively for the water heater. CPC 504.1

- When a central heating furnace compartment is operable to and is accessible from a sleeping room such as a bedroom or a bathroom they shall be separated from bedroom in a closet protected with a listed, gasketed self-closing door assembly complying with Section 904.1.1 and 904.1.2 of the California Mechanical Code. Combustion air shall be supplied to the closet from the exterior in accordance with Section 506.4 of the CPC. The closet shall be used exclusively for the furnace. The furnace shall be of the direct vent type. CMG 904.1

Water Meter/Residential Fire Sprinkler

- Water meters for combined domestic water and fire sprinkler systems shall not be installed until the fire sprinkler system has been submitted and approved by the Building Official.
- After the building permit has been issued, the owner shall be responsible for on any costs incurred as a result of changes to the design of the fire sprinkler system which produce a higher GPM and a larger meter size requirement:

Owner Signature: _____

2019 Residential - Very High Fire Hazard Zone Severity Zone

- Roof gutters shall be provided with the means to prevent the accumulation of leaves and debris in

the gutter. All roof gutters and downspouts shall be constructed of non-combustible materials. [CRC R337.5.4]

- Drip edge flashing used at the free edges of roofing materials shall be non-combustible.
- Valley flashings shall be not less than 0.019-inch (No. 26 galvanized sheet gage) corrosion-resistant metal installed over a minimum 36-inch-wide underlayment consisting of one

layer of No. 72 ASTM cap sheet running the full length of the valley. [CRC R337.5.3].

- Chimneys, flues or stovepipes attached to any fireplace, stove, barbeque or other solid or liquid fuel burning equipment or device shall be equipped with an approves spark arrestor.
- Turbine attic vents shall be equipped to allow one-way direction rotation only and shall not free spin in both directions.
- Glazing frames mode of vinyl materials shall hove welded comers, metal reinforcement in the

interlock area, and be certified to the most current edition of ANSI/AAMA/NWWDA 101/1.S.2 structural requirements

3/29/2024, 1:38:28 PM
PRJ-1070918
Adrian Feral

PACIFIC COAST
619-453-3142
INFO@PACIFICCOASTDRAFTING.COM

THE BALLOW RESIDENCE

3543 44TH ST
SAN DIEGO, CA 92105

ATTN:
CHRISTIAN BALLOW
619-207-7601
CHRISTIAN@GENEBOWMAN.COM

REVISIONS
3-29-23

PROJECT NO.
PRJ-1070918

PREPARER OF PLAN
ED MAHONY

GN1

STORM WATER QUALITY NOTES - CONSTRUCTION BMPS

THIS PROJECT SHALL COMPLY WITH ALL CURRENT REQUIREMENTS OF THE STATE PERMIT; CALIFORNIA REGIONAL WATER QUALITY CONTROL BOARD (SDRWQCB), SAN DIEGO MUNICIPAL STORM WATER PERMIT, THE CITY OF SAN DIEGO LAND DEVELOPMENT CODE, AND THE STORM WATER STANDARDS MANUAL.

PRIOR TO ANY SOIL DISTURBANCE, TEMPORARY SEDIMENT CONTROLS SHALL BE INSTALLED BY THE CONTRACTOR OR QUALIFIED PERSON(S) AS INDICATED BELOW:

1 ALL REQUIREMENTS OF THE CITY OF SAN DIEGO STORM WATER STANDARDS "MUST INCORPORATE INTO THE DESIGN AND CONSTRUCTION OF THE PROPOSED GRADING IMPROVEMENTS CONSISTENT WITH THE APPROVED STORM WATER POLLUTION PREVENTION PLAN (SWPPP) AND/OR WATER POLLUTION CONTROL PLAN (WPCP) FOR CONSTRUCTION LEVEL BMPS AND, IF APPLICABLE, THE STORM WATER QUALITY MANAGEMENT PLAN (SWQMP) FOR POST-CONSTRUCTION BMPS.

2. THE CONTRACTOR SHALL INSTALL AND MAINTAIN ALL STORM DRAIN INLET PROTECTION, INLET PROTECTION IN THE PUBLIC RIGHT-OF-WAY MUST BE TEMPORARILY REMOVED PRIOR TO A RAIN EVENT TO ENSURE NO FLOODING OCCURS AND REINSTALLED AFTER RAIN IS OVER.

3. ALL CONSTRUCTION BMPS SHALL BE INSTALLED AND PROPERLY MAINTAINED THROUGHOUT THE DURATION OF CONSTRUCTION.

4. THE CONTRACTOR SHALL ONLY GRADE, INCLUDING CLEARING AND GRUBBING AREAS FOR WHICH THE CONTRACTOR OR QUALIFIED CONTACT PERSON CAN PROVIDE EROSION AND SEDIMENT CONTROL MEASURES.

5. THE CONTRACTOR IS RESPONSIBLE FOR ENSURING THAT ALL SUBCONTRACTORS AND SUPPLIERS ARE AWARE OF ALL STORM WATER BMPS AND IMPLEMENT SUCH MEASURES, FAILURE TO COMPLY WITH THE APPROVED SWPPP/WPCP WILL RESULT IN THE ISSUANCE OF CORRECTION NOTICES, CITATIONS, CIVIL PENALTIES, AND/OR STOP WORK NOTICES.

6. THE CONTRACTOR OR QUALIFIED CONTACT PERSON SHALL BE RESPONSIBLE FOR CLEANUP OF ALL SILT, DEBRIS AND MUD ON AFFECTED AND ADJACENT STREETS, AND WITHIN STORM DRAIN SYSTEM DUE TO CONSTRUCTION VEHICLES / EQUIPMENT AND CONSTRUCTION ACTIVITY AT THE END OF EACH WORK DAY.

7. THE CONTRACTOR SHALL PROTECT NEW AND EXISTING STORM WATER CONVEYANCE SYSTEMS FROM SEDIMENTATION, CONCRETE RINSE, OR OTHER CONSTRUCTION-RELATED DEBRIS AND DISCHARGES WITH APPROPRIATE BMPS THAT ARE ACCEPTABLE TO THE CITY RESIDENT ENGINEER AND AS INDICATED IN THE SWPPP/WPCP.

8. THE CONTRACTOR OR QUALIFIED CONTACT PERSON SHALL CLEAR DEBRIS, SILT AND MUD FROM ALL DITCHES AND SWALES PRIOR TO AND WITHIN 3 BUSINESS DAYS AFTER EACH RAIN EVENT OR PRIOR TO THE NEXT RAIN EVENT, WHICHEVER IS SOONER.

9. IF A NON-STORM WATER DISCHARGE LEAVES THE SITE, THE CONTRACTOR SHALL IMMEDIATELY STOP THE ACTIVITY AND REPAIR THE DAMAGES. THE CONTRACTOR SHALL NOTIFY THE CITY RESIDENT ENGINEER OF THE DISCHARGE, PRIOR TO RESUMING CONSTRUCTION ACTIVITY. ANY AND ALL WASTE MATERIAL, SEDIMENT, AND DEBRIS FROM EACH NON-STORM WATER DISCHARGE SHALL BE REMOVED FROM THE STORM DRAIN CONVEYANCE SYSTEM AND PROPERLY DISPOSED OF BY THE CONTRACTOR.

10. EQUIPMENT AND WORKERS FOR EMERGENCY WORK SHALL BE MADE AVAILABLE AT ALL TIMES. ALL NECESSARY MATERIALS SHALL BE STOCKPILED ONSITE AT CONVENIENT LOCATIONS TO FACILITATE RAPID DEPLOYMENT OF CONSTRUCTION BMPS WHEN RAIN IS IMMINENT.

11. THE CONTRACTOR SHALL RESTORE AND MAINTAIN ALL EROSION AND SEDIMENT CONTROL BMPS TO WORKING ORDER YEAR-ROUND.

12. THE CONTRACTOR SHALL IN ADDITIONAL EROSION AND SEDIMENT CONTROL MEASURES DUE TO UNFORSEEN CIRCUMSTANCES TO PREVENT N0N-STORM WATER AND SEDIMENT LADEN DISCHARGES.

13. THE CONTRACTOR SHALL BE RESPONSIBLE AND SHALL TAKE NECESSARY PRECAUTIONS TO PREVENT PUBLIC TRESPASS ONTO AREAS WHERE IMPOUNDED WATERS CREATE A HAZARDOUS CONDITION.

14. ALL EROSION AND SEDIMENT CONTROL MEASURES PROVIDED PER THE APPROVED SWPPP/WPCP SHALL BE INSTALLED AN MAINTAINED. ALL EROSION AND SEDIMENT CONTROLS FOR INTERIM CONDITIONS SHALL BE PROPERLY DOCUMENTED AND INSTALLED TO THE SATISFACTION OF THE CITY RESIDENT ENGINEER.

15. AS NECESSARY, THE CITY RESIDENT ENGINEER SHALL SCHEDULE MEETINGS FOR THE PROJECT TEAM (GENERAL CONTRACTOR, QUALIFIED CONTACT PERSON, EROSION CONTROL SUBCONTRACTOR IF ANY, ENGINEER OF WORK, OWNER/DEVELOPER, AND THE CITY RESIDENT ENGINEER) TO EVALUATE THE ADEQUACY OF THE EROSION AND SEDIMENT CONTROL MEASURES AND OTHER BMPS RELATIVE TO THE ANTICIPATED CONSTRUCTION ACTIVITIES.

16. THE CONTRACTOR OR QUALIFIED CONTACT PERSON SHALL CONDUCT VISUAL INSPECTIONS AND MAINTAIN ALL BMPS DAILY AND AS NEEDED. VISUAL INSPECTIONS AND MAINTENANCE OF ALL BMPS SHALL BE CONDUCTED BEFORE, DURING AND AFTER EVERY RAIN EVENT AND EVERY 24 HOURS DURING ANY PROLONGED RAIN EVENT. THE CONTRACTOR SHALL MAINTAIN AND REPAIR ALL BMPS AS SOON AS POSSIBLE AS SAFETY ALLOWS.

17. CONSTRUCTION ENTRANCE AND EXIT AREA. TEMPORARY CONSTRUCTION ENTRANCE AND EXITS SHALL BE CONSTRUCTED IN ACCORDANCE WITH CASQA FACT SHEET TC-1 0R CALTRANS FACT SHEET TC-01 TO PREVENT TRACKING OF SEDIMENT AND OTHER POTENTIAL POLLUTANTS ONTO PAVED SURFACES AND TRAVELED WAYS WIDTH SHALL BE 10' OR THE MINIMUM NECESSARY TO ACCOMMODATE VEHICLES AND EQUIPMENT WITHOUT BY-PASSING THE ENTRANCE. a) NON-STORM WATER DISCHARGES SHALL BE EFFECTIVELY MANAGED PER THE SAN DIEGO MUNICIPAL CODE CHAPTER 4, ARTICLE 3, DIVISION 3 "STORM WATER MANAGEMENT AND DISCHARGE CONTROL.

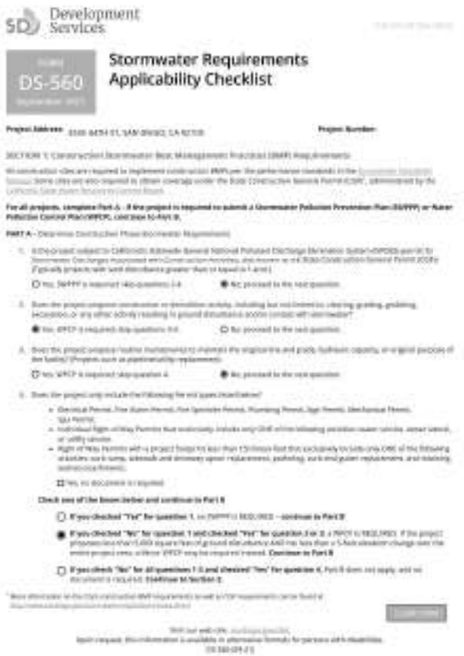
Development Services

DS-560

Stormwater Requirements
Applicability Checklist

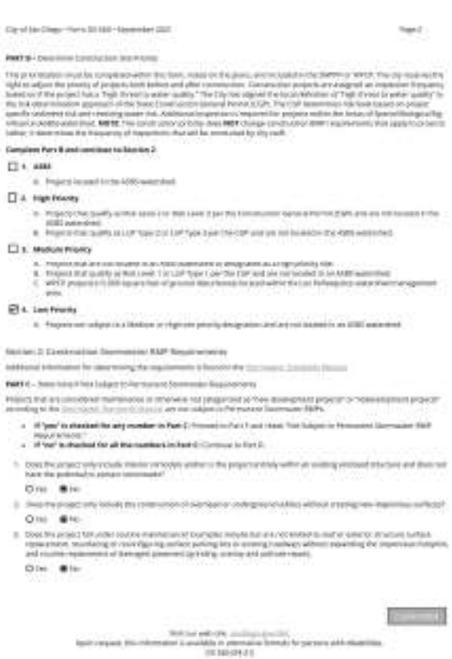



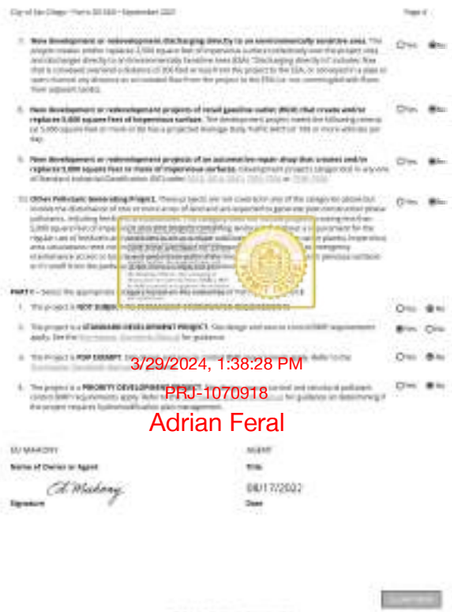

3/29/2024, 1:38:28 PM
PRJ-1070918
Adrian Feral

PACIFIC COAST
619-453-3142
INFO@PACIFICCOASTDRAFTING.COM

THE BALLOW RESIDENCE

3543 44TH ST

SAN DIEGO, CA 92105

ATTN:
CHRISTIAN BALLOW
619-207-7601
CHRISTIAN@GENEBOWMAN.COM

REVISIONS
3-29-23

PROJECT NO.
PRJ-1070918

PREPARER OF PLAN
ED MAHONY

GN2

Instructions:
This checklist is to be used on an individual project basis and may be modified by the applicant to meet the needs of their specific project. The applicant shall strike out those sections that are not applicable to their project and indicate the location of where this information is located. The applicant and property owner assume all responsibility associated with the use of this document.

2019 CALIFORNIA GREEN BUILDING STANDARDS CODE

RESIDENTIAL MANDATORY MEASURES, SHEET 1 (January 2020, Includes August 2019 Supplement)

CHAPTER 3
GREEN BUILDING
SECTION 301 GENERAL

301.1 SCOPE. Buildings shall be designed to include the green building measures specified as mandatory in the application checklists contained in this code. Voluntary green building measures are also included in the application checklists and may be included in the design and construction of structures covered by this code, but are not required unless adopted by a city, county, or city and county as specified in Section 101.7.

301.1.1 Additions and alterations. [HCD] The mandatory provisions of Chapter 4 shall be applied to additions or alterations of existing residential buildings where the addition or alteration increases the building's conditioned area, volume, or size. The requirements shall apply only to and/or within the specific area of the addition or alteration.

Note: On and after January 1, 2014, residential buildings undergoing permitted alterations, additions, or improvements shall replace noncompliant plumbing fixtures with water-conserving plumbing fixtures. Plumbing fixture replacement is required prior to issuance of a certificate of final completion, certificate of occupancy or final permit approval by the local building department. See Civil Code Section 1101.1, et seq., for the definition of a noncompliant plumbing fixture, types of residential buildings affected and other important enactment dates.

301.3 LOW-RISE AND HIGH-RISE RESIDENTIAL BUILDINGS. [HCD] The provisions of individual sections of CALGreen may apply to either low-rise residential buildings, high-rise residential buildings, or both. Individual sections will be designated by Exceptions to indicate which the section applies specifically to low-rise only (LR) or high-rise only (HR). When the section applies to both low-rise and high-rise buildings, no Exception will be used.

SECTION 302 MIXED OCCUPANCY BUILDINGS

302.1 MIXED OCCUPANCY BUILDINGS. In mixed occupancy buildings, each portion of a building shall comply with the specific green building measures applicable to each specific occupancy.

ABBREVIATION DEFINITIONS

HCD	Department of Housing and Community Development
BSC	California Building Standards Commission
DSA-SS	Division of the State Architect - Structural Safety
OSHPD	Office of Statewide Health Planning and Development
LR	Low Rise
HR	High Rise
AA	Additions and Alterations
N	New

CHAPTER 4
RESIDENTIAL MANDATORY MEASURES
DIVISION 4.1 PLANNING AND DESIGN
SECTION 4.102 DEFINITIONS

4.102.1 DEFINITIONS.
The following terms are defined in Chapter 2 (and are repeated here for reference):

FRENCH DRAIN. A trench, hole or other depressed area loosely filled with rock, gravel, fragments of brick or similar pervious material used to collect or channel drainage or runoff water.

WAFFLES. Waffles are used to reduce settlement in runoff. Waffles are often constructed of natural plant materials such as hay, straw or similar material shaped in the form of tubes and placed on a downflow slope. Waffles are also used for perimeter and inlet controls.

4.106 SITE DEVELOPMENT

4.106.1 GENERAL. Preservation and use of available natural resources shall be accomplished through evaluation and careful planning to minimize negative effects on the site and adjacent areas. Preservation of slopes, management of storm water drainage and erosion controls shall comply with this section.

4.106.2 STORM WATER DRAINAGE AND RETENTION DURING CONSTRUCTION. Projects which disturb less than one acre of soil and are not part of a larger common plan of development which in total disturbs one acre or more, shall manage storm water drainage during construction. In order to manage storm water drainage during construction, one or more of the following measures shall be implemented to prevent flooding of adjacent property, prevent erosion and retain soil runoff on the site.

1. Retention basins of sufficient size shall be utilized to retain storm water on the site.
2. Where storm water is conveyed to a public drainage system, infiltration pits, swales or similar disposal method, water shall be filtered by use of a vegetated system, swales or other method approved by the enforcing agency.
3. Compliance with a lawfully enacted storm water management ordinance.

Note: Refer to the State Water Resources Control Board for projects which disturb one acre or more of soil, or are part of a larger common plan of development which in total disturbs one acre or more of soil.

(Website: https://www.waterboards.ca.gov/water_issues/programs/stormwater/construction.html)

4.106.3 GRADING AND PAVING. Construction plans shall indicate how the site grading or drainage system will manage all surface water flows to keep water from entering buildings. Examples of methods to manage surface water include, but are not limited to, the following:

1. Swales
2. Water collection and disposal systems
3. French drains
4. Water retention gardens
5. Other water measures which keep surface water away from buildings and aid in groundwater recharge.

Exception: Additions and alterations not altering the drainage path.

4.106.4 Electric vehicle (EV) charging for new construction. New construction shall comply with Sections 4.106.4.1, 4.106.4.2, or 4.106.4.3 to facilitate future installation and use of EV chargers. Electric vehicle supply equipment (EVSE) shall be installed in accordance with the California Electrical Code, Article 625.

Exceptions:

1. On a case-by-case basis, where the local enforcing agency has determined EV charging and infrastructure are not feasible based upon one or more of the following conditions:
   1.1. Where there is no commercial power supply.
   1.2. Where there is evidence substantiating that meeting the requirements will alter the local utility infrastructure design requirements on the utility side of the meter so as to increase the utility side cost to the homeowner or the developer by more than $400.00 per dwelling unit.
2. Accessory dwelling units (ADU) and Junior Accessory dwelling units (JADU) without additional parking facilities.

4.106.4.1 New one- and two-family dwellings and townhouses with attached private garages. For each dwelling unit, install a listed raceway to accommodate a dedicated 208/240 volt branch circuit. The raceway shall not be less than trade size 1 (nominal 1 inch inside diameter). The raceway shall originate at the main service or a subpanel and shall terminate into a listed cabinet, box or other enclosure in close proximity to the proposed location of an EV charger. Raceways are required to be continuous at enclosed, inaccessible or concealed areas and spaces. The service panel and/or subpanel shall provide capacity to install a 40-ampere minimum dedicated branch circuit and spaces reserved to permit installation of a branch circuit overcurrent protective device.

4.106.4.1.1 Identification. The service panel or subpanel circuit directory shall identify the overcurrent protective device space(s) reserved for future EV charging as "EV CAPABLE". The raceway termination location shall be permanently and visibly marked as "EV CAPABLE".

4.106.4.2 New multifamily dwellings. If residential parking is available, ten (10) percent of the total number of parking spaces on a building site, provided for all types of parking facilities, shall be electric vehicle charging spaces (EV spaces) capable of supporting future EVSE. Calculations for the required number of EV spaces shall be rounded up to the nearest whole number.

Notes:

1. Construction documents are intended to demonstrate the project's capability and capacity for facilitating future EV charging.
2. There is no requirement for EV spaces to be constructed or available until EV chargers are installed for use.

4.106.4.2.1 Electric vehicle charging space (EV space) locations. Construction documents shall indicate the location of proposed EV spaces. Where common use parking is provided at least one EV space shall be located in the common use parking area and shall be available for use by all residents.

4.106.4.2.1.1 Electric Vehicle Charging Stations (EVCS). When EV chargers are installed, EV spaces required by Section 4.106.4.2.1, Item 1, shall comply with at least one of the following options:

1. The EV space shall be located adjacent to an accessible parking space meeting the requirements of the California Building Code, Chapter 11A, to allow use of the EV charger from the accessible parking space.
2. The EV space shall be located on an accessible route, as defined in the California Building Code, Chapter 2, to the building.

Exception: Electric vehicle charging stations designed and constructed in compliance with the California Building Code, Chapter 11B, are not required to comply with Section 4.106.4.2.1.1 and Section 4.106.4.2.2, Item 3.

Note: Electric vehicle charging stations serving public housing are required to comply with the California Building Code, Chapter 11B.

4.106.4.2.2 Electric vehicle charging space (EV space) dimensions. The EV space shall be designed to comply with the following:

1. The minimum length of each EV space shall be 18 feet (5486 mm).
2. The minimum width of each EV space shall be 9 feet (2743 mm).
3. Only in-slab 20 EV spaces, but not less than one EV space, shall have an 8-foot (2438 mm) wide minimum aisle. A 5-foot (1524 mm) wide minimum aisle shall be permitted provided the minimum width of the EV space is 12 feet (3658 mm).
   a. Surface slope for the EV spaces and the aisle shall not exceed 1 unit vertical in 48 units horizontal (2.083 percent slope) in any direction.

4.106.4.2.3 Single EV space required. Install a listed raceway capable of accommodating a 208/240-volt dedicated branch circuit. The raceway shall not be less than trade size 1 (nominal 1 inch inside diameter). The raceway shall originate at the main service or subpanel and shall terminate into a listed cabinet, box or enclosure in close proximity to the proposed location of the EV space. Construction documents shall identify the raceway termination point. The service panel and/or subpanel shall provide capacity to install a 40-ampere minimum dedicated branch circuit and spaces reserved to permit installation of a branch circuit overcurrent protective device.

4.106.4.2.4 Multiple EV spaces required. Construction documents shall indicate the raceway termination point and proposed location of future EV spaces and EV chargers. Construction documents shall also provide information on anticipated future EVSE, raceway method(s), wiring schematics and electrical load calculations to verify that the electrical panel service capacity and electrical system, including any on-site distribution transformer(s), have sufficient capacity to simultaneously charge all EVs at all required EV spaces at the full rated amperage of the EVSE. Plan design shall be based upon a 40-ampere minimum branch circuit. Required raceways and related components that are planned to be installed underground, enclosed, inaccessible or in concealed areas and spaces shall be installed at the time of original construction.

4.106.4.2.5 Identification. The service panel or subpanel circuit directory shall identify the overcurrent protective device space(s) reserved for future EV charging purposes as "EV CAPABLE" in accordance with the California Electrical Code.

4.106.4.3 New hotels and motels. All newly constructed hotels and motels shall provide EV spaces capable of supporting future installation of EVSE. The construction documents shall identify the location of the EV spaces.

Notes:

1. Construction documents are intended to demonstrate the project's capability and capacity for facilitating future EV charging.
2. There is no requirement for EV spaces to be constructed or available until EV chargers are installed for use.

4.106.4.3.1 Number of required EV spaces. The number of required EV spaces shall be based on the total number of parking spaces provided for all types of parking facilities in accordance with Table 4.106.4.3.1. Calculations for the required number of EV spaces shall be rounded up to the nearest whole number.

TABLE 4.106.4.3.1

TOTAL NUMBER OF PARKING SPACES	NUMBER OF REQUIRED EV SPACES
0-9	0
10-25	1
26-50	2
51-75	4
76-100	5
101-150	7
151-200	10
201 and over	6 percent of total

4.106.4.3.2 Electric vehicle charging space (EV space) dimensions. The EV spaces shall be designed to comply with the following:

1. The minimum length of each EV space shall be 18 feet (5486mm).
2. The minimum width of each EV space shall be 9 feet (2743 mm).

4.106.4.3.3 Single EV space required. When a single EV space is required, the EV space shall be designed in accordance with Section 4.106.4.2.3.

4.106.4.3.4 Multiple EV spaces required. When multiple EV spaces are required, the EV spaces shall be designed in accordance with Section 4.106.4.2.4.

4.106.4.3.5 Identification. The service panels or sub-panels shall be identified in accordance with Section 4.106.4.2.5.

4.106.4.3.6 Accessible EV spaces. In addition to the requirements in Section 4.106.4.3, EV spaces for hotels/motels are all EVSE -ready, when installed, shall comply with the accessibility provisions for the EV charging stations in the California Building Code, Chapter 11B.

DIVISION 4.2 ENERGY EFFICIENCY

4.201 GENERAL

4.201.1 SCOPE. For the purposes of mandatory energy efficiency standards in this code, the California Energy Commission will continue to adopt mandatory standards.

DIVISION 4.3 WATER EFFICIENCY AND CONSERVATION

4.303 INDOOR WATER USE

4.303.1 WATER CONSERVING PLUMBING FIXTURES AND FITTINGS. Plumbing fixtures (water closets and urinals) and fittings (faucets and showerheads) shall comply with the sections 4.303.1.1, 4.303.1.2, 4.303.1.3, and 4.303.1.4.

Note: All noncompliant plumbing fixtures in any residential real property shall be replaced with water-conserving plumbing fixtures. Plumbing fixture replacement is required prior to issuance of a certificate of final completion, certificate of occupancy, or final permit approval by the local building department. See Civil Code Section 1101.1, et seq., for the definition of a noncompliant plumbing fixture, types of residential buildings affected and other important enactment dates.

4.303.1.1 Water Closets. The effective flush volume of all water closets shall not exceed 1.28 gallons per flush. Tank-type water closets shall be certified to the performance criteria of the U.S. EPA WaterSense Specification for Tank-type Toilets.

Note: The effective flush volume of dual flush toilets is defined as the composite, average flush volume of two reduced flushes and one full flush.

4.303.1.2 Urinals. The effective flush volume of wall mounted urinals shall not exceed 0.125 gallons per flush. The effective flush volume of all other urinals shall not exceed 0.5 gallons per flush.

4.303.1.3 Showerheads.

4.303.1.3.1 Single showerhead. Showerheads shall have a maximum flow rate of not more than 1.8 gallons per minute at 80 psi. Showerheads shall comply to the performance criteria of the U.S. EPA WaterSense Specification for Showerheads.

4.303.1.3.2 Multiple showerheads serving one shower. When a shower is served by more than one showerhead, the combined flow rate of all the showerheads and/or other shower outlets controlled by a single valve shall not exceed 1.8 gallons per minute at 80 psi, or the shower shall be designed to only allow one shower outlet to be in operation at a time.

Note: A hand-held shower shall be considered a showerhead.

4.303.1.4 Faucets.

4.303.1.4.1 Residential Lavatory Faucets. The maximum flow rate of residential lavatory faucets shall not exceed 1.2 gallons per minute at 60 psi. The minimum flow rate of residential lavatory faucets shall not be less than 0.8 gallons per minute at 20 psi.

4.303.1.4.2 Lavatory Faucets in Common and Public Use Areas. The maximum flow rate of lavatory faucets installed in common and public use areas (outside of dwellings or sleeping units in residential buildings shall not exceed 0.5 gallons per minute at 60 psi.

4.303.1.4.3 Metering Faucets. Metering faucets when installed in residential buildings shall not deliver more than 0.2 gallons per cycle.

4.303.1.4.4 Kitchen Faucets. The maximum flow rate of kitchen faucets shall not exceed 1.8 gallons per minute at 60 psi. Kitchen faucets may temporarily increase the flow above the maximum rate, but will not exceed 2.2 gallons per minute at 60 psi, and must default to a maximum flow rate of 1.8 gallons per minute at 60 psi.

Note: Where complying faucets are unavailable, aerators or other means may be used to achieve reduction.

4.303.2 STANDARDS FOR PLUMBING FIXTURES AND FITTINGS. Plumbing fixtures and fittings shall be installed in accordance with the California Plumbing Code, and shall meet the applicable standards referenced in Table 1701.1 of the California Plumbing Code.

NOTE:
THIS TABLE COMPILED THE DATA IN SECTION 4.303.1, WHICH IS INCLUDED AS A CONVENIENCE FOR THE USER.

TABLE - MAXIMUM FIXTURE WATER USE

FIXTURE TYPE	FLOW RATE
SHOWER HEADS (RESIDENTIAL)	1.5 GMP @ 80 PSI
LAVATORY FAUCETS (RESIDENTIAL)	MAX. 1.2 GPM @ 60 PSI, MIN. 0.8 GPM @ 20 PSI
LAVATORY FAUCETS IN COMMON & PUBLIC USE AREAS	0.5 GPM @ 60 PSI
KITCHEN FAUCETS	1.8 GPM @ 60 PSI
METERING FAUCETS	0.2 GAL/CYCLE
WATER CLOSET	1.28 GAL/FLUSH
URINALS	0.125 GAL/FLUSH

4.304 OUTDOOR WATER USE

4.304.1 OUTDOOR POTABLE WATER USE IN LANDSCAPE AREAS. Residential developments shall comply with a local water efficient landscape ordinance or the current California Department of Water Resources' Model Water Efficient Landscape Ordinance (MWELO), whichever is more stringent.

NOTES:

1. The Model Water Efficient Landscape Ordinance (MWELO) is located in the California Code Regulations, Title 23, Chapter 2.7, Division 2. MWELO and supporting documents, including water budget calculator, are available at: https://www.water.ca.gov/

DIVISION 4.4 MATERIAL CONSERVATION AND RESOURCE EFFICIENCY

4.406 ENHANCED DURABILITY AND REDUCED MAINTENANCE

4.406.1 RODENT PROOFING. Annular spaces around pipes, electric cables, conduits or other openings in exterior/interior plates at exterior walls shall be protected against the passage of rodents by closing such openings with cement mortar, concrete masonry or a similar method acceptable to the enforcing agency.

4.408 CONSTRUCTION WASTE REDUCTION, DISPOSAL AND RECYCLING

4.408.1 CONSTRUCTION WASTE MANAGEMENT. Recycle and/or salvage for reuse a minimum of 65 percent of the nonhazardous construction and demolition waste in accordance with either Section 4.408.2, 4.408.3 or 4.408.4, or meet a more stringent local construction and demolition waste management ordinance.

Exceptions:

1. Excavated soil and land-clearing debris.
2. Alternate waste reduction methods developed by working with local agencies if diversion or recycle facilities capable of compliance with the item do not exist or are not located reasonably close to the jobsite.
3. The enforcing agency may under exceptional circumstances waive the requirements of this section when isolated jobsites are located in areas beyond the haul boundaries of the diversion facility.

4.408.2 CONSTRUCTION WASTE MANAGEMENT PLAN. Submit a construction waste management plan in conformance with Items 1 through 5. The construction waste management plan shall be updated as necessary and shall be available during construction for examination by the enforcing agency.

1. Identify the construction and demolition waste materials to be diverted from disposal by recycling, reuse on the project or salvage for future use or sale.
2. Specify if construction and demolition waste materials will be sorted on-site (source separated) or bulk mixed (single stream).
3. Identify diversion facilities where the construction and demolition waste material collected will be taken.
4. Identify construction methods employed to reduce the amount of construction and demolition waste generated.
5. Specify that the amount of construction and demolition waste materials diverted shall be calculated by weight or volume, but not by both.

4.408.3 WASTE MANAGEMENT COMPANY. Utilize a waste management company, approved by the enforcing agency, which can provide verifiable documentation that the percentage of construction and demolition waste material diverted from the landfill complies with Section 4.408.1.

Note: The owner or contractor may make the determination if the construction and demolition waste materials will be diverted by a waste management company.

4.408.4 WASTE STREAM REDUCTION ALTERNATIVE (LR). Projects that generate a total combined weight of construction and demolition waste disposed of in landfills, which do not exceed 3.4 pounds, or the building area shall meet the minimum 65% construction waste reduction requirement in Section 4.408.1.

4.408.4 WASTE STREAM REDUCTION ALTERNATIVE. Projects that generate a total combined weight of construction and demolition waste disposed of in landfills, which do not exceed 2 pounds per square foot of the building area, shall meet the minimum 65% construction waste reduction requirement in Section 4.408.1.

4.408.5 DOCUMENTATION. Documentation shall be provided to the enforcing agency which demonstrates compliance with Section 4.408.2, Items 1 through 5, Section 4.408.3 or Section 4.408.4.

Notes:

1. Sample forms found in "A Guide to the California Green Building Standards Code (Nonresidential)" located at www.hcd.ca.gov/CALGreen.html may be used to assist in documenting compliance with this section.
2. Mixed construction and demolition debris (C & D) processors can be located at the California Department of Resources Recycling and Research (CalRecycle).

4.410 BUILDING MAINTENANCE AND OPERATION

4.410.1 OPERATION AND MAINTENANCE MANUAL. At the time of final inspection, a manual, compact disc, web-based reference or other media acceptable to the enforcing agency which includes all of the following shall be placed in the building:

1. Directions to the owner or occupant that the manual shall remain with the building throughout the life cycle of the structure.
2. Operation and maintenance instructions for the following:
   a. Equipment and appliances, including water-saving devices and systems, HVAC systems, photovoltaic systems, electric vehicle chargers, water-heating systems and other major appliances and equipment.
   b. Roof and yard drainage, including gutters and downspouts.
   c. Space conditioning systems, including condensers and air filters.
   d. Landscape irrigation systems.
   e. Water reuse systems.
3. Information from local utility, water and waste recovery providers on methods to further reduce resource consumption, including recycle programs and locations.
4. Public transportation and/or carpool options available in the area.
5. Educational material on the positive impacts of an interior relative humidity between 30-60 percent and what methods an occupant may use to maintain the relative humidity level in that range.
6. Information about water-conserving landscape and irrigation design and controllers which conserve water.
7. Instructions for maintaining gutters and downspouts and the importance of directing water at least 5 feet away from the foundation.
8. Information on required routine maintenance measures, including, but not limited to, caulking, painting, grading around the building, etc.
9. Information about state solar energy and incentive programs available.
10. A copy of all special inspections verifications required by the enforcing agency or this code.

4.410.2 RECYCLING BY OCCUPANTS. Where [illegible] adding units are constructed in a building site, provide easily accessible area(s) that serve(s) [illegible] the site and are identified for the depositing, storage and collection of non-hazardous materials for recycling, including (at a minimum) paper, corrugated cardboard, glass, plastics, organic waste, and metals, or meet a lawfully enacted local recycling ordinance, if more restrictive.

Exceptions: [illegible]

Note: Space considerations and material specifications should be based on current or Public Resources Code Section [illegible] 42649.82 (a)(2)(A) et seq. are encouraged to comply with the organic waste portion of this section.

DIVISION 4.5 ENVIRONMENTAL QUALITY

SECTION 4.503 FIREPLACES

4.503.1 Scope
The provisions of this section shall control the quality of air contaminants that are odorous, irritating and/or harmful to the comfort and well-being of a normal person, occupants and neighbors.

SECTION 4.502 DEFINITIONS

5.102.1 DEFINITIONS.
The following terms are defined in Chapter 2 (and are repeated here for reference):

ADHESIVES, SEALANTS AND CAULKS. Products used to bond one surface to another by attachment, to seal joints or to fill voids.

COMPOSITE WOOD PRODUCTS. Composite wood products include hardwood plywood, particleboard and medium density fiberboard. "Composite wood products" does not include hardboard, structural plywood, structural panels, structural composite lumber, oriented strand board, glued laminated timber, prefabricated wood I joists or finger-jointed lumber, all as specified in California Code of Regulations (CCR), title 17, Section 93120.1.

DIRECT-VENT APPLIANCE. A fuel-burning appliance with a sealed combustion system that draws all air for combustion from the outside atmosphere and discharges all flue gases to the outside atmosphere.

3/29/2024, 1:38:28 PM
PRJ-1070918
Adrian Feral

PACIFIC COAST
619-463-3142
INFO@PACIFICCOASTDRAFTING.COM

THE BALLOW RESIDENCE
SAN DIEGO, CA 92105
3543 44TH ST

ATTN:
CHRISTIAN BALLOW
619-207-7601
CHRISTIAN@GENEBOWMAN.COM

REVISIONS
3-29-23

PROJECT NO.
PRJ-1070918

PREPARER OF PLAN
ED MAHONY

GN3

Instructions:
This checklist is to be used on an individual project basis and may be modified by the applicant to meet the needs of their specific project. The applicant shall strike out those sections that are not applicable to their project and indicate the location of where this information is located. The applicant and property owner assume all responsibility associated with the use of this document.

2019 CALIFORNIA GREEN BUILDING STANDARDS CODE

RESIDENTIAL MANDATORY MEASURES, SHEET 2 (January 2020, Includes August 2019 Supplement)

MAXIMUM INCREMENTAL REACTIVITY (MIR). The maximum change in weight of ozone formed by adding a compound to the "Base Reactive Organic Gas (ROG) Mixture" per weight of compound added, expressed in hundredths of a gram (g 03/g ROC).
Note: MIR values for individual compounds and hydrocarbon solvents are specified in CCR, Title 17, Sections 94700 and 94701.

MOISTURE CONTENT. The weight of the water in wood expressed in percentage of the weight of the oven-dry wood.

PRODUCT-WEIGHTED MIR (PWMIR). The sum of all weight-MIR for all ingredients in a product subject to this article. The PWMIR is the total product reactivity expressed to hundredths of a gram of ozone formed per gram of product (excluding container and packaging).
Note: PWMIR is calculated according to equations found in CCR, Title 17, Section 94521 (a).

REACTIVE ORGANIC COMPOUND (ROC). Any compound that has the potential, once emitted, to contribute to ozone formation in the troposphere.

VOC. A volatile organic compound (VOC) broadly defined as a chemical compound based on carbon chains or rings with vapor pressures greater than 0.1 millimeters of mercury at room temperature. These compounds typically contain hydrogen and may contain oxygen, nitrogen and other elements. See CCR Title 17, Section 94508(a).

4.503 FIREPLACES

4.503.1 GENERAL. Any installed gas fireplace shall be a direct vent sealed-combustion type. Any installed woodstove or pellet stove shall comply with U.S. EPA New Source Performance (Standards (NSPS) emission limits as applicable, and shall have a permanent label indicating they are certified to meet the emission limits. Pitch pine stoves, pellet stoves and fireplaces shall also comply with applicable local ordinances.

4.504 POLLUTANT CONTROL

4.504.1 COVERING OF DUCT OPENINGS & PROTECTION OF MECHANICAL EQUIPMENT DURING CONSTRUCTION. At the time of rough installation, during storage on the construction site and until final startup of the heating, cooling and ventilating equipment, all duct and other related air distribution component openings shall be covered with tape, plastic, sheet metal or other methods acceptable to the enforcing agency to reduce the amount of water, dust or debris which may enter the system.

4.504.2 FINISH MATERIAL POLLUTANT CONTROL. Finish materials shall comply with this section.

4.504.2.1 Adhesives, Sealants and Caulks. Adhesives, sealant and caulks used on the project shall meet the requirements of the following standards unless more stringent local or regional air pollution or air quality management district rules apply:

1. Adhesives, adhesive/bonding primers, adhesive primers, sealants, sealant primers and caulks shall comply with limits on VOC content and chemical component emission rules where applicable or SCAQMD Rule 1168 VOC limits, as shown in Table 4.504.1 or 4.504.2, as applicable. Such products also shall comply with the Rule 1168 prohibition on the use of certain toxic compounds (chloroform, ethylene dichloride, methylene chloride, perchloroethylene and trichloroethylene), except for aerosol products, as specified in Subsection 2 below.
2. Aerosol adhesives, and smaller unit sizes of adhesives, and sealant or caulking compounds (by units of product, less packaging, which do not weigh more than 1 pound and do not contain more than 16 fluid ounces) shall comply with statewide VOC standards and other requirements, including prohibitions on use of certain toxic compounds, of California Code of Regulations, Title 17, commencing with section 94507.

4.504.2.2 Paints and Coatings. Architectural paints and coatings shall comply with VOC limits in Table 1 of the ARB Architectural Suggested Control Measure, as shown in Table 4.504.3, unless more stringent local limits apply. The VOC content limit for coatings that do not meet the definitions for the specialty coatings categories listed in Table 4.504.3 shall be determined by classifying the coating as a Flat, Nonflat or Nonflat-High Gloss coating, based on its gloss, as defined in subsections 4.21, 4.36, and 4.37 of the 2007 California Air Resources Board, Suggested Control Measure, and the corresponding Flat, Nonflat or Nonflat-High Gloss VOC limit in Table 4.504.3 shall apply.

4.504.2.3 Aerosol Paints and Coatings. Aerosol paints and coatings shall meet the Product-weighted MIR Limits for ROC in Section 94522(a)(1) and other requirements, including prohibitions on use of certain toxic compounds and ozone depleting substances, in Sections 94522(a)(2) and (b)(1) of California Code of Regulations, Title 17, commencing with Section 94520 and in areas under the jurisdiction of the Bay Area Air Quality Management District additionally comply with the percent VOC by weight of product limits of Regulation 8, Rule 49.

4.504.2.4 Verification. Verification of compliance with this section shall be provided at the request of the enforcing agency. Documentation may include, but is not limited to, the following:

1. Manufacturer's product specification.
2. Field verification of on-site product containers.

TABLE 4.504.1 - ADHESIVE VOC LIMIT
(Less Water and Less Exempt Compounds in Grams per Liter)

ARCHITECTURAL APPLICATIONS	VOC LIMIT
INDOOR CARPET ADHESIVES	50
CARPET PAD ADHESIVES	50
OUTDOOR CARPET ADHESIVES	150
WOOD FLOORING ADHESIVES	100
RUBBER FLOOR ADHESIVES	60
SUBFLOOR ADHESIVES	50
CERAMIC TILE ADHESIVES	65
VCT & ASPHALT TILE ADHESIVES	50
DRYWALL & PANEL ADHESIVES	50
COVE BASE ADHESIVES	50
MULTIPURPOSE CONSTRUCTION ADHESIVE	70
STRUCTURAL GLAZING ADHESIVES	100
SINGLE-PLY ROOF MEMBRANE ADHESIVES	250
OTHER ADHESIVES NOT LISTED	50
SPECIALTY APPLICATIONS	
PVC WELDING	510
CPVC WELDING	490
ABS WELDING	325
PLASTIC CEMENT WELDING	250
ADHESIVE PRIMER FOR PLASTIC	650
CONTACT ADHESIVE	80
SPECIAL PURPOSE CONTACT ADHESIVE	250
STRUCTURAL WOOD MEMBER ADHESIVE	140
TOP & TRIM ADHESIVE	250
SUBSTRATE SPECIFIC APPLICATIONS	
METAL TO METAL	30
PLASTIC FOAMS	50
POROUS MATERIAL (EXCEPT WOOD)	50
WOOD	30
FIBERGLASS	80

1. IF MULTIMEMBER IS USED TO BOND DISSIMILAR SUBSTRATES TOGETHER, THE ADHESIVE WITH THE HIGHEST VOC CONTENT SHALL BE ALLOWED.
2. FOR ADDITIONAL INFORMATION REGARDING METHODS TO MEASURE THE VOC CONTENT SPECIFIED IN THIS TABLE, SEE SOUTH COAST AIR QUALITY MANAGEMENT DISTRICT RULE 1168.

TABLE 4.504.2 - SEALANT VOC LIMIT
(Less Water and Less Exempt Compounds in Grams per Liter)

SEALANTS	VOC LIMIT
ARCHITECTURAL	250
MARINE DECK	760
NONMEMBRANE ROOF	300
ROADWAY	250
SINGLE-PLY ROOF MEMBRANE	450
OTHER	420
SEALANT PRIMERS	
ARCHITECTURAL	
NON-POROUS	250
POROUS	775
MODIFIED BITUMINOUS	500
MASONRY SEALER	100
OTHER	750

TABLE 4.504.3 - VOC CONTENT LIMITS FOR ARCHITECTURAL COATINGS[1]
GRAMS OF VOC PER LITER OF COATING, LESS WATER & LESS EXEMPT COMPOUNDS

COATING CATEGORY	VOC LIMIT
FLAT COATINGS	50
NON-FLAT COATINGS	100
NONFLAT-HIGH GLOSS COATINGS	150
SPECIALTY COATINGS	
ALUMINUM ROOF COATINGS	400
BASEMENT SPECIALTY COATINGS	400
BITUMINOUS ROOF COATINGS	50
BITUMINOUS ROOF PRIMERS	350
BOND BREAKERS	350
CONCRETE CURING COMPOUNDS	350
CONCRETE/MASONRY SEALERS	100
DRIVEWAY SEALERS	50
DRY FOG COATINGS	150
FAUX FINISHING COATINGS	350
FIRE RESISTIVE COATINGS	350
FLOOR COATINGS	100
FORM-RELEASE COMPOUNDS	250
GRAPHIC ARTS COATINGS (SIGN PAINTS)	500
HIGH TEMPERATURE COATINGS	420
INDUSTRIAL MAINTENANCE COATINGS	250
LOW SOLIDS COATINGS[2]	120
MAGNESITE CEMENT COATINGS	450
MASTIC TEXTURE COATINGS	100
METALLIC PIGMENTED COATINGS	500
MULTICOLOR COATINGS	250
PRETREATMENT WASH PRIMERS	420
PRIMERS, SEALERS, & UNDERCOATERS	100
REACTIVE PENETRATING SEALERS	350
RECYCLED COATINGS	250
ROOF COATINGS	50
RUST PREVENTATIVE COATINGS	250
SHELLACS	
CLEAR	730
OPAQUE	550
SPECIALTY PRIMERS, SEALERS & UNDERCOATERS	100
STAINS	250
STONE CONSOLIDANTS	450
SWIMMING POOL COATINGS	340
TRAFFIC MARKING COATINGS	100
TUB & TILE REFINISH COATINGS	420
WATERPROOFING MEMBRANES	250
WOOD COATINGS	275
WOOD PRESERVATIVES	350
ZINC-RICH PRIMERS	340

1. GRAMS OF VOC PER LITER OF COATING, INCLUDING WATER & EXEMPT COMPOUNDS.
2. THE SPECIFIED LIMITS REMAIN IN EFFECT UNLESS REVISED LIMITS ARE LISTED IN SUBSEQUENT COLUMNS IN THE TABLE.
3. VALUES IN THIS TABLE ARE DERIVED FROM THOSE SPECIFIED BY THE CALIFORNIA AIR RESOURCES BOARD, ARCHITECTURAL COATINGS SUGGESTED CONTROL MEASURE, FEB. 1, 2008. MORE INFORMATION IS AVAILABLE FROM THE AIR RESOURCES BOARD.

TABLE 4.504.5 - FORMALDEHYDE LIMITS
MAXIMUM FORMALDEHYDE EMISSIONS IN PARTS PER MILLION

PRODUCT	CURRENT LIMIT
HARDWOOD PLYWOOD VENEER CORE	0.05
HARDWOOD PLYWOOD COMPOSITE CORE	0.05
PARTICLE BOARD	0.09
MEDIUM DENSITY FIBERBOARD	0.11
THIN MEDIUM DENSITY FIBERBOARD[1]	0.13

1. VALUES IN THIS TABLE ARE DERIVED FROM THOSE SPECIFIED BY THE CALIF. AIR RESOURCES BOARD, AIR TOXICS CONTROL MEASURE FOR COMPOSITE WOOD AS ' 93120 ET SEQ. IN ACCORDANCE WITH ASTM E 1333. FOR ADDITIONAL INFORMATION, SEE CALIF. CODE OF REGULATIONS, TITLE 17, SECTIONS 93120 THROUGH 93120.12.
2. THIN MEDIUM DENSITY FIBERBOARD HAS A MAXIMUM THICKNESS OF 5/16" (8 MM).

DIVISION 4.5 ENVIRONMENTAL QUALITY (continued)

4.504.3 CARPET SYSTEMS. All carpet installed in the building interior shall meet the testing and product requirements of at least one of the following:

1. Carpet and Rug Institute's Green Label Plus Program.
2. California Department of Public Health, "Standard Method for the Testing and Evaluation of Volatile Organic Chemical Emissions from Indoor Sources Using Environmental Chambers," Version 1.1, February 2010 (also known as Specification 01350).
3. NSF/ANSI 140 at the Gold level.
4. Scientific Certifications Systems Indoor Advantage+ Gold.

4.504.3.1 Carpet cushion. All carpet cushion installed in the building interior shall meet the requirements of the Carpet and Rug Institute's Green Label program.

4.504.3.2 Carpet adhesive. All carpet adhesive shall meet the requirements of Table 4.504.1.

4.504.4 RESILIENT FLOORING SYSTEMS. Where resilient flooring is installed, at least 80% of floor area receiving resilient flooring shall comply with one or more of the following:

1. Products compliant with the California Department of Public Health, "Standard Method for the Testing and Evaluation of Volatile Organic Chemical Emissions from Indoor Sources Using Environmental Chambers," Version 1.1, February 2010 (also known as Specification 01350), certified as an CHPS Low-Emitting Material in the Collaborative for High Performance Schools' (CHPS) High Performance Products Database.
2. Products certified under UL GREENGUARD Gold (formerly the Greenguard Children & Schools program).
3. Certification under the Resilient Floor Covering Institute (RFCI) FloorScore program.
4. Meet the California Department of Public Health, "Standard Method for the Testing and Evaluation of Volatile Organic Chemical Emissions from Indoor Sources Using Environmental Chambers", Version 1.1, February 2010 (also known as Specification 01350).

4.504.5 COMPOSITE WOOD PRODUCTS. Hardwood plywood, particleboard and medium density fiberboard composite wood products used on the interior or exterior of the buildings shall meet the requirements for formaldehyde as specified in ARB's Air Toxics Control Measure for Composite Wood (17 CCR 93120 et seq.), by or before the dates specified in those sections, as shown in Table 4.504.5.

4.504.5.1 Documentation. Verification of compliance with this section shall be provided as requested by the enforcing agency. Documentation shall include at least one of the following:

1. Product certifications and specifications.
2. Chain of custody certifications.
3. Product labeled and invoiced as meeting the Composite Wood Products regulation (see CCR, Title 17, Section 93120, et seq.).
4. Exterior grade products marked as meeting the PS-1 or PS-2 standards of the Engineered Wood Association, the Australian AS/NZS 2269, European EN 636 standards, and Canadian CSA 0121, CSA 0151, CSA 2183 and CSA 0325 standards.
5. Other methods acceptable to the enforcing agency.

4.505 INTERIOR MOISTURE CONTROL

4.505.1 General. Buildings shall meet or exceed the provisions of the California Building Standards Code.

4.505.2 CONCRETE SLAB FOUNDATIONS. Concrete slab foundations required to have a vapor retarder by California Building Code, Chapter 19, or concrete slab-on-ground floors required to have a vapor retarder by the California Residential Code, Chapter 5, shall also comply with this section.

4.505.2.1 Capillary break. A capillary break shall be installed in compliance with at least one of the following:

1. A 4-inch (101.6 mm) thick base of 1/2 inch (12.7mm) or larger clean aggregate shall be provided with a vapor barrier in direct contact with concrete and a concrete mix design, which will address bleeding, shrinkage, and curing, shall be used. For additional information, see American Concrete Institute, ACI 302.2R-06.
2. Other equivalent methods approved by the enforcing agency.
3. A slab design specified by a licensed design professional.

4.505.3 MOISTURE CONTENT OF BUILDING MATERIALS. Building materials with visible signs of water damage shall not be installed. Wall and floor framing shall not be enclosed when the framing members exceed 19 percent moisture content. Moisture content shall be verified in compliance with the following:

1. Moisture content shall be determined with either a probe-type or contactless impedance meter. Equivalent moisture verification methods may be approved by the enforcing agency and shall satisfy requirements found in Section 101.8 of this code.
2. Moisture readings shall be taken at a point 2 feet (610 mm) to 4 feet (1219 mm) from the grade stamped end of each piece verified.
3. At least three random moisture readings shall be performed on wall and floor framing with documentation acceptable to the enforcing agency provided at the time of approval to enclose the wall and floor framing.

Insulation products which are visibly wet or have a high moisture content shall be replaced or allowed to dry prior to enclosure in wall or floor cavities. Wet-applied insulation products shall follow the manufacturer's drying recommendations prior to enclosure.

4.506 INDOOR AIR QUALITY AND EXHAUST

4.506.1 Bathroom exhaust fans. Each bathroom shall be mechanically ventilated and shall comply with the following:

1. Fans shall be ENERGY STAR compliant and be ducted to terminate outside the building.
2. Unless functioning as a component of a whole house ventilation system, fans must be controlled by a humidity control.
   a. Humidity controls shall be capable of adjustment between a relative humidity range less than or equal to 50% to a maximum of 80%. A humidity control may utilize manual or automatic means of adjustment.
   b. A humidity control may be a separate component to the exhaust fan and is not required to be integral (i.e., built-in).

Notes:

1. For the purposes of this section, a bathroom is a room which contains a bathtub, shower or bathtub/shower combination.
2. Lighting integral to bathroom exhaust fans shall comply with the California Energy Code.

4.507 ENVIRONMENTAL COMFORT

4.507.2 HEATING AND AIR-CONDITIONING SYSTEM DESIGN. Heating and air conditioning systems shall be sized, designed and have their equipment selected using the following method:

1. The heat loss and heat gain is established according to ANSI/ACCA 2 Manual J – 2011 (Residential Load Calculation), ASHRAE handbooks or other equivalent design software or methods.
2. Duct systems are sized according to ANSI/ACCA 1 Manual D – 2014 (Residential Duct Systems), ASHRAE handbooks or other equivalent design software or methods.
3. Select heating and cooling equipment according to ANSI/ACCA 3 Manual S – 2014 (Residential Equipment Selection), or other equivalent design software or methods.

Exception: Use of alternate design temperatures necessary to ensure the system functions are acceptable.

CHAPTER 7
INSTALLER & SPECIAL INSPECTOR QUALIFICATIONS

702 QUALIFICATIONS

702.1 INSTALLER TRAINING. HVAC system installers shall be trained and certified in the proper installation of HVAC systems including ducts and equipment by a nationally or regionally recognized training or certification program. Uncertified persons may perform HVAC installations only when they work for an employer who is certified by the state to install HVAC systems or when they are directly supervised by and responsible to a person employed and certified to install HVAC systems or contractor licensed to install HVAC systems. Examples of acceptable HVAC training and certification programs include, but are not limited to, the following:

1. State certified apprenticeship programs.
2. Public utility training programs.
3. Training programs sponsored by trade, labor or stakeholder energy consulting or certification organizations.
4. Programs sponsored by manufacturing organizations.
5. Other programs acceptable to the enforcing agency.

702.2 SPECIAL INSPECTION (HERS). When required by the enforcing agency, the owner or the responsible entity acting as the owner's agent shall employ one or more special inspectors to provide inspection or other duties necessary to substantiate compliance with this code. Special inspections shall demonstrate competence to the satisfaction of the enforcing agency for the particular type of inspection or task to be performed. In addition to other certifications or qualifications acceptable to the enforcing agency, the following certifications or education may be considered by the enforcing agency when evaluating the qualifications of a special inspector:

1. Certification by a national or regional green building program or standard publisher.
2. Certification by a statewide energy consulting or certification organization, such as HERS raters, building performance contractors, and home energy auditors.
3. Successful completion of a third party apprentice training program in the appropriate trade.
4. Other programs acceptable to the enforcing agency.

Notes:

1. Special inspectors shall be independent entities with no financial interest in the materials or the project they are inspecting for compliance with this code.
2. HERS raters are special inspectors certified by the California Energy Commission (CEC) to rate homes in California according to the Home Energy Rating System (HERS).

[BSC] When required by the enforcing agency, the owner or the responsible entity acting as the owner's agent shall employ one or more special inspectors to provide inspection or other duties necessary to substantiate compliance with this code. Special inspections shall demonstrate competence to the satisfaction of the enforcing agency for the particular type of inspection or task to be performed. In addition, the special inspector shall have a certification from a recognized state, national or international association, as determined by the local agency. The area of certification shall be closely related to the primary job function, as determined by the local agency.

Note: Special inspectors shall be independent entities with no financial interest in the materials or the project they are inspecting for compliance with this code.

703 VERIFICATIONS

703.1 DOCUMENTATION. Documentation used to show compliance with this code shall include but is not limited to, construction documents, plans, specifications, builder or installer certification, inspection reports, or other methods acceptable to the enforcing agency which demonstrate substantial conformance. When specific documentation or special inspection is necessary to verify compliance, that method of compliance will be specified in the appropriate section or identified applicable checklist.

3/29/2024, 1:38:28 PM
PRJ-1070918
Adrian Feral

PACIFIC COAST
619-453-3142
INFO@PACIFICCOASTDRAFTING.COM

THE BALLOW RESIDENCE
3543 44TH ST SAN DIEGO, CA 92105

ATTN:
CHRISTIAN BALLOW
619-207-7601
CHRISTIAN@GENEBOWMAN.COM

REVISIONS
3-29-23

PROJECT NO.
PRJ-1070918

PREPARER OF PLAN
ED MAHONY

GN4

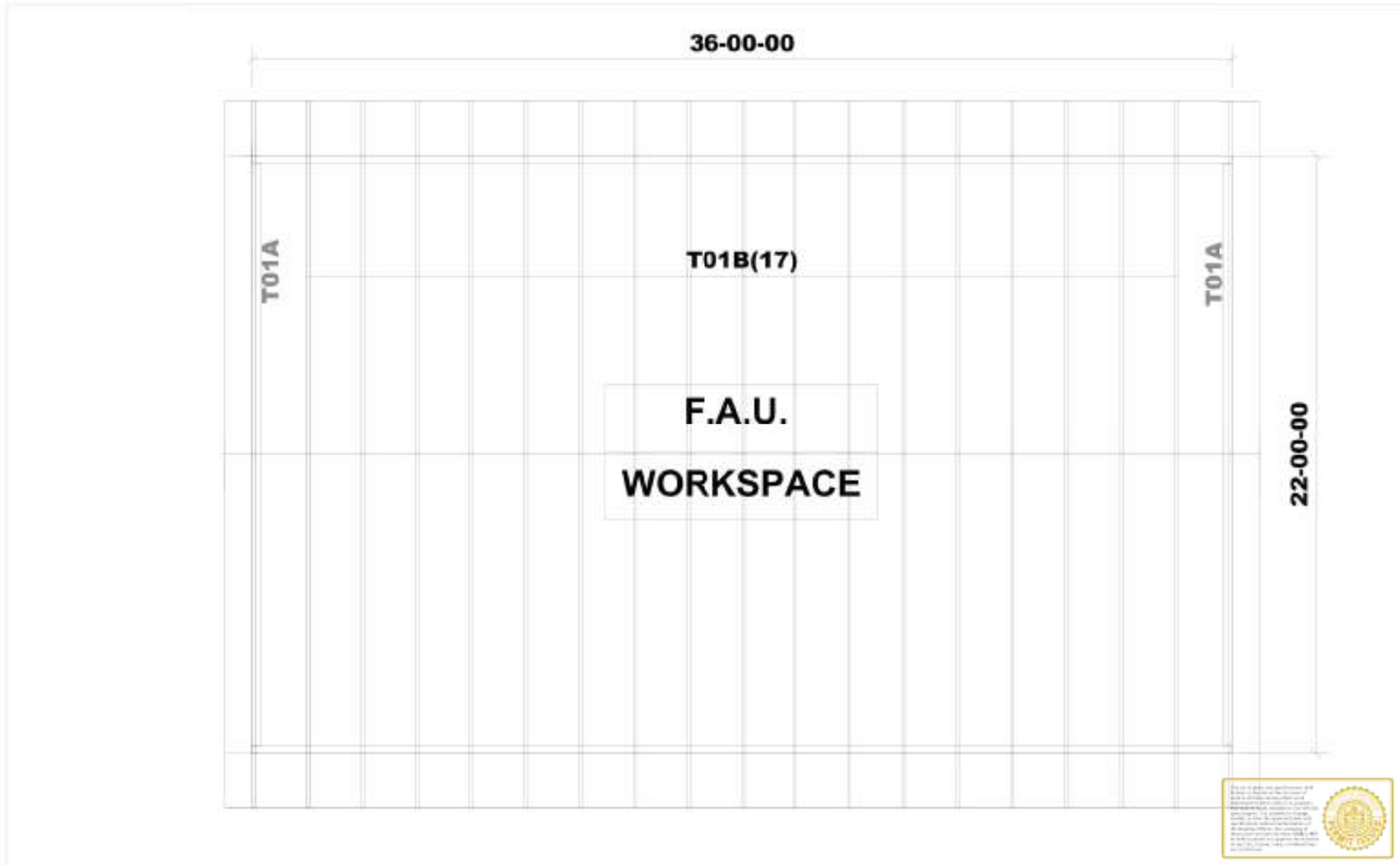

NOTE: ABOVE PLACEMENT PLAN PROVIDED FOR TRUSS PLACEMENT ONLY. REFER TO TRUSS CALCULATIONS AND ENGINEERED STRUCTURAL DRAWINGS FOR ALL FURTHER INFORMATION. BUILDING DESIGNER/ENGINEER OF RECORD IS RESPONSIBLE FOR ALL NON TRUSS TO TRUSS CONNECTIONS. BUILDING DESIGNER/ENGINEER OF RECORD TO REVIEW AND APPROVE OF ALL DESIGNS PRIOR TO CONSTRUCTION.

ALL DESIGNS ARE PROPERTY OF MISSION TRUSS. ALL DESIGNS ARE NULL AND VOID IF NOT FABRICATED BY MISSION TRUSS.

ROOF PITCH: 4:12 U.N.O.	HEEL HEIGHT: 3-15/16" U.N.O.	ISSUE DATE: 5-31-15	Ballow 3545 ft²		
CEILING PITCH: - U.N.O.	TAIL LENGTH: 24" U.N.O.	REVISION 1:	PROBUILD		
	TAIL SIZE: 2x4 U.N.O.	REVISION 2:	ADDITON		
			Newport Beach , CA		
	TRUSS SPACING: 24" U.N.O.	REVISION 3:	DESIGNER RLP	13927-22 ft²	

3/29/2024, 1:38:28 PM

PRJ-1070918

Adrian Feral

MISSION TRUSS

12538 VIGILANTE RD.
LAKESIDE, CA 92040
Ph. 619-873-0440 Fax 866-612-8884
MISSIONTRUSS.COM

PACIFIC COAST

619-453-3142
INFO@PACIFICCOASTDRAFTING.COM

THE BALLOW RESIDENCE

3543 44TH ST

SAN DIEGO, CA 92105

ATTN:
CHRISTIAN BALLOW
619-207-7601
CHRISTIAN@GENEBOWMAN.COM

REVISIONS
3-29-23

PROJECT NO.
PRJ-1070918

PREPARER OF PLAN
ED MAHONY

B1

Job	Truss	Truss Type	Qty	Ply	13927-22-BALLOW 3545-GD	
13927-22	T01A	GABLE	2	1	Job Reference (optional)	R72473611

Mission Truss, Lakeside, CA - 92040, 8.530 s Aug 11 2022 MiTek Industries, Inc. Tue Sep 6 13:19:28 2022 Page 1
ID:D21?KULDHLeiQnoRDd0_sysq3s-jXGKbP62gNZo4p?uaZvqCpPWf?6MNBSVLbvWRygLl0

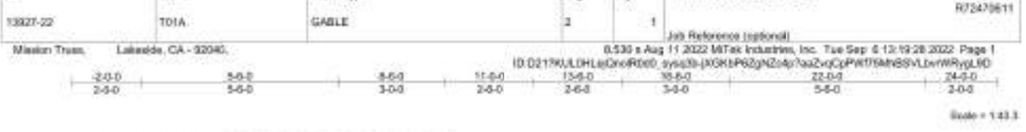

MT 1.5x3 ON EACH FACE OF BOTH ENDS OF UN-PLATED MEMBERS OR EQUIVALENT CONNECTION BY OTHERS.

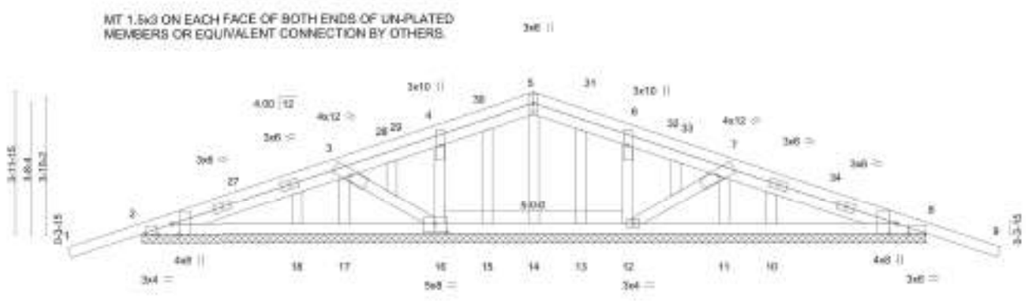

	8-6-0	13-6-0	22-0-0
	8-6-0	5-0-0	8-6-0

Plate Offsets (X,Y)-- [2:0-3-8,Edge], [2:0-4-12,Edge], [8:0-3-12,Edge], [8:0-3-8,Edge], [10:0-4-0,0-3-0]

LOADING (psf)	SPACING- 2-0-0	CSI.	DEFL. in (loc) l/defl L/d	PLATES GRIP
TCLL 20.0	Plate Grip DOL 1.25	TC 0.22	Vert(LL) 0.00 8 n/r 120	MT20 220/195
TCDL 21.0	Lumber DOL 1.25	BC 0.14	Vert(CT) -0.02 9 n/r 120	
BCLL 0.0 *	Rep Stress Incr YES	WB 0.11	Horz(CT) 0.01 8 n/a n/a	
BCDL 10.0	Code IBC2018/TPI2014	Matrix-S		Weight: 130 lb FT = 20%

LUMBER-
TOP CHORD 2X4 DF No.18Btr G
BOT CHORD 2X4 DF No.18Btr G
WEBS 2X4 DF Stud/Std G
OTHERS 2X4 DF Stud/Std G

BRACING-
TOP CHORD Structural wood sheathing directly applied or 6-0-0 oc purlins.
BOT CHORD Rigid ceiling directly applied or 6-0-0 oc bracing.

REACTIONS. All bearings 22-0-0.
(lb) - Max Horz 2=36(LC 11)
Max Uplift All uplift 100 lb or less at joint(s) except 2=-127(LC 25), 8=-127(LC 26)
Max Grav All reactions 250 lb or less at joint(s) 14, 15, 17, 18, 13, 11, 10 except 2=604(LC 24), 16=610(LC 1), 12=610(LC 1), 8=604(LC 23)

FORCES. (lb) - Max. Comp./Max. Ten. - All forces 250 (lb) or less except when shown.
TOP CHORD 2-3=-1225/871, 3-4=-527/497, 4-5=-299/222, 5-6=-299/222, 6-7=-527/497, 7-8=-1225/871
BOT CHORD 2-18=-849/1093, 17-18=-455/738, 16-17=-334/617, 11-12=-334/617, 10-11=-455/738, 8-10=-849/1093
WEBS 7-12=-477/92, 3-16=-477/92, 4-16=-421/79, 6-12=-421/79

NOTES-
1) Unbalanced roof live loads have been considered for this design.
2) Wind: ASCE 7-16; Vult=110mph (3-second gust) Vasd=87mph; TCDL=8.4psf; BCDL=6.0psf; h=25ft; B=45ft; L=37ft; eave=2ft; Cat. II; Exp B; Enclosed; MWFRS (directional) and C-C Corner(3E) -2-0-8 to 1-7-4, Exterior(2N) 1-7-4 to 11-0-0, Corner(3R) 11-0-0 to 14-7-13, Exterior(2N) 14-7-13 to 24-0-8 zone; cantilever left and right exposed ; end vertical left and right exposed;C-C for members and forces & MWFRS for reactions shown; Lumber DOL=1.25 plate grip DOL=1.25
3) Truss designed for wind loads in the plane of the truss only. For studs exposed to wind (normal to the face), see Standard Industry Gable End Details as applicable, or consult qualified building designer as per ANSI/TPI 1.
4) Gable requires continuous bottom chord bearing.
5) Gable studs spaced at 1-4-0 oc.
6) This truss has been designed for a 10.0 psf bottom chord live load nonconcurrent with any other live loads.
7) * This truss has been designed for a live load of 20.0psf on the bottom chord in all areas where a rectangle 3-6-0 tall by 2-0-0 wide will fit between the bottom chord and any other members.
8) A plate rating reduction of 20% has been applied for the green lumber members.
9) Provide mechanical connection (by others) of truss to bearing plate capable of withstanding 127 lb uplift at joint 2 and 127 lb uplift at joint 8.
10) This truss is designed in accordance with the 2018 International Building Code section 2308.11 and referenced standard ANSI/TPI 1.
11) This truss has been designed for a moving concentrated load of 250.0lb live located at all mid panels and at all panel points along the Top Chord, nonconcurrent with any other live loads.
12) This truss has been designed for a total seismic drag load of 2000 lb. Lumber DOL=(1.33) Plate grip DOL=(1.33) Connect truss to resist drag loads along bottom chord from 0-0-0 to 22-0-0 for 90.0 plf.



September 7,2022

WARNING - Verify design parameters and READ NOTES ON THIS AND INCLUDED MITEK REFERENCE PAGE MII-7473 rev. 5/19/2020 BEFORE USE.
Design valid for use only with MiTek® connectors. This design is based only upon parameters shown, and is for an individual building component, not a truss system. Before use, the building designer must verify the applicability of design parameters and properly incorporate this design into the overall building design. Bracing indicated is to prevent buckling of individual truss web and/or chord members only. Additional temporary and permanent bracing is always required for stability and to prevent collapse with possible personal injury and property damage. For general guidance regarding the fabrication, storage, delivery, erection and bracing of trusses and truss systems, see ANSI/TPH Quality Criteria, DSB-89 and BCSI Building Component Safety Information available from Truss Plate Institute, 2670 Case Highway, Suite 203 Waldorf, MD 20601



Job	Truss	Truss Type	Qty	Ply	13927-22-BALLOW 3545-GD	
13927-22	T01B	Common	17	1	Job Reference (optional)	R72473612

Mission Truss, Lakeside, CA - 92040, 8.530 s Aug 11 2022 MiTek Industries, Inc. Tue Sep 6 13:19:29 2022 Page 1
ID:D21?KULDHLeiQnoRDd0_sysq3s-8ygxt?5RrkxThyxn8HQ3k0yc8XLHQv9ie2FoO2ygL9C

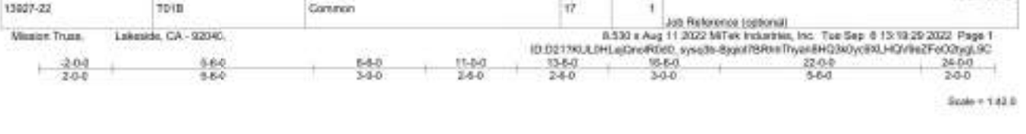

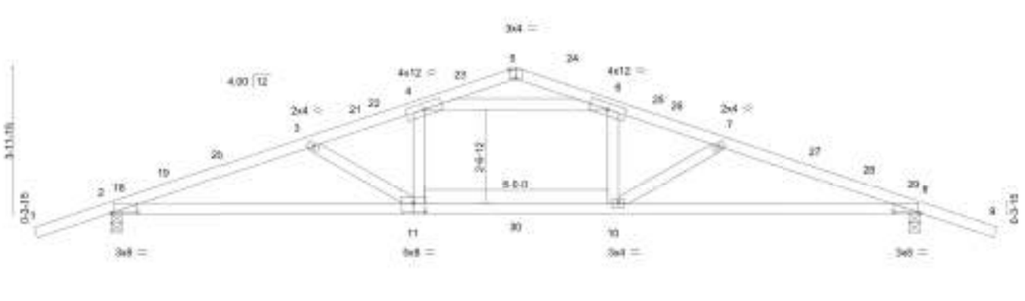

	8-6-0	13-6-0	22-0-0
	8-6-0	5-0-0	8-6-0

Plate Offsets (X,Y)-- [2:0-5-10,0-0-4], [5:0-2-0,Edge], [8:0-5-10,0-0-4], [11:0-4-0,0-3-0]

LOADING (psf)	SPACING- 2-0-0	CSI.	DEFL. in (loc) l/defl L/d	PLATES GRIP
TCLL 20.0	Plate Grip DOL 1.25	TC 0.56	Vert(LL) -0.15 10-17 >999 240	MT20 220/195
TCDL 21.0	Lumber DOL 1.25	BC 0.55	Vert(CT) -0.46 10-17 >575 180	
BCLL 0.0 *	Rep Stress Incr NO	WB 0.66	Horz(CT) 0.10 8 n/a n/a	
BCDL 10.0	Code IBC2018/TPI2014	Matrix-MS		Weight: 90 lb FT = 20%

LUMBER-
TOP CHORD 2X4 DF No.18Btr G
BOT CHORD 2X4 DF No.18Btr G
WEBS 2X4 DF Stud/Std G

BRACING-
TOP CHORD Structural wood sheathing directly applied or 3-9-10 oc purlins.
BOT CHORD Rigid ceiling directly applied or 10-0-0 oc bracing.

REACTIONS. (size) 2=0-3-8, 8=0-3-8
Max Horz 2=37(LC 11)
Max Grav 2=1330(LC 1), 8=1330(LC 1)

FORCES. (lb) - Max. Comp./Max. Ten. - All forces 250 (lb) or less except when shown.
TOP CHORD 2-3=-2735/0, 3-4=-2347/0, 4-5=-623/48, 5-6=-623/48, 6-7=-2326/0, 7-8=-2732/0
BOT CHORD 2-11=0/2555, 10-11=0/2156, 8-10=0/2553
WEBS 7-10=-626/40, 3-11=-607/43, 4-11=0/458, 6-10=0/464, 4-6=-1760/0

NOTES-
1) Unbalanced roof live loads have been considered for this design.
2) Wind: ASCE 7-16; Vult=110mph (3-second gust) Vasd=87mph; TCDL=8.4psf; BCDL=6.0psf; h=25ft; B=45ft; L=37ft; eave=5ft; Cat. II; Exp B; Enclosed; MWFRS (directional) and C-C Exterior(2E) -2-0-8 to 1-7-4, Interior(1) 1-7-4 to 11-0-0, Exterior(2R) 11-0-0 to 14-7-13, Interior(1) 14-7-13 to 24-0-8 zone; cantilever left and right exposed ; end vertical left and right exposed;C-C for members and forces & MWFRS for reactions shown; Lumber DOL=1.25 plate grip DOL=1.25
3) This truss has been designed for a 10.0 psf bottom chord live load nonconcurrent with any other live loads.
4) * This truss has been designed for a live load of 20.0psf on the bottom chord in all areas where a rectangle 3-6-0 tall by 2-0-0 wide will fit between the bottom chord and any other members.
5) A plate rating reduction of 20% has been applied for the green lumber members.
6) This truss is designed in accordance with the 2018 International Building Code section 2308.11 and referenced standard ANSI/TPI 1.
7) This truss has been designed for a moving concentrated load of 250.0lb live located at all mid panels and at all panel points along the Top Chord, nonconcurrent with any other live loads.
8) Hanger(s) or other connection device(s) shall be provided sufficient to support concentrated load(s) 80 lb down and 3 lb up at 11-0-0 on bottom chord. The design/selection of such connection device(s) is the responsibility of others.
9) In the LOAD CASE(S) section, loads applied to the face of the truss are noted as front (F) or back (B).

LOAD CASE(S) Standard
1) Dead + Roof Live (balanced): Lumber Increase=1.25, Plate Increase=1.25
Uniform Loads (pf)
Vert: 1-5=-82, 5-9=-82, 12-15=-20
Concentrated Loads (lb)
Vert: 30=-90(F)

3/29/2024, 1:38:28 PM
PRJ-1070918
Adrian Feral



September 7,2022

WARNING - Verify design parameters and READ NOTES ON THIS AND INCLUDED MITEK REFERENCE PAGE MII-7473 rev. 5/19/2020 BEFORE USE.
Design valid for use only with MiTek® connectors. This design is based only upon parameters shown, and is for an individual building component, not a truss system. Before use, the building designer must verify the applicability of design parameters and properly incorporate this design into the overall building design. Bracing indicated is to prevent buckling of individual truss web and/or chord members only. Additional temporary and permanent bracing is always required for stability and to prevent collapse with possible personal injury and property damage. For general guidance regarding the fabrication, storage, delivery, erection and bracing of trusses and truss systems, see ANSI/TPH Quality Criteria, DSB-89 and BCSI Building Component Safety Information available from Truss Plate Institute, 2670 Case Highway, Suite 203 Waldorf, MD 20601



PACIFIC COAST
619-463-3142
INFO@PACIFICCOASTDRAFTING.COM

THE BALLOW RESIDENCE

3543 44TH ST SAN DIEGO, CA 92105

ATTN:
CHRISTIAN BALLOW
619-207-7601
CHRISTIAN@GENEBOWMAN.COM

REVISIONS
3-29-23

PROJECT NO.
PRJ-1070918

PREPARER OF PLAN
ED MAHONY

B2

Symbols

PLATE LOCATION AND ORIENTATION

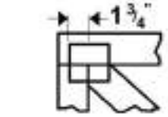

Center plate on joint unless x, y offsets are indicated. Dimensions are in ft-in-sixteenths. Apply plates to both sides of truss and fully embed teeth.

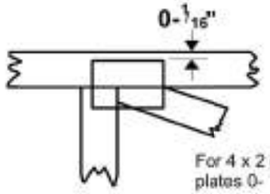

For 4 x 2 orientation, locate plates 0- 1/16" from outside edge of truss.

This symbol indicates the required direction of slots in connector plates.

*** Plate location details available in MiTek 20/20 software or upon request.**

PLATE SIZE

4 x 4

The first dimension is the plate width measured perpendicular to slots. Second dimension is the length parallel to slots.

LATERAL BRACING LOCATION



Indicated by symbol shown and/or by text in the bracing section of the output. Use T or I bracing if indicated.

BEARING



Indicates location where bearings (supports) occur. Icons vary but reaction section indicates joint number where bearings occur. Min size shown is for crushing only.

Industry Standards:

ANSI/TPI1: National Design Specification for Metal Plate Connected Wood Truss Construction.
DSB-89: Design Standard for Bracing.
BCSI: Building Component Safety Information, Guide to Good Practice for Handling, Installing & Bracing of Metal Plate Connected Wood Trusses.

Numbering System

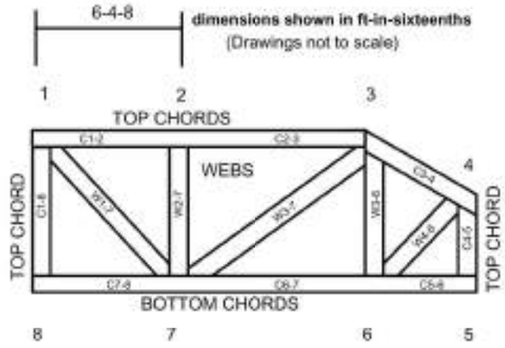

JOINTS ARE GENERALLY NUMBERED/LETTERED CLOCKWISE AROUND THE TRUSS STARTING AT THE JOINT FARTHEST TO THE LEFT.

CHORDS AND WEBS ARE IDENTIFIED BY END JOINT NUMBERS/LETTERS.

PRODUCT CODE APPROVALS

ICC-ES Reports:

ESR-1311, ESR-1352, ESR1988
ER-3907, ESR-2362, ESR-1397, ESR-3282

Trusses are designed for wind loads in the plane of the truss unless otherwise shown.

Lumber design values are in accordance with ANSI/TPI 1 section 6.3 These truss designs rely on lumber values established by others.

© 2012 MiTek® All Rights Reserved

MiTek

MiTek Engineering Reference Sheet: Mii-7473 rev. 5/19/2020

General Safety Notes

Failure to Follow Could Cause Property Damage or Personal Injury

1. Additional stability bracing for truss system, e.g. diagonal or X-bracing, is always required. See BCSI.
2. Truss bracing must be designed by an engineer. For wide truss spacing, individual lateral braces themselves may require bracing, or alternative Tor I bracing should be considered.
3. Never exceed the design loading shown and never stack materials on inadequately braced trusses.
4. Provide copies of this truss design to the building designer, erection supervisor, property owner and all other interested parties.
5. Cut members to bear tightly against each other.
6. Place plates on each face of truss at each joint and embed fully. Knots and wane at joint locations are regulated by ANSI/TPI 1.
7. Design assumes trusses will be suitably protected from the environment in accord with ANSI/TPI 1.
8. Unless otherwise noted, moisture content of lumber shall not exceed 19% at time of fabrication.
9. Unless expressly noted, this design is not applicable for use with fire retardant, preservative treated, or green lumber.
10. Camber is a non-structural consideration and is the responsibility of truss fabricator. General practice is to camber for dead load deflection.
11. Plate type, size, orientation and location dimensions indicated are minimum plating requirements.
12. Lumber used shall be of the species and size, and in all respects, equal to or better than that specified.
13. Top chords must be sheathed or purlins provided at spacing indicated on design.
14. Bottom chords require lateral bracing at 10 ft. spacing or less, if no ceiling is installed, unless otherwise noted.
15. Connections not shown are the responsibility
16. Do not cut or alter truss member or plate without approval of an engineer.
17. Install and load vertically unless indicated otherwise.
18. Use of green or treated lumber may pose unacceptable environmental, health or performance risks. Consult with project engineer before use.
19. Review all portions of this design (front, back, words and pictures) before use. Reviewing pictures alone is not sufficient.
20. Design assumes manufacture in accordance with ANSI/TPI 1 Quality Criteria.
21. The design does not take into account any dynamic or other loads other than those expressly stated.

3/29/2024, 1:38:28 PM
PRJ-1070918
Adrian Feral

PACIFIC COAST
619-463-3142
INFO@PACIFICCOASTDRAFTING.COM

THE BALLOW RESIDENCE

3543 44TH ST

SAN DIEGO, CA 92105

ATTN:
CHRISTIAN BALLOW
619-207-7601
CHRISTIAN@GENEBOWMAN.COM

REVISIONS
3-29-23

PROJECT NO.
PRJ-1070918

PREPARER OF PLAN
ED MAHONY

B3

Ballow CU (ADU) CF1R & MF1R

GENERAL INFORMATION					
01	**Project Name**	Ballow CU			
02	**Run Title**	Title 24 Analysis			
03	**Project Location**	3545 44th Street			
04	**City**	San Diego	05	**Standards Version**	2019
06	**Zip code**	92105	07	**Software Version**	EnergyPro 8.3
08	**Climate Zone**	7	09	**Front Orientation (deg/ Cardinal)**	270
10	**Building Type**	Single family	11	**Number of Dwelling Units**	1
12	**Project Scope**	NewConstruction	13	**Number of Bedrooms**	2
14	**Addition Cond. Floor Area (ft^2)**	0	15	**Number of Stories**	1
16	**Existing Cond. Floor Area (ft^2)**	n/a	17	**Fenestration Average U-factor**	0.3
18	**Total Cond. Floor Area (ft^2)**	792	19	**Glazing Percentage (%)**	14.02%
20	**ADU Bedroom Count**	n/a	21	**ADU Conditioned Floor Area**	n/a
22	**Is Natural Gas Available?**	Yes			

COMPLIANCE RESULTS	
01	**Building Complies with Computer Performance**
02	**This building incorporates features that require field testing and/or verification by a certified HERS rater under the supervision of a CEC-approved HERS provider.**
03	**This building incorporates one or more Special Features shown below**

ENERGY DESIGN RATING				
	Energy Design Ratings		**Compliance Margins**	
	Efficiency[1] (EDR)	**Total[2] (EDR)**	**Efficiency[1] (EDR)**	**Total[2] (EDR)**
Standard Design	56	23.3		
Proposed Design	55.8	23.2	0.2	0.1
RESULT: [3] COMPLIES				

1: Efficiency EDR includes improvements to the building envelope and more efficient equipment
2: Total EDR includes efficiency and demand response measures such as photovoltaic (PV) systems and batteries
3: Building complies when efficiency and total compliance margins are greater than or equal to zero

- Standard Design PV Capacity: 1.78 kWdc
- PV System resized to 1.78 kWdc (a factor of 1.781) to achieve 'Standard Design PV' PV scaling

ENERGY USE SUMMARY				
Energy Use ($kTDV/ft^2$-yr)	**Standard Design**	**Proposed Design**	**Compliance Margin**	**Percent Improvement**
Space Heating	1.28	6.03	-4.75	-371.1
Space Cooling	8.98	6.57	2.41	26.8
IAQ Ventilation	4.89	4.89	0	0
Water Heating	25.2	22.79	2.41	9.6
Self Utilization/Flexibility Credit	n/a	0	0	n/a
Compliance Energy Total	**40.35**	**40.28**	**0.07**	**0.2**

REQUIRED PV SYSTEMS - SIMPLIFIED											
01	02	03	04	05	06	07	08	09	10	11	12
DC System Size (kWdc)	**Exception**	**Module Type**	**Array Type**	**Power Electronics**	**CFI**	**Azimuth (deg)**	**Tilt Input**	**Array Angle (deg)**	**Tilt: (x in 12)**	**Inverter Eff. (%)**	**Annual Solar Access (%)**
1.78	NA	Standard	Fixed		true	150-270	n/a	n/a	<=7:12	96	98

3/29/2024, 1:38:28 PM
PRJ-1070918
Adrian Feral

Ballow CU (ADU) CF1R & MF1R

REQUIRED SPECIAL FEATURES

The following are features that must be installed as condition for meeting the modeled energy performance for this computer analysis.

- Exposed slab floor in conditioned zone

HERS FEATURE SUMMARY

The following is a summary of the features that must be field-verified by a certified HERS Rater as a condition for meeting the modeled energy performance for this computer analysis. Additional detail is provided in the buildng tables below. Registered CF2Rs and CF3Rs are required to be completed in the HERS Registry

Building-level Verifications:
- Indoor air quality ventilation
- Kitchen range hood

Cooling System Verifications:
- Verified Refrigerant Charge

Heating System Verifications:
- Verified heat pump rated heating capacity

HVAC Distribution System Verifications:
- -- None --

Domestic Hot Water System Verifications:
- -- None --

BUILDING - FEATURES INFORMATION

01	02	03	04	05	06	07
Project Name	Conditioned Floor Area (ft^2)	Number of Dwelling Units	Number of Bedrooms	Number of Zones	Number of Ventilation Cooling Systems	Number of Water Heating Systems
Ballow CU	792	1	2	1	0	1

ZONE INFORMATION

01	02	03	04	05	06	07
Zone Name	Zone Type	HVAC System Name	Zone Floor Area (ft^2)	Avg. Ceiling Height	Water Heating System 1	Water Heating System 2
ADU	Conditioned	New Mini-Split1	792	8	DHW Sys 1	N/A

OPAQUE SURFACES

01	02	03	04	05	06	07	08
Name	Zone	Construction	Azimuth	Orientation	Gross Area (ft^2)	Window and Door Area (ft2)	Tilt (deg)
Front Wall ADU	ADU	R-15 Wall	270	Front	288	55	90
Right Wall ADU	ADU	R-15 Wall	180	Right	176	25	90
Back Wall ADU	ADU	R-15 Wall	90	Back	288	32	90
Left Wall ADU	ADU	R-15 Wall	0	Left	176	19	90
Roof (Attic) ADU	ADU	R-30 Roof Attic	n/a	n/a	792	n/a	n/a

ATTIC

01	02	03	04	05	06	07	08
Name	Construction	Type	Roof Rise (x in 12)	Roof Reflectance	Roof Emittance	Radiant Barrier	Cool Roof
Attic ADU	Attic RoofADU	Ventilated	4	0.1	0.85	Yes	No

FENESTRATION / GLAZING

01	02	03	04	05	06	07	08	09	10	11	12	13	14
Name	Type	Surface	Orientation	Azimuth	Width (ft)	Height (ft)	Mult.	Area (ft^2)	U-factor	U-factor Source	SHGC	SHGC Source	Exterior Shading
Window 2	Window	Front Wall ADU	Front	270			1	20	0.3	NFRC	0.23	NFRC	Bug Screen
Window 5	Window	Front Wall ADU	Front	270			1	12	0.3	NFRC	0.23	NFRC	Bug Screen
Window 4	Window	Front Wall ADU	Front	270			1	3	0.3	NFRC	0.23	NFRC	Bug Screen
Window 1	Window	Right Wall ADU	Right	180			1	16	0.3	NFRC	0.23	NFRC	Bug Screen
Window 3	Window	Right Wall ADU	Right	180			1	9	0.3	NFRC	0.23	NFRC	Bug Screen
Window (2) 1	Window	Back Wall ADU	Back	90			1	32	0.3	NFRC	0.23	NFRC	Bug Screen
Window 1.	Window	Left Wall ADU	Left	0			1	16	0.3	NFRC	0.23	NFRC	Bug Screen
Window 4.	Window	Left Wall ADU	Left	0			1	3	0.3	NFRC	0.23	NFRC	Bug Screen

3/29/2024, 1:38:26 PM
PRJ-1070918
Adrian Feral

Ballow CU (ADU) CF1R & MF1R

OPAQUE DOORS			
01	02	03	04
Name	Side of Building	Area (ft^2)	U-factor
Door #1	Front Wall ADU	20	0.5

SLAB FLOORS							
01	02	03	04	05	06	07	08
Name	Zone	Area (ft^2)	Perimeter (ft)	Edge Insul. R-value and Depth	Edge Insul. R-value and Depth	Carpeted Fraction	Heated
Slab-on-Grade ADU	ADU	792	116	none	0	0%	No

OPAQUE SURFACE CONSTRUCTIONS							
01	02	03	04	05	06	07	08
Construction Name	Surface Type	Construction Type	Framing	Total Cavity R-value	Interior / Exterior Continuous R-value	U-factor	Assembly Layers
R-15 Wall	Exterior Walls	Wood Framed Wall	2x4 @ 16 in. O. C.	R-15	None / None	0.095	Inside Finish: Gypsum Board Cavity / Frame: R-15 / 2x4 Exterior Finish: 3 Coat Stucco
Attic RoofADU	Attic Roofs	Wood Framed Ceiling	2x4 @ 24 in. O. C.	R-0	None / None	0.644	Roofing: Light Roof (Asphalt Shingle) Roof Deck: Wood Siding/sheathing/decking Cavity / Frame: no insul. / 2x4
R-30 Roof Attic	Ceilings (below attic)	Wood Framed Ceiling	2x6 @ 24 in. O. C.	R-30	None / None	0.032	Over Ceiling Joists: R-15.7 insul. Cavity / Frame: R-14.3 / 2x6 Inside Finish: Gypsum Board

BUILDING ENVELOPE - HERS VERIFICATION			
01	02	03	04
Quality Insulation Installation (QII)	High R-value Spray Foam Insulation	Building Envelope Air Leakage	CFM50
Not Required	Not Required	Not Required	n/a

WATER HEATING SYSTEMS						
01	02	03	04	05	06	07
Name	System Type	Distribution Type	Water Heater Name (#)	Solar Heating System	Compact Distribution	HERS Verification
DHW Sys 1	Domestic Hot Water (DHW)	Standard Distribution System	DHW Heater 1 (1)	n/a	None	n/a

WATER HEATERS											
01	02	03	04	05	06	07	08	09	10	11	12
Name	Heating Element Type	Tank Type	# of Units	Tank Vol. (gal)	Energy Factor or Efficiency	Input Rating or Pilot	Tank Insulation R-value (Int/Ext)	Standby Loss or Recovery Eff	1st Hr. Rating or Flow Rate	NEEA Heat Pump Brand or Model	Tank Location or Ambient Condition
DHW Heater 1	Gas	Consumer Instantaneous	1	0	0.93-UEF	<= 200 kBtu/hr	0	n/a	n/a	n/a	n/a

WATER HEATING - HERS VERIFICATION							
01	02	03	04	05	06	07	08
Name	Pipe Insulation	Parallel Piping	Compact Distribution	Compact Distribution Type	Recirculation Control	Central DHW Distribution	Shower Drain Water Heat Recovery
DHW Sys 1 - 1/1	Not Required	Not Required	Not Required	None	Not Required	Not Required	Not Required

3/29/2024, 1:38:26 PM
PRJ-1070918
Adrian Feral

Ballow CU (ADU) CF1R & MF1R

SPACE CONDITIONING SYSTEMS

01	02	03	04	05	06	07	08	09	10	11
Name	System Type	Heating Unit Name	Cooling Unit Name	Fan Name	Distribution Name	Required Thermostat Type	Status	Verified Existing Condition	Heating Equipment Count	Cooling Equipment Count
New Mini-Split1	Heat pump heating cooling	Heat Pump System 1	Heat Pump System 1	n/a	n/a	Setback	New	NA	1	1

01	02	03	04	05	06	07	08	09	10	11
HVAC - HEAT PUMPS										
Name	System Type	Number of Units	Heating			Cooling		Zonally Controlled	Compressor Type	HERS Verification
			HSPF/COP	Cap 47	Cap 17	SEER	EER/CEER			
Heat Pump System 1	Ductless MiniSplit HP	1	8.2	24000	15000	14	11.7	Not Zonal	Single Speed	Heat Pump System 1-hers-htpump

HVAC HEAT PUMPS - HERS VERIFICATION

01	02	03	04	05	06	07	08	09
Name	Verified Airflow	Airflow Target	Verified EER	Verified SEER	Verified Refrigerant Charge	Verified HSPF	Verified Heating Cap 47	Verified Heating Cap 17
Heat Pump System 1-hers-htpump	Not Required	0	Not Required	Not Required	Yes	No	Yes	Yes

IAQ (INDOOR AIR QUALITY) FANS

01	02	03	04	05	06	07
Dwelling Unit	IAQ CFM	IAQ Watts/CFM	IAQ Fan Type	IAQ Recovery Effectiveness - SRE	IAQ Recovery Effectiveness - ASRE	HERS Verification
SFam IAQVentRpt	46	0.35	Exhaust	n/a	n/a	Yes

PROJECT NOTES

Energy Pro uses ASHRAE method for HVAC sizing.

CalCERTS, Inc. HERS PROVIDER



3/29/2024, 1:38:28 PM
PRJ-1070918
Adrian Feral

Ballow CU (ADU) CF1R & MF1R

CERTIFICATE OF COMPLIANCE **CF1R-PRF-01E**

Project Name: Ballow CU **Calculation Date/Time:** 2022-08-26T15:35:53-07:00 **(Page 9 of 9)**

Calculation Description: Title 24 Analysis **Input File Name:** BallowADU.ribd19x

DOCUMENTATION AUTHOR'S DECLARATION STATEMENT	
1. I certify that this Certificate of Compliance documentation is accurate and complete.	
Documentation Author Name: Diane Mendoza	Documentation Author Signature: Diane Mendoza
Company: D & R Calcs	Signature Date: 2022-08-26 15:40:56
Address: 14107 Ipava Drive	CEA/ HERS Certification Identification (If applicable): N/A
City/State/Zip: Poway, CA 92064	Phone: 858-486-9506

RESPONSIBLE PERSON'S DECLARATION STATEMENT	
I certify the following under penalty of perjury, under the laws of the State of California: 1. I am eligible under Division 3 of the Business and Professions Code to accept responsibility for the building design identified on this Certificate of Compliance. 2. I certify that the energy features and performance specifications identified on this Certificate of Compliance conform to the requirements of Title 24, Part 1 and Part 6 of the California Code of Regulations. 3. The building design features or system design features identified on this Certificate of Compliance are consistent with the information provided on other applicable compliance documents, worksheets, calculations, plans and specifications submitted to the enforcement agency for approval with this building permit application.	
Responsible Designer Name: Edward Mahony	Responsible Designer Signature: Edward Mahony
Company: Pacific Coast Drafting	Date Signed: 2022-08-26 19:00:57
Address: 930 Thomas Ave. apt. 31	License: na
City/State/Zip: San Diego, CA 92109	Phone: 619-453-3142 4533142

CalCERTS, Inc. HERS PROVIDER

Digitally signed by CalCERTS. This digital signature is provided in order to secure the content of this registered document, and in no way implies Registration Provider responsibility for the accuracy of the information.

Easy to Verify at CalCERTS.com

Registration Number: 222-P010169409A-000-000-0000000-0000

Registration Date/Time: 2022-08-26 19:00:57

HERS Provider: CalCERTS inc.

CA Building Energy Efficiency Standards - 2019 Residential Compliance

Report Version: 2019.2.000
Schema Version: rev 20200901

Report Generated: 2022-08-26 15:36:04

2019 Low-Rise Residential Mandatory Measures Summary

*NOTE: Low-rise residential buildings subject to the Energy Standards must comply with all applicable mandatory measures, regardless of the compliance approach used. Review the respective section for more information. *Exceptions may apply.*
(01/2020)

Building Envelope Measures:	
§ 110.6(a)1:	**Air Leakage.** Manufactured fenestration, exterior doors, and exterior pet doors must limit air leakage to 0.3 CFM per square foot or less when tested per NFRC-400, ASTM E283 or AAMA/WDMA/CSA 101/I.S.2/A440-2011.*
§ 110.6(a)5:	**Labeling.** Fenestration products and exterior doors must have a label meeting the requirements of § 10-111(a).
§ 110.6(b):	**Field fabricated exterior doors and fenestration** products must use U-factors and solar heat gain coefficient (SHGC) values from Tables 110.6-A, 110.6-B, or JA4.5 for exterior doors. They must be caulked and/or weather-stripped.*
§ 110.7:	**Air Leakage.** All joints, penetrations, and other openings in the building envelope that are potential sources of air leakage must be caulked, gasketed, or weather stripped.
§ 110.8(a):	**Insulation Certification by Manufacturers.** Insulation must be certified by the Department of Consumer Affairs, Bureau of Household Goods and Services (BHGS).
§ 110.8(g):	**Insulation Requirements for Heated Slab Floors.** Heated slab floors must be insulated per the requirements of § 110.8(g).
§ 110.8(i):	**Roofing Products Solar Reflectance and Thermal Emittance.** The thermal emittance and aged solar reflectance values of the roofing material must meet the requirements of § 110.8(i) and be labeled per §10-113 when the installation of a cool roof is specified on the CF1R.
§ 110.8(j):	**Radiant Barrier.** When required, radiant barriers must have an emittance of 0.05 or less and be certified to the Department of Consumer Affairs.
§ 150.0(a):	**Ceiling and Rafter Roof Insulation.** Minimum R-22 insulation in wood-frame ceiling; or the weighted average U-factor must not exceed 0.043. Minimum R-19 or weighted average U-factor of 0.054 or less in a rafter roof alteration. Attic access doors must have permanently attached insulation using adhesive or mechanical fasteners. The attic access must be gasketed to prevent air leakage. Insulation must be installed in direct contact with a continuous roof or ceiling which is sealed to limit infiltration and exfiltration as specified in § 110.7, including but not limited to placing insulation either above or below the roof deck or on top of a drywall ceiling.*
§ 150.0(b):	**Loose-fill Insulation.** Loose fill insulation must meet the manufacturer's required density for the labeled R-value.
§ 150.0(c):	**Wall Insulation.** Minimum R-13 insulation in 2x4 inch wood framing wall or have a U-factor of 0.102 or less, or R-20 in 2x6 inch wood framing or have a U-factor of 0.071 or less. Opaque non-framed assemblies must have an overall assembly U-factor not exceeding 0.102. Masonry walls must meet Tables 150.1-A or B.*
§ 150.0(d):	**Raised-floor Insulation.** Minimum R-19 insulation in raised wood framed floor or 0.037 maximum U-factor.*
§ 150.0(f):	**Slab Edge Insulation.** Slab edge insulation must meet all of the following: have a water absorption rate, for the insulation material alone without facings, no greater than 0.3 percent; have a water vapor permeance no greater than 2.0 perm per inch; be protected from physical damage and UV light deterioration; and, when installed as part of a heated slab floor, meet the requirements of § 110.8(g).
§ 150.0(g)1:	**Vapor Retarder.** In climate zones 1 through 16, the earth floor of unvented crawl space must be covered with a Class I or Class II vapor retarder. This requirement also applies to controlled ventilation crawl space for buildings complying with the exception to § 150.0(d).
§ 150.0(g)2:	**Vapor Retarder.** In climate zones 14 and 16, a Class I or Class II vapor retarder must be installed on the conditioned space side of all insulation in all exterior walls, vented attics, and unvented attics with air-permeable insulation.
§ 150.0(q):	**Fenestration Products.** Fenestration, including skylights, separating conditioned space from unconditioned space or outdoors must have a maximum U-factor of 0.58; or the weighted average U-factor of all fenestration must not exceed 0.58.*
Fireplaces, Decorative Gas Appliances, and Gas Log Measures:	
§ 110.5(e)	**Pilot Light.** Continuously burning pilot lights are not allowed for indoor and outdoor fireplaces.
§ 150.0(e)1:	**Closable Doors.** Masonry or factory-built fireplaces must have a closable metal or glass door covering the entire opening of the firebox.
§ 150.0(e)2:	**Combustion Intake.** Masonry or factory-built fireplaces must have a combustion outside air intake, which is at least six square inches in area and is equipped with a readily accessible, operable, and tight-fitting damper or combustion-air control device.*
§ 150.0(e)3:	**Flue Damper.** Masonry or factory-built fireplaces must have a flue damper with a readily accessible control.*
Space Conditioning, Water Heating, and Plumbing System Measures:	
§ 110.0-§ 110.3:	**Certification.** Heating, ventilation and air conditioning equipment, water heaters, showerheads, faucets, and all other regulated appliances must be certified by the manufacturer to the California Energy Commission.*
§ 110.2(a):	**HVAC Efficiency.** Equipment must meet the applicable efficiency requirements in Table 110.2-A through Table 110.2-K.*
§ 110.2(b):	**Controls for Heat Pumps with Supplementary Electric Resistance Heaters.** Heat pumps with supplementary electric resistance heaters must have controls that prevent supplementary heater operation when the heating load can be met by the heat pump alone; and in which the cut-on temperature for compression heating is higher than the cut-on temperature for supplementary heating, and the cut-off temperature for compression heating is higher than the cut-off temperature for supplementary heating.*
§ 110.2(c):	**Thermostats.** All heating or cooling systems not controlled by a central energy management control system (EMCS) must have a setback thermostat.*
§ 110.3(c)4:	**Water Heating Recirculation Loops Serving Multiple Dwelling Units.** Water heating recirculation loops serving multiple dwelling units must meet the air release valve, backflow prevention, pump priming, pump isolation valve, and recirculation loop connection requirements of § 110.3(c)4.
§ 110.3(c)6:	**Isolation Valves.** Instantaneous water heaters with an input rating greater than 6.8 kBtu per hour (2 kW) must have isolation valves with hose bibbs or other fittings on both cold and hot water lines to allow for flushing the water heater when the valves are closed.
§ 110.5:	**Pilot Lights.** Continuously burning pilot lights are prohibited for natural gas: fan-type central furnaces; household cooking appliances (except appliances without an electrical supply voltage connection with pilot lights that consume less than 150 Btu per hour); and pool and spa heaters.*
§ 150.0(h)1:	**Building Cooling and Heating Loads.** Heating and/or cooling loads are calculated in accordance with the ASHRAE Handbook, Equipment Volume, Applications Volume, and Fundamentals Volume; the SMACNA Residential Comfort System Installation Standards Manual; or the ACCA Manual J using design conditions specified in § 150.0(h)2.

2020-08-26 19:36:28 PRJ-1070918 Adrian Feral

§ 150.0(h)3A:	**Clearances.** Air conditioner and heat pump outdoor condensing units must have a clearance of at least five feet from the outlet of any dryer
§ 150.0(h)3B:	**Liquid Line Drier.** Air conditioners and heat pump systems must be equipped with liquid line filter driers if required, as specified by the manufacturer's instructions.
§ 150.0(j)1:	**Storage Tank Insulation.** Unfired hot water tanks, such as storage tanks and backup storage tanks for solar water-heating systems, must have a minimum of R-12 external insulation or R-16 internal insulation where the internal insulation R-value is indicated on the exterior of the tank.
§ 150.0(j)2A:	**Water Piping, Solar Water-heating System Piping, and Space Conditioning System Line Insulation.** All domestic hot water piping must be insulated as specified in Section 609.11 of the California Plumbing Code. In addition, the following piping conditions must have a minimum insulation wall thickness of one inch or a minimum insulation R-value of 7.7: the first five feet of cold water pipes from the storage tank; all hot water piping with a nominal diameter equal to or greater than 3/4 inch and less than one inch; all hot water piping with a nominal diameter less than 3/4 inch that is: associated with a domestic hot water recirculation system, from the heating source to storage tank or between tanks, buried below grade, and from the heating source to kitchen fixtures.*
§ 150.0(j)3:	**Insulation Protection.** Piping insulation must be protected from damage, including that due to sunlight, moisture, equipment maintenance, and wind as required by Section 120.3(b). Insulation exposed to weather must be water retardant and protected from UV light (no adhesive tapes). Insulation covering chilled water piping and refrigerant suction piping located outside the conditioned space must include, or be protected by, a Class I or Class II vapor retarder. Pipe insulation buried below grade must be installed in a waterproof and non-crushable casing or sleeve.
§ 150.0(n)1:	**Gas or Propane Water Heating Systems.** Systems using gas or propane water heaters to serve individual dwelling units must include all of the following: A dedicated 125 volt, 20 amp electrical receptacle connected to the electric panel with a 120/240 volt 3 conductor, 10 AWG copper branch circuit, within three feet of the water heater without obstruction. Both ends of the unused conductor must be labeled with the word "spare" and be electrically isolated. Have a reserved single pole circuit breaker space in the electrical panel adjacent to the circuit breaker for the branch circuit and labeled with the words "Future 240V Use"; a Category III or IV vent, or a Type B vent with straight pipe between the outside termination and the space where the water heater is installed; a condensate drain that is no more than two inches higher than the base of the water heater, and allows natural draining without pump assistance; and a gas supply line with a capacity of at least 200,000 Btu per hour.
§ 150.0(n)2:	**Recirculating Loops.** Recirculating loops serving multiple dwelling units must meet the requirements of § 110.3(c)5.
§ 150.0(n)3:	**Solar Water-heating Systems.** Solar water-heating systems and collectors must be certified and rated by the Solar Rating and Certification Corporation (SRCC), the International Association of Plumbing and Mechanical Officials, Research and Testing (IAPMO R&T), or by a listing agency that is approved by the Executive Director.
Ducts and Fans Measures:	
§ 110.8(d)3:	**Ducts.** Insulation installed on an existing space-conditioning duct must comply with § 604.0 of the California Mechanical Code (CMC). If a contractor installs the insulation, the contractor must certify to the customer, in writing, that the insulation meets this requirement.
§ 150.0(m)1:	**CMC Compliance.** All air-distribution system ducts and plenums must meet the requirements of the CMC §§ 601.0, 602.0, 603.0, 604.0, 605.0 and ANSI/SMACNA-006-2006 HVAC Duct Construction Standards Metal and Flexible 3rd Edition. Portions of supply-air and return-air ducts and plenums must be insulated to a minimum installed level of R-6.0 or a minimum installed level of R-4.2 when ducts are entirely in conditioned space as confirmed through field verification and diagnostic testing (RA3.1.4.3.8). Portions of the duct system completely exposed and surrounded by directly conditioned space are not required to be insulated. Connections of metal ducts and inner core of flexible ducts must be mechanically fastened. Openings must be sealed with mastic, tape, or other duct-closure system that meets the applicable requirements of UL 181, UL 181A, or UL 181B or aerosol sealant that meets the requirements of UL 723. If mastic or tape is used to seal openings greater than ¼ inch, the combination of mastic and either mesh or tape must be used. Building cavities, support platforms for air handlers, and plenums designed or constructed with materials other than sealed sheet metal, duct board or flexible duct must not be used to convey conditioned air. Building cavities and support platforms may contain ducts. Ducts installed in cavities and support platforms must not be compressed to cause reductions in the cross-sectional area.*
§ 150.0(m)2:	**Factory-Fabricated Duct Systems.** Factory-fabricated duct systems must comply with applicable requirements for duct construction, connections, and closures; joints and seams of duct systems and their components must not be sealed with cloth back rubber adhesive duct tapes unless such tape is used in combination with mastic and draw bands.
§ 150.0(m)3:	**Field-Fabricated Duct Systems.** Field-fabricated duct systems must comply with applicable requirements for: pressure-sensitive tapes, mastics, sealants, and other requirements specified for duct construction.
§ 150.0(m)7:	**Backdraft Damper.** Fan systems that exchange air between the conditioned space and outdoors must have backdraft or automatic dampers.
§ 150.0(m)8:	**Gravity Ventilation Dampers.** Gravity ventilating systems serving conditioned space must have either automatic or readily accessible, manually operated dampers in all openings to the outside, except combustion inlet and outlet air openings and elevator shaft vents.
§ 150.0(m)9:	**Protection of Insulation.** Insulation must be protected from damage, sunlight, moisture, equipment maintenance, and wind. Insulation exposed to weather must be suitable for outdoor service. For example, protected by aluminum, sheet metal, painted canvas, or plastic cover. Cellular foam insulation must be protected as above or painted with a coating that is water retardant and provides shielding from solar radiation.
§ 150.0(m)10:	**Porous Inner Core Flex Duct.** Porous inner core flex ducts must have a non-porous layer between the inner core and outer vapor barrier.
§ 150.0(m)11:	**Duct System Sealing and Leakage Test.** When space conditioning systems use forced air duct systems to supply conditioned air to an occupiable space, the ducts must be sealed and duct leakage tested, as confirmed through field verification and diagnostic testing, in accordance with § 150.0(m)11 and Reference Residential Appendix RA3.
§ 150.0(m)12:	**Air Filtration.** Space conditioning systems with ducts exceeding 10 feet and the supply side of ventilation systems must have MERV 13 or equivalent filters. Filters for space conditioning systems must have a two inch depth or can be one inch if sized per Equation 150.0-A. Pressure drops and labeling must meet the requirements in §150.0(m)12. Filters must be accessible for regular service.*
§ 150.0(m)13:	**Space Conditioning System Airflow Rate and Fan Efficacy.** Space conditioning systems that use ducts to supply cooling must have a hole for the placement of a static pressure probe, or a permanently installed static pressure probe in the supply plenum. Airflow must be ≥ 350 CFM per ton of nominal cooling capacity, and an air-handling unit fan efficacy ≤ 0.45 watts per CFM for gas furnace air handlers and ≤ 0.58 watts per CFM for all others. Small duct high velocity systems must provide an airflow ≥ 250 CFM per ton of nominal cooling capacity, and an air-handling unit fan efficacy ≤ 0.62 watts per CFM. Field verification testing is required in accordance with Reference Residential Appendix RA3.3.*

2019 Low-Rise Residential Mandatory Measures Summary

Requirements for Ventilation and Indoor Air Quality:	
§ 150.0(o)1:	**Requirements for Ventilation and Indoor Air Quality**. All dwelling units must meet the requirements of ASHRAE Standard 62.2, Ventilation and Acceptable Indoor Air Quality in Residential Buildings subject to the amendments specified in § 150.0(o)1.
§ 150.0(o)1C:	**Single Family Detached Dwelling Units.** Single family detached dwelling units, and attached dwelling units not sharing ceilings or floors with other dwelling units, occupiable spaces, public garages, or commercial spaces must have mechanical ventilation airflow provided at rates determined by ASHRAE 62.2 Sections 4.1.1 and 4.1.2 and as specified in § 150.0(o)1C.
§ 150.0(o)1E:	**Multifamily Attached Dwelling Units.** Multifamily attached dwelling units must have mechanical ventilation airflow provided at rates in accordance with Equation 150.0-B and must be either a balanced system or continuous supply or continuous exhaust system. If a balanced system is not used, all units in the building must use the same system type and the dwelling-unit envelope leakage must be ≤ 0.3 CFM at 50 Pa (0.2 inch water) per square foot of dwelling unit envelope surface area and verified in accordance with Reference Residential Appendix RA3.8.
§ 150.0(o)1F:	**Multifamily Building Central Ventilation Systems.** Central ventilation systems that serve multiple dwelling units must be balanced to provide ventilation airflow for each dwelling unit served at a rate equal to or greater than the rate specified by Equation 150.0-B. All unit airflows must be within 20 percent of the unit with the lowest airflow rate as it relates to the individual unit's minimum required airflow rate needed for compliance.
§ 150.0(o)1G:	**Kitchen Range Hoods.** Kitchen range hoods must be rated for sound in accordance with Section 7.2 of ASHRAE 62.2.
§ 150.0(o)2:	**Field Verification and Diagnostic Testing.** Dwelling unit ventilation airflow must be verified in accordance with Reference Residential Appendix RA3.7. A kitchen range hood must be verified in accordance with Reference Residential Appendix RA3.7.4.3 to confirm it is rated by HVI to comply with the airflow rates and sound requirements as specified in Section 5 and 7.2 of ASHRAE 62.2.
Pool and Spa Systems and Equipment Measures:	
§ 110.4(a):	**Certification by Manufacturers.** Any pool or spa heating system or equipment must be certified to have all of the following: a thermal efficiency that complies with the Appliance Efficiency Regulations; an on-off switch mounted outside of the heater that allows shutting off the heater without adjusting the thermostat setting; a permanent weatherproof plate or card with operating instructions; and must not use electric resistance heating.*
§ 110.4(b)1:	**Piping.** Any pool or spa heating system or equipment must be installed with at least 36 inches of pipe between the filter and the heater, or dedicated suction and return lines, or built-in or built-up connections to allow for future solar heating.
§ 110.4(b)2:	**Covers.** Outdoor pools or spas that have a heat pump or gas heater must have a cover.
§ 110.4(b)3:	**Directional Inlets and Time Switches for Pools.** Pools must have directional inlets that adequately mix the pool water, and a time switch that will allow all pumps to be set or programmed to run only during off-peak electric demand periods.
§ 110.5:	**Pilot Light.** Natural gas pool and spa heaters must not have a continuously burning pilot light.
§ 150.0(p):	**Pool Systems and Equipment Installation.** Residential pool systems or equipment must meet the specified requirements for pump sizing, flow rate, piping, filters, and valves.*
Lighting Measures:	
§ 110.9:	**Lighting Controls and Components.** All lighting control devices and systems, ballasts, and luminaires must meet the applicable requirements of § 110.9.*
§ 150.0(k)1A:	**Luminaire Efficacy.** All installed luminaires must meet the requirements in Table 150.0-A.
§ 150.0(k)1B:	**Blank Electrical Boxes.** The number of electrical boxes that are more than five feet above the finished floor and do not contain a luminaire or other device must be no greater than the number of bedrooms. These electrical boxes must be served by a dimmer, vacancy sensor control, or fan speed control.
§ 150.0(k)1C:	**Recessed Downlight Luminaires in Ceilings.** Luminaires recessed into ceilings must meet all of the requirements for: insulation contact (IC) labeling; air leakage; sealing; maintenance; and socket and light source as described in § 150.0(k)1C.
§ 150.0(k)1D:	**Electronic Ballasts for Fluorescent Lamps.** Ballasts for fluorescent lamps rated 13 watts or greater must be electronic and must have an output frequency no less than 20 kHz.
§ 150.0(k)1E:	**Night Lights, Step Lights, and Path Lights.** Night lights, step lights and path lights are not required to comply with Table 150.0-A or be controlled by vacancy sensors provided they are rated to consume no more than 5 watts of power and emit no more than 150 lumens.
§ 150.0(k)1F:	**Lighting Integral to Exhaust Fans.** Lighting integral to exhaust fans (except when installed by the manufacturer in kitchen exhaust hoods) must meet the applicable requirements of § 150.0(k).
§ 150.0(k)1G:	**Screw based luminaires.** Screw based luminaires must contain lamps that comply with Reference Joint Appendix JA8.*
§ 150.0(k)1H:	**Light Sources in Enclosed or Recessed Luminaires.** Lamps and other separable light sources that are not compliant with the JA8 elevated temperature requirements, including marking requirements, must not be installed in enclosed or recessed luminaires.
§ 150.0(k)1I:	**Light Sources in Drawers, Cabinets and Linen Closets.** Light sources internal to drawers, cabinetry or linen closets are not required to comply with Table 150.0-A or be controlled by vacancy sensors provided that they are rated to consume no more than 5 watts of power, emit no more than 150 lumens, and are equipped with controls that automatically turn the lighting off when the drawer, cabinet or linen closet is closed.
§ 150.0(k)2A:	**Interior Switches and Controls.** All forward phase cut dimmers used with LED light sources must comply with NEMA SSL 7A.
§ 150.0(k)2B:	**Interior Switches and Controls.** Exhaust fans must be controlled separately from lighting systems.*
§ 150.0(k)2C:	**Interior Switches and Controls.** Lighting must have readily accessible wall-mounted controls that allow the lighting to be manually turned ON and OFF.*
§ 150.0(k)2D:	**Interior Switches and Controls.** Controls and equipment must be installed in accordance with manufacturer's instructions.
§ 150.0(k)2E:	**Interior Switches and Controls.** Controls must not bypass a dimmer, occupant sensor, or vacancy sensor function if the control is installed to comply with § 150.0(k).
§ 150.0(k)2F:	**Interior Switches and Controls.** Lighting controls must comply with the applicable requirements of § 110.9.

8/20/19 Plan Check PRJ-1070918
Adrian Feral

Ballow CU (ADU) CF1R & MF1R

§ 150.0(k)2G:	**Interior Switches and Controls.** An energy management control system (EMCS) may be used to comply with control requirements if it: provides functionality of the specified control according to § 110.9; meets the Installation Certificate requirements of § 130.4; meets the EMCS requirements of § 130.0(e); and meets all other requirements in § 150.0(k)2.
§ 150.0(k)2H:	**Interior Switches and Controls.** A multiscene programmable controller may be used to comply with dimmer requirements in § 150.0(k) if it provides the functionality of a dimmer according to § 110.9, and complies with all other applicable requirements in § 150.0(k)2.
§ 150.0(k)2I:	**Interior Switches and Controls.** In bathrooms, garages, laundry rooms, and utility rooms, at least one luminaire in each of these spaces must be controlled by an occupant sensor or a vacancy sensor providing automatic-off functionality. If an occupant sensor is installed, it must be initially configured to manual-on operation using the manual control required under Section 150.0(k)2C.
§ 150.0(k)2J:	**Interior Switches and Controls.** Luminaires that are or contain light sources that meet Reference Joint Appendix JA8 requirements for dimming, and that are not controlled by occupancy or vacancy sensors, must have dimming controls.*
§ 150.0(k)2K:	**Interior Switches and Controls.** Under cabinet lighting must be controlled separately from ceiling-installed lighting systems.
§ 150.0(k)3A:	**Residential Outdoor Lighting.** For single-family residential buildings, outdoor lighting permanently mounted to a residential building, or to other buildings on the same lot, must meet the requirement in item § 150.0(k)3Ai (ON and OFF switch) and the requirements in either § 150.0(k)3Aii (photocell and either a motion sensor or automatic time switch control) or § 150.0(k)3Aiii (astronomical time clock), or an EMCS.
§ 150.0(k)3B:	**Residential Outdoor Lighting.** For low-rise residential buildings with four or more dwelling units, outdoor lighting for private patios, entrances, balconies, and porches; and residential parking lots and carports with less than eight vehicles per site must comply with either § 150.0(k)3A or with the applicable requirements in Sections 110.9, 130.0, 130.2, 130.4, 140.7 and 141.0.
§ 150.0(k)3C:	**Residential Outdoor Lighting.** For low-rise residential buildings with four or more dwelling units, any outdoor lighting for residential parking lots or carports with a total of eight or more vehicles per site and any outdoor lighting not regulated by § 150.0(k)3B or § 150.0(k)3D must comply with the applicable requirements in Sections 110.9, 130.0, 130.2, 130.4, 140.7 and 141.0.
§ 150.0(k)4:	**Internally illuminated address signs.** Internally illuminated address signs must comply with § 140.8; or must consume no more than 5 watts of power as determined according to § 130.0(c).
§ 150.0(k)5:	**Residential Garages for Eight or More Vehicles.** Lighting for residential parking garages for eight or more vehicles must comply with the applicable requirements for nonresidential garages in Sections 110.9, 130.0, 130.1, 130.4, 140.6, and 141.0.
§ 150.0(k)6A:	**Interior Common Areas of Low-rise Multifamily Residential Buildings.** In a low-rise multifamily residential building where the total interior common area in a single building equals 20 percent or less of the floor area, permanently installed lighting for the interior common areas in that building must be comply with Table 150.0-A and be controlled by an occupant sensor.
§ 150.0(k)6B:	**Interior Common Areas of Low-rise Multifamily Residential Buildings.** In a low-rise multifamily residential building where the total interior common area in a single building equals more than 20 percent of the floor area, permanently installed lighting for the interior common areas in that building must: i. Comply with the applicable requirements in Sections 110.9, 130.0, 130.1, 140.6 and 141.0; and ii. Lighting installed in corridors and stairwells must be controlled by occupant sensors that reduce the lighting power in each space by at least 50 percent. The occupant sensors must be capable of turning the light fully on and off from all designed paths of ingress and egress.
Solar Ready Buildings:	
§ 110.10(a)1:	**Single Family Residences.** Single family residences located in subdivisions with 10 or more single family residences and where the application for a tentative subdivision map for the residences has been deemed complete and approved by the enforcement agency, which do not have a photovoltaic system installed, must comply with the requirements of § 110.10(b) through § 110.10(e).
§ 110.10(a)2:	**Low-rise Multifamily Buildings.** Low-rise multi-family buildings that do not have a photovoltaic system installed must comply with the requirements of § 110.10(b) through § 110.10(d).
§ 110.10(b)1:	**Minimum Solar Zone Area.** The solar zone must have a minimum total area as described below. The solar zone must comply with access, pathway, smoke ventilation, and spacing requirements as specified in Title 24, Part 9 or other parts of Title 24 or in any requirements adopted by a local jurisdiction. The solar zone total area must be comprised of areas that have no dimension less than 5 feet and are no less than 80 square feet each for buildings with roof areas less than or equal to 10,000 square feet or no less than 160 square feet each for buildings with roof areas greater than 10,000 square feet. For single family residences, the solar zone must be located on the roof or overhang of the building and have a total area no less than 250 square feet. For low-rise multi-family buildings the solar zone must be located on the roof or overhang of the building, or on the roof or overhang of another structure located within 250 feet of the building, or on covered parking installed with the building project, and have a total area no less than 15 percent of the total roof area of the building excluding any skylight area. The solar zone requirement is applicable to the entire building, including mixed occupancy.*
§ 110.10(b)2:	**Azimuth.** All sections of the solar zone located on steep-sloped roofs must be oriented between 90 degrees and 300 degrees of true north.
§ 110.10(b)3A:	**Shading.** The solar zone must not contain any obstructions, including but not limited to: vents, chimneys, architectural features, and roof mounted equipment.*
§ 110.10(b)3B:	**Shading.** Any obstruction located on the roof or any other part of the building that projects above a solar zone must be located at least twice the distance, measured in the horizontal plane, of the height difference between the highest point of the obstruction and the horizontal projection of the nearest point of the solar zone, measured in the vertical plane.*
§ 110.10(b)4:	**Structural Design Loads on Construction Documents.** For areas of the roof designated as a solar zone, the structural design loads for roof dead load and roof live load must be clearly indicated on the construction documents.
§ 110.10(c):	**Interconnection Pathways.** The construction documents must indicate: a location reserved for inverters and metering equipment and a pathway reserved for routing of conduit from the solar zone to the point of interconnection with the electrical service; and for single family residences and central water-heating systems, a pathway reserved for routing plumbing from the solar zone to the water-heating system.
§ 110.10(d):	**Documentation.** A copy of the construction documents or a comparable document indicating the information from § 110.10(b) through § 110.10(c) must be provided to the occupant.
§ 110.10(e)1:	**Main Electrical Service Panel.** The main electrical service panel must have a minimum busbar rating of 200 amps.
§ 110.10(e)2:	**Main Electrical Service Panel.** The main electrical service panel must have a reserved space to allow for the installation of a double pole circuit breaker for a future solar electric installation. The reserved space must be permanently marked as “For Future Solar Electric”.



3/29/2024, 1:38:28 PM

PRJ-1070918

Adrian Feral