IDLEWILD
ADUS
3153 IDLE WILD WAY
SAN DIEGO, CA 92117

ABBREVIATIONS

A/C	AIR CONDITIONING
ADJ.	ADJUSTABLE
AFF	ABOVE FINISH FLOOR
APPROX.	APPROXIMATELY AMERICAN
ASTM	SOCIETY FOR TESTING AND MATERIALS
AWG	AMERICAN WIRE GAUGE
BLDG.	BUILDING
BLK.	BLOCK
BIS	BUILDING STANDARD
CBC	CALIFORNIA BUILDING CODE
CLG	CEILING
CLR	CLEAR
CONC.	CONCRETE
CONST.	CONSTRUCTION
CONT.	CONTINUOUS
CO.	COMPANY
DBL.	DOUBLE
DIA.,	DIAMETER
DIAG.	DIAGONAL
DIM.	DIMENSION
DN.	DOWN
DTL, DETL	DETAIL
DWG.	DRAWING
E.	EAST
EA.	EACH
EL, ELEV	ELEVATION
ELECT.	ELECTRICAL
EQ.	EQUAL
EQUIP.	EQUIPMENT
E.W.	EACH WAY
(E)	EXISTING
EXT.	EXTERIOR
FIN.	FINISH
FLUOR.	FLUORESCENT
FLR	FLOOR
FT.	FOOT
GA.	GAUGE
GALV.	GALVANIZE(D)
GC	GENERAL CONTRACTOR
GRND	GROUND
GWB	GYPSUM WALL BOARD
HDWD.	HARDWOOD
HORIZ.	HORIZONTAL
HR	HOUR
HT.	HEIGHT
HVAC	HEATING, VENTING AND AIR CONDITIONING
I.D.	INSIDE DIA.
IN.	INCH
INFO.	INFORMATION
INSUL.	INSULATION
INT.	INTERIOR
LB(S)	POUND(S)
MAX.	MAXIMUM
MECH	MECHANICAL
MTL	METAL
MFR.	MANUFACTURER
MGR	MANAGER
MIN	MINIMUM
MISC	MISCELLANEOUS
N.	NORTH
N/A	NOT APPLICABLE
N/C	NOT IN CONTRACT
NTS	NOT TO SCALE
O/C	ON CENTER
OD	OUTSIDE DIAMETER
OPG.	OPENING
OPP	OPPOSITE
PLYWD.	PLYWOOD
PR	PAIR
PROJ	PROJECT
PROP	PROPERTY
PT	PRESSURE TREATED
REQ'D	REQUIRED
RM	ROOM
R.O.	ROUGH OPENING
S	SOUTH
SCHED	SCHEDULE
SHT	SHEET
SIM.	SIMILAR
SPEC.	SPECIFICATION
SQ.	SQUARE
SS	STAINLESS STEEL
STL	STEEL
STRUC.	STRUCTURAL
SUSP.	SUSPENDED
S.V.	SHEET VINYL
THRU	THROUGH
TNND	TINNED
T.O.C.	TOP OF CONCRETE
T.O.M.	TOP OF MASONRY
TS	TUBE STEEL
TYP.	TYPICAL
UL	UNDERWRITERS LAB
UNO	UNLESS NOTED OTHERWISE
VERT.	VERTICAL
VIF	VERIFY IN FIELD
VT	VINYL TILE
W	WEST
W/	WITH
WDW	WINDOW
W/O	WITHOUT
W.P.	WORKING POINT

BUILDING DEPARTMENT/GENERAL NOTES

1. THE CONTRACTOR SHALL VERIFY ALL DIMENSIONS AND ELEVATIONS BEFORE STARTING WORK AND SHALL NOTIFY THE OWNER OF ANY DISCREPANCIES FOUND. DO NOT SCALE DRAWINGS.
2. ALL WORK SHALL COMPLY TO THE CALIFORNIA RESIDENTIAL CODE, 2025 EDITION.
3. THESE PLANS AND ALL WORK SHALL COMPLY WITH THE CALIFORNIA BUILDING STANDARDS CODE FOUND IN STATE OF CALIFORNIA TITLE 24 CCR AS AMENDED AND ADOPTED BY THE COUNTY OF SAN DIEGO.
4. CONSTRUCTION LOAD (MATERIAL AND EQUIPMENT) SHALL NOT EXCEED THE DESIGN LIVE LOAD PER SQUARE FOOT. PROVIDE ADEQUATE SHORING AND/OR BRACING WHERE STRUCTURES HAVE NOT ATTAINED DESIGN STRENGTH.
5. WHERE NO CONSTRUCTION DETAILS ARE SHOWN OR NOTED FOR ANY PART OF THE WORK TO BE DONE THE DETAILS SHALL BE THE SAME AS FOR OTHER SIMILAR WORK.
6. THE CONTRACTOR SHALL DETERMINE THE LOCATION OF ALL UTILITY SERVICES IN THE AREA TO BE EXCAVATED (ABOVE AND BELOW GRADE) PRIOR TO COMMENCING THE WORK TO BE DONE.
7. SHOULD ANY LOOSE FILL/EXPANSIVE SOIL/GROUND WATER OR OTHER DANGEROUS CONDITIONS BE ENCOUNTERED DURING SITE EXCAVATION THE GENERAL CONTRACTOR, OWNER AND ENGINEER SHALL BE NOTIFIED AND ALL WORK SHALL CEASE IMMEDIATELY.
8. THE INSPECTOR WILL RECHECK FOR EXPANSIVE SOILS AND/OR GRADING REQUIREMENTS AT THE FIRST FOUNDATION INSPECTION.
9. SMOKE DETECTORS ARE REQUIRED IN EACH SLEEPING ROOM AND IN THE HALLWAY/AREA SERVING EACH SLEEPING AREA. BATTERY OPERATED DETECTORS ARE ACCEPTABLE FOR EXISTING CONSTRUCTION.
10. PER CITY OF SAN DIEGO MUNICIPAL CODE SECTIONS 12.0104, 43.010, 129.0104(A)(4), AND 142.0220, PERMITS ARE REQUIRED TO BE INSPECTED BY CITY INSPECTION STAFF TO ENSURE COMPLIANCE WITH ISSUED CONSTRUCTION PERMIT. THIS INCLUDES, BUT NOT LIMITED TO, STORM WATER COMPLIANCE INSPECTION REQUIREMENTS ASSOCIATED WITH EACH PERMIT.
11. ALL STORM WATER RUNOFF FROM PROPOSED AND/OR REPLACED IMPERVIOUS AREAS SHALL BE ROUTED TO PERVIOUS SURFACES OR LANDSCAPING PRIOR TO REACHING THE PUBLIC DRAIN SYSTEM.
12. EXISTING HOME DOES NOT HAVE FIRE SPRINKLERS THEREFORE, FIRE SPRINKLERS IS EXEMPT FOR THE ADUS.
13. PER CITY OF SAN DIEGO MUNICIPAL CODE SECTIONS 12.0104, 43.0310, 129.0104(A)(4), AND 142.0220, PERMITS ARE REQUIRED TO BE INSPECTED BY CITY INSPECTION STAFF TO ENSURE COMPLIANCE WITH ISSUED CONSTRUCTION PERMIT. THIS INCLUDES, BUT IS NOT LIMITED TO, STORM WATER COMPLIANCE INSPECTION REQUIREMENTS ASSOCIATED WITH EACH PERMIT.

CONTRACTOR'S NOTES

1. PLEASE RECYCLE DEMOLITION AND CONSTRUCTION WASTE. ASK ABOUT POSSIBLE DUMP SITES.
2. CONTRACTOR SHALL COMPLY WITH ALL OSHA REQUIREMENTS.
3. TEMPERED GLASS SHALL BE PERMANENTLY IDENTIFIED AND VISIBLE WHEN THE UNIT IS GLAZED.
4. ALL NEW GLAZING (FENESTRATION) WILL BE INSTALLED WITH A CERTIFYING LABEL ATTACHED., SHOWING THE U-VALUE.

ENVIRONMENTAL HEALTH NOTES

1. SEWAGE DISPOSAL SHALL CONFORM TO COUNTY OF SAN DIEGO DEPARTMENT OF PUBLIC HEALTH, DIVISION OF SANITATION REQUIREMENTS AND DETAILS FOR INDIVIDUAL HOMES.
2. HOME IS LOCATED IN THE SAN DIEGO WATER DISTRICT.

PLUMBING NOTES

1. ALL PLUMBING TO CONFORM TO THE CALIFORNIA PLUMBING CODE AND LOCAL AND OSHA REQUIREMENTS.
2. PLUMBING SHOWN IS FOR LOCATION ONLY.
3. PLUMBER TO VERIFY LOCATION OF SEWER AND WATER LOCATIONS SHOWN.
4. ALL SEWER PIPES SHALL BE 3" MIN. DIAMETER UNDERGROUND AND TOILET: 1 1/2" DIAMETER FOR BASIN, BATH AND VENT PIPES - VERIFY SIZE AND MATERIAL TO COMPLY WITH ALL STATE AND LOCAL CODES.
5. ALL HOT AND COLD WATER SUPPLY SHALL BE MIN. 1/2" DIAMETER PEX.
6. MATERIAL FOR SANITARY SYSTEMS SHALL BE ABS.

VICINITY MAP

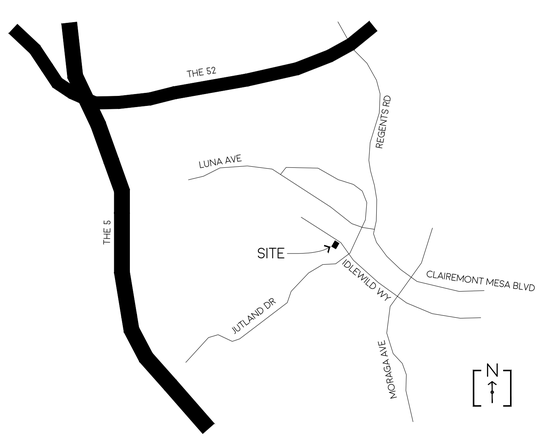

SCOPE OF WORK

THE PROJECT CONSISTS OF THE CONSTRUCTION OF TWO NEW DUPLEXES, CONTAINING FOUR ADUS TOTAL. TWO ADUS WILL BE MARKET RATE, ONE ADU WILL BE MODERATE INCOME RESTRICTED, AND ONE ADU WILL BE BONUS MARKET RATE. THIS PROJECT PROPOSES AN ASSUMED PROPERTY LINE WHICH WILL HAVE A ZERO LOT LINE.

DEFERRED ITEMS: FIRE SPRINKLER SYSTEM

PROJECT OWNER:
CHRISTIAN BALLOW
BALLOW CONSTRUCTION
8250 VICKERS ST
SAN DIEGO, CA 92111

ASSESSOR'S PARCEL NUMBER:
359-172-06-00

ZONE:
RS-1-7

OVERLAY ZONES:
NONE KNOWN

LOT SIZE:
5,793 SF

EXISTING USE:
SINGLE FAMILY HOUSE

PROPOSED USE:
UNCHANGED

OCCUPANCY:
R-3

LEGAL DESCRIPTION:
MAP 2954
BLOCK NO
LOT NO 2603
CLAIRMONT UNIT 2

DENSITY:
(1) EXISTING HOUSE
(2) NEW DUPLEX (4 ADUS)

FINANCIALLY RESPONSIBLE:
MMTM SIX, LLC
CHRISTIAN BALLOW
8250 VICKERS STREET, SUITE A
SAN DIEGO, CA 92111

TYPE OF CONSTRUCTION:
TYPE V-B, UNSPRINKLERED

YEAR OF CONSTRUCTION:

EXISTING HOUSE =	1954	
FLOOR AREA RATIO:		
BASE FAR = (0.59) X 5793=	3417	SF ALLOWABLE
EXISTING HOUSE =	899	SF
EXISTING GARAGE:	291	SF
EXISTING TOTAL::	1190	SF
REMAINING:	2227	SF
NEW ADU 1 =	430	SF
NEW ADU 2 =	430	SF
NEW ADU 3 =	650	SF
NEW ADU 4 =	650	SF
NEW ADU AREA TOTAL:	2160	SF
PROVIDED =	3350	SF
ALLOWED:	3417	SF
PROVIDED:	3350	SF
NEW DECK/ STAIRS AREA:		
ADU 3:	48	SF
ADU 4:	48	SF
AREA SUMMARY:		
EXISTING HOUSE:	899	SF
EXISTING GARAGE:	291	SF
NEW ADU 1 (MODERATE INCOME)=	430	SF
NEW ADU 2 (MARKET RATE)=	430	SF
NEW ADU 3 (MARKET RATE)=	650	SF
NEW ADU 4 (MARKET RATE)=	650	SF
NEW DECK =	96	SF

ADU TYPES	RATE	SPRINKLERED
NEW ADU 1	MODERATE INCOME	YES - NFPA 13D
NEW ADU 2 (BONUS)	MARKET	YES - NFPA 13D
NEW ADU 3	MARKET	NO
NEW ADU 4	MARKET	NO

PROJECT TEAM

ARCHITECT:
SAWAYA ARCHITECTURE
3565 7TH AVENUE
SAN DIEGO, CA 92103
(619) 916-8145

STRUCTURAL ENGINEER:
MORGAN STRUCTURAL ENGINEERING
460 E. 6TH AVENUE
ESCONDIDO, CA 92025
(760) 690-7454

SHEET INDEX

TS1.0	TITLE SHEET
TS2.0	BMP NOTES
TS3.0	CALGREEN NOTES
TS3.1	CALGREEN NOTES
C1	SURVEY
A1.0	SITE PLAN
A1.1	BMP PLAN
A2.0	LEVEL 1 FLOOR PLAN, OPENING SCHEDULE
A2.1	LEVEL 2 FLOOR PLAN, OPENING SCHEDULE
A2.2	ROOF PLAN
A3.0	BUILDING SECTIONS
A4.0	EXTERIOR ELEVATIONS
A4.1	EXTERIOR ELEVATIONS
A5.1	LEVEL 1 ELECTRICAL PLAN
A5.1	LEVEL 2 ELECTRICAL PLAN
A7.0	DETAILS
A7.1	DETAILS
A7.2	DETAILS
S1.0	GENERAL NOTES
S1.1	TYPICAL CONCRETE DETAILS
S1.2	TYPICAL WOOD DETAILS
S1.3	TYPICAL WOOD DETAILS
S2.0	FOUNDATION PLAN
S2.1	LOWER FLOOR FRAMING PLAN
S2.2	ROOF FRAMING PLAN
S3.0	STRUCTURAL DETAILS
S4.0	STRUCTURAL DETAILS
T24.1	TITLE 24
T24.2	TITLE 24
T24.3	TITLE 24
T24.4	TITLE 24
T24.5	TITLE 24
L1	LANDSCAPE PLAN

ALL WORK SHALL COMPLY WITH THE FOLLOW APPLICABLE CODES:
CALIFORNIA RESIDENTIAL CODE, 2025 EDITION
CALIFORNIA PLUMBING CODE, 2025 EDITION
CALIFORNIA MECHANICAL CODE, 2025 EDITION
CALIFORNIA ELECTRICAL CODE, 2025 EDITION
CALIFORNIA FIRE CODE, 2025 EDITION
TITLE 24 ENERGY STANDARDS, 2025 EDITION
IN THE EVENT OF CONFLICT, THE MOST RESTRICTIVE CODE SHALL PREVAIL

NOTE:
AN ELECTRONICALLY SIGNED AND REGISTERED INSTALLATION CERTIFICATE(S) (CF2R) POSTED BY THE INSTALLING CONTRACTOR SHALL BE SUBMITTED TO THE FIELD INSPECTOR DURING CONSTRUCTION AT THE BUILDING SITE. A REGISTERED CF2R WILL HAVE A UNIQUE 21-DIGIT REGISTRATION NUMBER FOLLOWED BY FOUR ZEROS LOCATED AT THE BOTTOM OF EACH PAGE. THE FIRST 12 DIGITS OF THE NUMBER WILL MATCH THE REGISTRATION NUMBER OF THE ASSOCIATED CF1R. CERTIFICATE OF OCCUPANCY WILL NOT BE ISSUED UNTIL FORMS CF2R IS REVIEWED AND APPROVED.

AN ELECTRONICALLY SIGNED AND REGISTERED CERTIFICATE(S) OF FIELD VERIFICATION AND DIAGNOSTIC TESTING (CF3R) SHALL BE POSTED AT THE BUILDING SITE BY A CERTIFIED HERS RATER. A REGISTERED CF3R WILL HAVE A UNIQUE 25-DIGIT REGISTRATION NUMBER LOCATED AT THE BOTTOM OF EACH PAGE. THE FIRST 20 DIGITS OF THE NUMBER WILL MATCH THE REGISTRATION NUMBER OF THE ASSOCIATED CF2R. CERTIFICATE OF OCCUPANCY WILL NOT BE ISSUED UNTIL CF3R IS REVIEWED AND APPROVED.""

LICENSED ARCHITECT
CHRISTOPHER SAWAYA
C35763
REN: 06-30-27
STATE OF CALIFORNIA

SAWAYA ARCHITECTURE
3565 7TH AVENUE
SAN DIEGO, CA 92103
SAWAYAARCHITECTURE.COM
(619) 916 - 8145

IDLEWILD
ADUS

3153 IDLEWILD WAY
3153 IDLEWILD WY UNIT 1
3153 IDLEWILD WY UNIT 2
3153 IDLEWILD WY UNIT 3
3153 IDLEWILD WY UNIT 4

SAN DIEGO, CA 92117

DATE	BY	ISSUE DESCRIPTION
03-10-26	CC	SUBMITTAL

SAWAYA ARCHITECTURE

TS1.0
TITLE SHEET

2603
PRINT TO SCALE : 24" X 36"

Development Services

THE CITY OF SAN DIEGO

FORM
DS-560
September 2021

Stormwater Requirements Applicability Checklist

Project Address: 3153 Idlewild way

Project Number:

SECTION 1: Construction Stormwater Best Management Practices (BMP) Requirements

All construction sites are required to implement construction BMPs per the performance standards in the Stormwater Standards Manual. Some sites are also required to obtain coverage under the State Construction General Permit (CGP)[1], administered by the California State Water Resources Control Board.

For all projects, complete Part A - If the project is required to submit a Stormwater Pollution Prevention Plan (SWPPP) or Water Pollution Control Plan (WPCP), continue to Part B.

PART A – Determine Construction Phase Stormwater Requirements

1. Is the project subject to California's statewide General National Pollutant Discharge Elimination System (NPDES) permit for Stormwater Discharges Associated with Construction Activities, also known as the State Construction General Permit (CGP)? (Typically projects with land disturbance greater than or equal to 1 acre.)
   ○ Yes, SWPPP is required; skip questions 2-4. ◉ No; proceed to the next question.
2. Does the project propose construction or demolition activity, including but not limited to, clearing, grading, grubbing, excavation, or any other activity resulting in ground disturbance and/or contact with stormwater?
   ◉ Yes, WPCP is required; skip questions 3-4. ○ No; proceed to the next question.
3. Does the project propose routine maintenance to maintain the original line and grade, hydraulic capacity, or original purpose of the facility? (Projects such as pipeline/utility replacement)
   ○ Yes, WPCP is required; skip question 4. ◉ No; proceed to the next question.
4. Does the project only include the following Permit types listed below?
   - Electrical Permit, Fire Alarm Permit, Fire Sprinkler Permit, Plumbing Permit, Sign Permit, Mechanical Permit, Spa Permit.
   - Individual Right of Way Permits that exclusively include only ONE of the following activities: water service, sewer lateral, or utility service.
   - Right of Way Permits with a project footprint less than 150 linear feet that exclusively include only ONE of the following activities: curb ramp, sidewalk and driveway apron replacement, potholing, curb and gutter replacement, and retaining wall encroachments.

   ☐ Yes, no document is required.

Check one of the boxes below and continue to Part B

○ **If you checked "Yes" for question 1**, an SWPPP is REQUIRED - **continue to Part B**

◉ **If you checked "No" for question 1 and checked "Yes" for question 2 or 3**, a WPCP is REQUIRED. If the project proposes less than 5,000 square feet of ground disturbance AND has less than a 5-foot elevation change over the entire project area, a Minor WPCP may be required instead. **Continue to Part B**

○ **If you check "No" for all questions 1-3 and checked "Yes" for question 4**, Part B does not apply, and no document is required. **Continue to Section 2.**

[1] More information on the City's construction BMP requirements as well as CGP requirements can be found at http://www.sandiego.gov/stormwater/regulations/index.shtml

CLEAR FORM

PART B – Determine Construction Site Priority

This prioritization must be completed within this form, noted on the plans, and included in the SWPPP or WPCP. The city reserves the right to adjust the priority of projects both before and after construction. Construction projects are assigned an inspection frequency based on if the project has a "high threat to water quality." The City has aligned the local definition of "high threat to water quality" to the risk determination approach of the State Construction General Permit (CGP). The CGP determines risk level based on project specific sediment risk and receiving water risk. Additional inspection is required for projects within the Areas of Special Biological Significance (ASBS) watershed. **NOTE:** The construction priority does **NOT** change construction BMP requirements that apply to projects; rather, it determines the frequency of inspections that will be conducted by city staff.

Complete Part B and continue to Section 2

☐ **1. ASBS**
   A. Projects located in the ASBS watershed.

☐ **2. High Priority**
   A. Projects that qualify as Risk Level 2 or Risk Level 3 per the Construction General Permit (CGP) and are not located in the ASBS watershed.
   B. Projects that qualify as LUP Type 2 or LUP Type 3 per the CGP and are not located in the ASBS watershed.

☐ **3. Medium Priority**
   A. Projects that are not located in an ASBS watershed or designated as a High priority site.
   B. Projects that qualify as Risk Level 1 or LUP Type 1 per the CGP and are not located in an ASBS watershed.
   C. WPCP projects (>5,000 square feet of ground disturbance) located within the Los Peñasquitos watershed management area.

☑ **4. Low Priority**
   A. Projects not subject to a Medium or High site priority designation and are not located in an ASBS watershed.

Section 2: Construction Stormwater BMP Requirements

Additional information for determining the requirements is found in the Stormwater Standards Manual.

PART C – Determine if Not Subject to Permanent Stormwater Requirements

Projects that are considered maintenance or otherwise not categorized as "new development projects" or "redevelopment projects" according to the Stormwater Standards Manual are not subject to Permanent Stormwater BMPs.

- **If "yes" is checked for any number in Part C**: Proceed to Part F and check "Not Subject to Permanent Stormwater BMP Requirements."
- **If "no" is checked for all the numbers in Part C:** Continue to Part D.

1. Does the project only include interior remodels and/or is the project entirely within an existing enclosed structure and does not have the potential to contact stormwater?
   ○ Yes ◉ No
2. Does the project only include the construction of overhead or underground utilities without creating new impervious surfaces?
   ○ Yes ◉ No
3. Does the project fall under routine maintenance? Examples include but are not limited to roof or exterior structure surface replacement, resurfacing or reconfiguring surface parking lots or existing roadways without expanding the impervious footprint, and routine replacement of damaged pavement (grinding, overlay and pothole repair).
   ○ Yes ◉ No

CLEAR FORM

PART D – PDP Exempt Requirements

PDP Exempt projects are required to implement site design and source control BMPs.

- **If "yes" is checked for any questions in Part D**, continue to Part F and check the box labeled "PDP Exempt."
- **If "no" is checked for all questions in Part D**, continue to Part E.

1. Does the project ONLY include new or retrofit sidewalks, bicycle lanes, or trails that:
   - Are designed and constructed to direct stormwater runoff to adjacent vegetated areas, or other non-erodible permeable areas? Or;
   - Are designed and constructed to be hydraulically disconnected from paved streets and roads? Or;
   - Are designed and constructed with permeable pavements or surfaces in accordance with the Green Streets guidance in the City's Stormwater Standards manual?

   ○ Yes, PDP exempt requirements apply ◉ No, proceed to next question
2. Does the project ONLY include retrofitting or redeveloping existing paved alleys, streets or roads designed and constructed in accordance with the Green Streets guidance in the City's Stormwater Standards Manual?

   ○ Yes, PDP exempt requirements apply ◉ No, proceed to next question

PART E – Determine if Project is a Priority Development Project (PDP)

Projects that match one of the definitions below are subject to additional requirements, including preparation of a Stormwater Quality Management Plan (SWQMP).

- **If "yes" is checked for any number in Part E**, continue to Part F and check the box labeled "Priority Development Project."
- **If "no" is checked for every number in Part E**, continue to Part F and check the box labeled "Standard Development Project."

1. **New development that creates 10,000 square feet or more of impervious surfaces collectively over the project site.** This includes commercial, industrial, residential, mixed-use, and public development projects on public or private land. ○ Yes ◉ No
2. **Redevelopment project that creates and/or replaces 5,000 square feet or more of impervious surfaces on an existing site of 10,000 square feet or more of impervious surfaces.** This includes commercial, industrial, residential, mixed-use, and public development projects on public or private land. ○ Yes ◉ No
3. **New development or redevelopment of a restaurant.** Facilities that sell prepared foods and beverages for consumption, including stationary lunch counters and refreshment stands selling prepared foods and drinks for immediate consumption (Standard Industrial Classification (SIC) 5812), and where the land development creates and/or replaces 5,000 square feet or more of impervious surface. ○ Yes ◉ No
4. **New development or redevelopment on a hillside.** The project creates and/or replaces 5,000 square feet or more of impervious surface (collectively over the project site) and where the development will grade on any natural slope that is twenty-five percent or greater. ○ Yes ◉ No
5. **New development or redevelopment of a parking lot that creates and/or replaces 5,000 square feet or more of impervious surface (collectively over the project site).** ○ Yes ◉ No
6. **New development or redevelopment of streets, roads, highways, freeways, and driveways.** The project creates and/or replaces 5,000 square feet or more of impervious surface (collectively over the project site). ○ Yes ◉ No

CLEAR FORM

7. **New development or redevelopment discharging directly to an environmentally sensitive area.** The project creates and/or replaces 2,500 square feet of impervious surface (collectively over the project site), and discharges directly to an Environmentally Sensitive Area (ESA). "Discharging directly to" includes flow that is conveyed overland a distance of 200 feet or less from the project to the ESA, or conveyed in a pipe or open channel any distance as an isolated flow from the project to the ESA (i.e. not commingled with flows from adjacent lands). ○ Yes ◉ No
8. **New development or redevelopment projects of retail gasoline outlet (RGO) that create and/or replaces 5,000 square feet of impervious surface.** The development project meets the following criteria: (a) 5,000 square feet or more or (b) has a projected Average Daily Traffic (ADT) of 100 or more vehicles per day. ○ Yes ◉ No
9. **New development or redevelopment projects of an automotive repair shop that creates and/or replaces 5,000 square feet or more of impervious surfaces.** Development projects categorized in any one of Standard Industrial Classification (SIC) codes 5013, 5014, 5541, 7532-7534 or 7536-7539. ○ Yes ◉ No
10. **Other Pollutant Generating Project.** These projects are not covered in any of the categories above but involve the disturbance of one or more acres of land and are expected to generate post-construction phase pollutants, including fertilizers and pesticides. This category does not include projects creating less than 5,000 square feet of impervious area and projects containing landscaping without a requirement for the regular use of fertilizers and pesticides (such as a slope stabilization project using native plants). Impervious area calculations need not include linear pathways for infrequent vehicle use, such as emergency maintenance access or bicycle and pedestrian paths if the linear pathways are built with pervious surfaces or if runoff from the pathway sheet flows to adjacent pervious areas. ○ Yes ◉ No

PART F – Select the appropriate category based on the outcomes of Part C through Part E

1. The project is **NOT SUBJECT TO PERMANENT STORMWATER REQUIREMENTS** ○ Yes ○ No
2. The project is a **STANDARD DEVELOPMENT PROJECT**. Site design and source control BMP requirements apply. See the Stormwater Standards Manual for guidance. ◉ Yes ○ No
3. The Project is **PDP EXEMPT**. Site design and source control BMP requirements apply. Refer to the Stormwater Standards Manual for guidance. ○ Yes ○ No
4. The project is a **PRIORITY DEVELOPMENT PROJECT**. Site design, source control and structural pollutant control BMP requirements apply. Refer to the Stormwater Standards Manual for guidance on determining if the project requires hydromodification plan management. ○ Yes ○ No

CHRIS SAWAYA (AGENT)	ARCHITECT
Name of Owner or Agent	**Title**
Signature	02/26/2025
	Date

CLEAR FORM

STORM WATER QUALITY NOTES- CONSTRUCTION BMPs

This project shall comply with all current requirements of the State Permit, California Regional Water Quality Control Board (SDRWQCB), San Diego Municipal Storm Water Permit, The City of San Diego Land Development Code, and the Storm Water Standards Manual.

PRIOR TO ANY SOIL DISTURBANCE, TEMPORARY SEDIMENT CONTROLS SHALL BE INSTALLED BY THE CONTRACTOR OR QUALIFIED PERSON(S) AS INDICATED BELOW:

1. ALL REQUIREMENTS OF THE CITY OF SAN DIEGO "STORM WATER STANDARDS MANUAL" MUST BE INCORPORATED INTO THE DESIGN AND CONSTRUCTION OF THE PROPOSED GRADING/IMPROVEMENTS CONSISTENT WITH THE APPROVED STORM WATER POLLUTION PREVENTION PLAN (SWPPP) AND/OR WATER POLLUTION CONTROL PLAN (WPCP) FOR CONSTRUCTION LEVEL BMPS AND, IF APPLICABLE, THE STORM WATER QUALITY MANAGEMENT PLAN (SWQMP) FOR POST-CONSTRUCTION BMPS.

2. THE CONTRACTOR SHALL INSTALL AND MAINTAIN ALL STORM DRAIN INLET PROTECTION. INLET PROTECTION IN THE PUBLIC RIGHT-OF-WAY MUST BE TEMPORARILY REMOVED PRIOR TO A RAIN EVENT TO ENSURE NO FLOODING OCCURS AND REINSTALLED AFTER RAIN IS OVER.

3. ALL CONSTRUCTION BMPS SHALL BE INSTALLED AND PROPERLY MAINTAINED THROUGHOUT THE DURATION OF CONSTRUCTION.

4. THE CONTRACTOR SHALL ONLY GRADE, INCLUDING CLEARING AND GRUBBING, AREAS FOR WHICH THE CONTRACTOR OR QUALIFIED CONTACT PERSON CAN PROVIDE EROSION AND SEDIMENT CONTROL MEASURES.

5. THE CONTRACTOR IS RESPONSIBLE FOR ENSURING THAT ALL SUB-CONTRACTORS AND SUPPLIERS ARE AWARE OF ALL STORM WATER BMPS AND IMPLEMENT SUCH MEASURES. FAILURE TO COMPLY WITH THE APPROVED SWPPP/WPCP WILL RESULT IN THE ISSUANCE OF CORRECTION NOTICES, CITATIONS, CIVIL PENALTIES, AND/OR STOP WORK NOTICES. 6. THE CONTRACTOR OR QUALIFIED CONTACT PERSON SHALL BE RESPONSIBLE FOR CLEANUP OF ALL SILT, DEBRIS, AND MUD ON AFFECTED AND ADJACENT STREET(S) AND WITHIN STORM DRAIN SYSTEM DUE TO CONSTRUCTION VEHICLES/EQUIPMENT AND CONSTRUCTION ACTIVITY AT THE END OF EACH WORK DAY.

7. THE CONTRACTOR SHALL PROTECT NEW AND EXISTING STORM WATER CONVEYANCE SYSTEMS FROM SEDIMENTATION, CONCRETE RINSE, OR OTHER CONSTRUCTION-RELATED DEBRIS AND DISCHARGES WITH THE APPROPRIATE BMPS THAT ARE ACCEPTABLE TO THE CITY RESIDENT ENGINEER AND AS INDICATED IN THE SWPPP/WPCP.

8. THE CONTRACTOR OR QUALIFIED CONTACT PERSON SHALL CLEAR DEBRIS, SILT, AND MUD FROM ALL DITCHES AND SWALES PRIOR TO AND WITHIN 3 BUSINESS DAYS AFTER EACH RAIN EVENT OR PRIOR TO THE NEXT RAIN EVENT, WHICHEVER IS SOONER.

9. IF A NON-STORM WATER DISCHARGE LEAVES THE SITE, THE CONTRACTOR SHALL IMMEDIATELY STOP THE ACTIVITY AND REPAIR THE DAMAGES. THE CONTRACTOR SHALL NOTIFY THE CITY RESIDENT ENGINEER OF THE DISCHARGE. PRIOR TO RESUMING CONSTRUCTION ACTIVITY, ANY AND ALL WASTE MATERIAL, SEDIMENT, AND DEBRIS FROM EACH NON-STORM WATER DISCHARGE SHALL BE REMOVED FROM THE STORM DRAIN CONVEYANCE SYSTEM AND PROPERLY DISPOSED OF BY THE CONTRACTOR.

10. EQUIPMENT AND WORKERS FOR EMERGENCY WORK SHALL BE MADE AVAILABLE AT ALL TIMES. ALL NECESSARY MATERIALS SHALL BE STOCKPILED ONSITE AT CONVENIENT LOCATIONS TO FACILITATE RAPID DEPLOYMENT OF CONSTRUCTION BMPS WHEN RAIN IS IMMINENT.

11. THE CONTRACTOR SHALL RESTORE AND MAINTAIN ALL EROSION AND SEDIMENT CONTROL BMPS TO WORKING ORDER YEAR-ROUND.

12. THE CONTRACTOR SHALL INSTALL ADDITIONAL EROSION AND SEDIMENT CONTROL MEASURES DUE TO UNFORESEEN CIRCUMSTANCES TO PREVENT NON-STORM WATER AND SEDIMENT-LADEN DISCHARGES.

13. THE CONTRACTOR SHALL BE RESPONSIBLE AND SHALL TAKE NECESSARY PRECAUTIONS TO PREVENT PUBLIC TRESPASS ONTO AREAS WHERE IMPOUNDED WATERS CREATE A HAZARDOUS CONDITION.

14. ALL EROSION AND SEDIMENT CONTROL MEASURES PROVIDED PER THE APPROVED SWPPP/WPCP SHALL BE INSTALLED AND MAINTAINED. ALL EROSION AND SEDIMENT CONTROLS FOR INTERIM CONDITIONS SHALL BE PROPERLY DOCUMENTED AND INSTALLED TO THE SATISFACTION OF THE CITY RESIDENT ENGINEER.

15. AS NECESSARY, THE CITY RESIDENT ENGINEER SHALL SCHEDULE MEETINGS FOR THE PROJECT TEAM (GENERAL CONTRACTOR, QUALIFIED CONTACT PERSON, EROSION CONTROL SUBCONTRACTOR (IF ANY), ENGINEER OF WORK, OWNER/DEVELOPER, AND THE CITY RESIDENT ENGINEER) TO EVALUATE THE ADEQUACY OF THE EROSION AND SEDIMENT CONTROL MEASURES AND OTHER BMPS RELATIVE TO ANTICIPATED CONSTRUCTION ACTIVITIES.

18. THE CONTRACTOR OR QUALIFIED CONTACT PERSON SHALL CONDUCT VISUAL INSPECTIONS AND MAINTAIN ALL BMPS DAILY AND AS NEEDED. VISUAL INSPECTIONS AND MAINTENANCE OF ALL BMPS SHALL BE CONDUCTED BEFORE, DURING, AND AFTER EVERY RAIN EVENT AND EVERY 24 HOURS DURING ANY PROLONGED RAIN EVENT. THE CONTRACTOR SHALL MAINTAIN AND REPAIR ALL BMPS AS SOON AS POSSIBLE AS SAFETY ALLOWS.

17. **CONSTRUCTION ENTRANCE AND EXIT AREA.** TEMPORARY CONSTRUCTION ENTRANCE AND EXITS SHALL BE CONSTRUCTED IN ACCORDANCE WITH CASQA FACT SHEET TC-1 OR CAL TRANS FACT SHEET TC-01 TO PREVENT TRACKING OF SEDIMENT AND OTHER POTENTIAL POLLUTANTS ONTO PAVED SURFACES AND TRAVELED WAYS. WIDTH SHALL BE 10' OR THE MINIMUM NECESSARY TO ACCOMMODATE VEHICLES AND EQUIPMENT WITHOUT BY-PASSING THE ENTRANCE. (a) NON-STORM WATER DISCHARGES SHALL BE EFFECTIVELY MANAGED PER THE SAN DIEGO MUNICIPAL CODE CHAPTER 6, ARTICLE 3, DIVISION 3 "STORM WATER MANAGEMENT AND DISCHARGE CONTROL".

updated: 10/1/2018

LICENSED ARCHITECT
CHRISTOPHER SAWAYA
C35343
REN: 06-30-27
STATE OF CALIFORNIA

SAWAYA ARCHITECTURE

3565 7TH AVENUE
SAN DIEGO, CA 92103
SAWAYAARCHITECTURE.COM
(619) 916 - 8145

IDLEWILD
ADUS

3153 IDLEWILD WAY

3153 IDLEWILD WY UNIT 1
3153 IDLEWILD WY UNIT 2
3153 IDLEWILD WY UNIT 3
3153 IDLEWILD WY UNIT 4

SAN DIEGO, CA 92117

DATE	BY	ISSUE DESCRIPTION
03-10-26	CC	SUBMITTAL

SAWAYA ARCHITECTURE

TS2.0
BMP NOTES

2603
PRINT TO SCALE - 24" X 36"

2025 CALIFORNIA GREEN BUILDING STANDARDS CODE
RESIDENTIAL MANDATORY MEASURES, SHEET 1

Y = YES
N/A = NOT APPLICABLE
RESPOR. PARTY = RESPONSIBLE PARTY (ie: ARCHITECT, ENGINEER, OWNER, CONTRACTOR, INSPECTOR ETC.)

CHAPTER 3
GREEN BUILDING
SECTION 301 GENERAL

301.1 SCOPE. Buildings shall be designed to include the green building measures specified as mandatory in the application checklists contained in this code. Voluntary green building measures are also included in the application checklists and may be included in the design and construction of structures covered by this code, but are not required unless adopted by a city, county, or city and county as specified in Section 101.7.

301.1.1 Additions and alterations. [HCD] The mandatory provisions of Chapter 4 shall be applied to additions or alterations of existing residential buildings where the addition or alteration increases the building's conditioned area, volume, or size. The requirements shall apply only to and/or within the specific area of the addition or alteration.

The mandatory provision of Section 4.106.4.2 may apply to additions or alterations of existing parking facilities or the addition of new parking facilities serving existing multifamily buildings. See Section 4.106.4.3 for application.

Note: Repairs including, but not limited to, resurfacing, restriping and repairing or maintaining existing lighting fixtures are not considered alterations for the purpose of this section.

Note: On and after January 1, 2014, residential buildings undergoing permitted alterations, additions, or improvements shall replace noncompliant plumbing fixtures with water-conserving plumbing fixtures. Plumbing fixture replacement is required prior to issuance of a certificate of final completion, certificate of occupancy or final permit approval by the local building department. See Civil Code Section 1101.1, et seq., for the definition of a noncompliant plumbing fixture, types of residential buildings affected and other important enactment dates.

301.2 LOW-RISE AND HIGH-RISE RESIDENTIAL BUILDINGS. [HCD] The provisions of individual sections of CALGreen may apply to either low-rise residential buildings high-rise residential buildings, or both. Individual sections will be designated by banners to indicate where the section applies specifically to low-rise only (LR) or high-rise only (HR). When the section applies to both low-rise and high-rise buildings, no banner will be used.

SECTION 302 MIXED OCCUPANCY BUILDINGS

302.1 MIXED OCCUPANCY BUILDINGS. In mixed occupancy buildings, each portion of a building shall comply with the specific green building measures applicable to each specific occupancy.
Exceptions:
1. [HCD] Accessory structures and accessory occupancies serving residential buildings shall comply with Chapter 4 and Appendix A4, as applicable.
2. [HCD] For purposes of CALGreen, live/work units, complying with Section 419 of the *California Building Code*, shall not be considered mixed occupancies. Live/Work units shall comply with Chapter 4 and Appendix A4, as applicable.

DIVISION 4.1 PLANNING AND DESIGN

ABBREVIATION DEFINITIONS:

HCD	Department of Housing and Community Development
BSC	California Building Standards Commission
DSA-SS	Division of the State Architect, Structural Safety
OSHPD	Office of Statewide Health Planning and Development
LR	Low Rise
HR	High Rise
AA	Additions and Alterations
N	New

CHAPTER 4
RESIDENTIAL MANDATORY MEASURES

SECTION 4.102 DEFINITIONS
4.102.1 DEFINITIONS
The following terms are defined in Chapter 2 *(and are included here for reference)*

FRENCH DRAIN. A trench, hole or other depressed area loosely filled with rock, gravel, fragments of brick or similar pervious material used to collect or channel drainage or runoff water.

WATTLES. Wattles are used to reduce sediment in runoff. Wattles are often constructed of natural plant materials such as hay, straw or similar material shaped in the form of tubes and placed on a downflow slope. Wattles are also used for perimeter and inlet controls.

4.106 SITE DEVELOPMENT
4.106.1 GENERAL. Preservation and use of available natural resources shall be accomplished through evaluation and careful planning to minimize negative effects on the site and adjacent areas. Preservation of slopes, management of storm water drainage and erosion controls shall comply with this section.

4.106.2 STORM WATER DRAINAGE AND RETENTION DURING CONSTRUCTION. Projects which disturb less than one acre of soil and are not part of a larger common plan of development which in total disturbs one acre or more, shall manage storm water drainage during construction. In order to manage storm water drainage during construction, one or more of the following measures shall be implemented to prevent flooding of adjacent property, prevent erosion and retain soil runoff on the site.

1. Retention basins of sufficient size shall be utilized to retain storm water on the site.
2. Where storm water is conveyed to a public drainage system, collection point, gutter or similar disposal method, water shall be filtered by use of a barrier system, wattle or other method approved by the enforcing agency.
3. Compliance with a lawfully enacted storm water management ordinance.

Note: Refer to the State Water Resources Control Board for projects which disturb one acre or more of soil, or are part of a larger common plan of development which in total disturbs one acre or more of soil.

(Website: https://www.waterboards.ca.gov/water_issues/programs/stormwater/construction.html)

4.106.3 GRADING AND PAVING. Construction plans shall indicate how the site grading or drainage system will manage all surface water flows to keep water from entering buildings. Examples of methods to manage surface water include, but are not limited to, the following:

1. Swales
2. Water collection and disposal systems
3. French drains
4. Water retention gardens
5. Other water measures which keep surface water away from buildings and aid in groundwater recharge.

Exception: Additions and alterations not altering the drainage path.

4.106.4 Electric vehicle (EV) charging for new construction. New construction shall comply with Section 4.106.4.1 or 4.106.4.2. Electric vehicle supply equipment (EVSE) shall comply with the *California Electrical Code*.

Exceptions:
1. On a case-by-case basis, where the local enforcing agency has determined EV charging and infrastructure are not feasible based upon one or more of the following conditions:
   1.1 Where there is no local utility power supply or the local utility is unable to supply adequate power.
   1.2 Where there is evidence suitable to the local enforcing agency substantiating that additional local utility infrastructure design requirements, directly related to the implementation of Section 4.106.4, may adversely impact the construction cost of the project.
2. Accessory Dwelling Units (ADU) and Junior Accessory Dwelling Units (JADU) without additional parking facilities.

4.106.4.1 New one- and two-family dwellings and townhouses with attached private garages. For each dwelling unit, install a listed raceway to accommodate a dedicated 208/240-volt branch circuit. The raceway shall not be less than trade size 1 (nominal 1-inch inside diameter). The raceway shall originate at the main service or subpanel and shall terminate into a listed cabinet, box or other enclosure in close proximity to the proposed location of an EV charger. Raceways are required to be continuous at enclosed, inaccessible or concealed areas and spaces. The service panel and/or subpanel shall provide capacity to install a 40-ampere 208/240-volt minimum dedicated branch circuit and space(s) reserved to permit installation of a branch circuit overcurrent protective device.

Exemption: A raceway is not required if a minimum 40-ampere 208/240-volt dedicated EV branch circuit is installed in close proximity to the proposed location of an EV charger at the time of original construction in accordance with the *California Electrical Code*.

4.106.4.1.1 Identification. The service panel or subpanel circuit directory shall identify the overcurrent protective device space(s) reserved for future EV charging as "EV CAPABLE". The raceway termination location shall be permanently and visibly marked as "EV CAPABLE".

4.106.4.2 New multifamily dwellings, hotels and motels and new residential parking facilities.
When parking is provided, parking spaces for new multifamily dwellings, hotels and motels shall meet the requirements of Section 4.106.4.2.2. Calculations for spaces shall be rounded up to the nearest whole number. A parking space served by electric vehicle supply equipment or designed as an EV charging space shall count as at least one standard automobile parking space only for the purpose of complying with any applicable minimum parking space requirements established by a local jurisdiction. See Vehicle Code Section 22511.2 for further details.

4.106.4.2.1 Reserved.

4.106.4.2.2 Multifamily dwellings, hotels and motels

1. EV ready parking spaces with receptacles.

a. Multifamily parking facilities with assigned parking. Where dwelling units are provided with assigned parking spaces equal to or greater than the number of dwelling units, at least one low power Level 2 EV charging receptacle shall be provided at an assigned parking space for each dwelling unit.

1. Where the total number of dwelling units exceeds the number of assigned parking spaces, all assigned parking spaces shall be provided with one low power Level 2 EV charging receptacle.

Exception: Areas of parking facilities served by parking lifts, including but not limited to, automated mechanical-access open parking garages as defined in the California Building Code; or parking facilities otherwise incapable of supporting electric vehicle charging.

b. Multifamily parking facilities with unassigned parking. Where dwelling units are provided with unassigned parking spaces equal to or greater than the number of dwelling units, at least one low power Level 2 EV charging receptacle shall be provided at an unassigned parking space for each dwelling unit.

1. Where the total number of dwelling units exceeds the number of unassigned parking spaces, all unassigned parking spaces shall be provided with one low power Level 2 EV charging receptacle.

Exception: Areas of parking facilities served by parking lifts, including but not limited to, automated mechanical-access open parking garages as defined in the California Building Code; or parking facilities otherwise incapable of supporting electric vehicle charging.

3. Multifamily parking facilities with assigned and unassigned parking. Where multifamily buildings are provided with both assigned and unassigned parking spaces equal to or greater than the number of dwelling units, at least one low power Level 2 EV charging receptacle shall be provided for each dwelling unit at either the assigned or unassigned parking space, but not both.

d. Receptacle power source. EV charging receptacles in multifamily parking facilities at assigned parking spaces shall be provided with a dedicated branch circuit connected to the dwelling unit's electrical panel, unless determined as infeasible by the project builder or designer and subject to concurrence of the local enforcing agency.

Exception: Areas of parking facilities served by parking lifts, including but not limited to, automated mechanical-access open parking garages as defined in the California Building Code; or parking facilities otherwise incapable of supporting electric vehicle charging.

e. Receptacle configurations. 208/240V EV charging receptacles shall comply with one of the following configurations:
1. For 20-ampere receptacles, NEMA 6-20R
2. For 30-ampere receptacles, NEMA 14-30R
3. For 50-ampere receptacles, NEMA 14-50R

2. EV ready parking spaces with EV chargers

a .Multifamily parking facilities with unassigned or common use parking. In addition to the low power Level 2 EV charging receptacle requirements of Section 4.106.4.2.2 (1), twenty-five (25) percent of unassigned or common use parking spaces not already provided with low power Level 2 EV charging receptacles, pursuant to Section 4.106.4.2.2 (1), shall be equipped with Level 2 EV chargers and shall be made available for use by all residents or guests.

b. EV charger connectors. EV chargers shall be equipped with J1772 or J3400 connectors.

c. An automatic load management system (ALMS) may be used to reduce the maximum required electrical capacity to each space served by the ALMS. The electrical system and any on-site distribution transformers shall have sufficient capacity to deliver at least 3.3 kW simultaneously to each EV charging station (EVCS) served by the ALMS. The branch circuit shall have a minimum capacity of 40 amperes, and installed EV chargers shall have a capacity of not less than 30 amperes.

4.106.4.2.2.1 Electric vehicle charging stations (EVCS).
Electric vehicle charging stations required by Section 4.106.4.2.2, Item 2, with EV chargers installed shall comply with Section 4.106.4.2.2.1.1.

Exception: Electric vehicle charging stations serving public accommodations, public housing, motels and hotels shall not be required to comply with this section. See *California Building Code*, Chapter 11B, for applicable requirements.

4.106.4.2.2.1.1 Electric vehicle charging stations (EVCS) spaces with EV chargers installed; dimensions and location.

EVCS spaces shall be designed to comply with the following:

1. The minimum length of each EVCS space shall be 18 feet (5486 mm).
2. The minimum width of each EVCS space shall be 9 feet (2743 mm).
3. One in every 25 EVCS spaces, but not less than one, shall also have an 8-foot (2438 mm) wide minimum aisle. A 5-foot (1524 mm) wide minimum aisle shall be permitted provided the minimum width of the EVCS space is 12 feet (3658 mm). Surface slope for this EVCS space and the aisle shall not exceed 1 unit vertical in 48 units horizontal (2.083 percent slope) in any direction. These EVCS spaces shall also comply with at least one of the following:

   a. The EVCS space shall be located adjacent to an accessible parking space meeting the requirements of the *California Building Code*, Chapter 11A, to allow use of the EV charger from the accessible parking space.

   b. The EVCS space shall be located on an accessible route, as defined in the *California Building Code*, Chapter 2, to the building.

Exception: Electric vehicle charging stations designed and constructed in compliance with the *California Building Code*, Chapter 11B, are not required to comply with Section 4.106.4.2.2.1.1.

4.106.4.2.2.1.2 Accessible electric vehicle charging station spaces.
In addition to the requirements in Section 4.106.4.2.2.1.1, all EV chargers, where installed, shall comply with the accessibility provisions for EV chargers in the *California Building Code*, Chapter 11B. EV ready spaces and EVCS in multifamily developments shall comply with *California Building Code*, Chapter 11A, Section 1109A.

4.106.4.2.3 Reserved.

4.106.4.2.4 Reserved.

4.106.4.2.5 Electric vehicle ready space signage.
Electric vehicle ready spaces shall be identified by signage or pavement markings, in compliance with Caltrans Traffic Operations Policy Directive 13-01 (Zero Emission Vehicle Signs and Pavement Markings) or its successor(s).

4.106.4.2.6 Hotels and motels.

1. EV ready parking spaces with receptacles.

a. Hotels and motels. Forty (40) percent of the total number of parking spaces shall be equipped with low power Level 2 EV charging receptacles.

Exception: Areas of parking facilities served by parking lifts, including but not limited to automated mechanical-access open parking garages as defined in the California Building Code; or parking facilities otherwise incapable of supporting electric vehicle charging.

b. Receptacle configurations. 208/240V EV charging receptacles shall comply with one of the following configurations:
1.For 20- ampere receptacles, NEMA 6-20R
2.For 30- ampere receptacles, NEMA 14-30R
3.For 50- ampere receptacles, NEMA 14-50R2.

2. EV Ready parking spaces with EV chargers.

a. Hotels and motels. Twenty-five (25) percent of the total number of parking spaces shall be equipped with Level 2 EV chargers.

b. EV charger connectors. EV chargers shall be equipped with J1772 or J3400 connectors.

Exception: Areas of parking facilities served by parking lifts, including but not limited to, automated mechanical-access open parking garages as defined in the California Building Code; or parking facilities otherwise incapable of supporting electric vehicle charging.

c. An automatic load management system (ALMS) may be used to reduce the maximum required electrical capacity to each space served by the ALMS. The electrical system and any on-site distribution transformers shall have sufficient capacity to deliver at least 3.3 kW simultaneously to each EV charging station (EVCS) served by the ALMS. The branch circuit shall have a minimum capacity of 40 amperes, and installed EV chargers shall have a capacity of not less than 30 amperes.

4.106.4.3 Electric vehicle charging for additions and alterations of parking facilities serving existing multi-family buildings, hotels and motels.
When existing parking facilities are altered or new parking spaces are added to existing parking facilities, and the work requires a building permit, each parking space added or altered shall have access to either a low power Level 2 EV charging receptacle or Level 2 EV charger, unless determined as infeasible by the project builder or designer and subject to concurrence of the local enforcing agency.

Exception: Where work requiring a permit is being performed for the installation of 120-volt electrical receptacle(s) for level 1 EV charging.

4.106.4.4 Bicycle parking. Bicycle parking shall comply with Sections 4.106.4.4.1 through 4.106.4.4.3.

4.106.4.4.1 Short-term bicycle parking for multifamily buildings, hotels and motels. Provide on-site bicycle parking at a ratio of one parking space for every 10,000 square feet, but not less than two spaces. Short-term bicycle parking shall be located within 200 feet of building entrances, and readily visible to passers-by. *Acceptable* parking facilities shall be conveniently accessed from the street and may include, but not be limited to:
1.Permanently anchored bicycle parking devices, racks, or lockers in an unsheltered, open area.
2.Covered or uncovered enclosures with permanently anchored bicycle parking devices or racks.

4.106.4.4.2 Long-term bicycle parking for multifamily buildings.
Provide on-site bicycle parking at a ratio of one parking space for every two dwelling units. Acceptable parking facilities shall be conveniently accessed from the street and may include, but not be limited to:
1. Covered, lockable enclosures with permanently anchored bicycle parking devices or racks.
2. Lockable bicycle storage rooms with permanently anchored bicycle parking devices or racks.
3. Lockable, weatherproof, permanently anchored bicycle lockers.

4.106.4.4.3 Long-term bicycle parking for hotel and motel buildings.
Provide one on-site long-term bicycle parking space for every 25,000 square feet, but not less than two. Acceptable parking facilities shall be conveniently accessed from the street and may include, but not be limited to:
1. Covered, lockable enclosures with permanently anchored bicycle parking devices or racks.
2. Lockable bicycle storage rooms with permanently anchored bicycle parking devices or racks.
3. Lockable, weatherproof, permanently anchored bicycle lockers.

DIVISION 4.2 ENERGY EFFICIENCY

4.201 GENERAL
4.201.1 SCOPE. For the purposes of mandatory energy efficiency standards in this code, the California Energy Commission will continue to adopt mandatory standards.

DIVISION 4.3 WATER EFFICIENCY AND CONSERVATION

4.303 INDOOR WATER USE
4.303.1 WATER CONSERVING PLUMBING FIXTURES AND FITTINGS. Plumbing fixtures (water closets and urinals) and fittings (faucets and showerheads) shall comply with the sections 4.303.1.1, 4.303.1.2, 4.303.1.3, and 4.303.4.4.

Note: All noncompliant plumbing fixtures in any residential real property shall be replaced with water-conserving plumbing fixtures. Plumbing fixture replacement is required prior to issuance of a certificate of final completion, certificate of occupancy, or final permit approval by the local building department. See Civil Code Section 1101.1, et seq., for the definition of a noncompliant plumbing fixture, types of residential buildings affected and other important enactment dates.

4.303.1.1 Water Closets. The effective flush volume of all water closets shall not exceed 1.28 gallons per flush. Tank-type water closets shall be certified to the performance criteria of the U.S. EPA WaterSense Specification for Tank-type Toilets.

Note: The effective flush volume of dual flush toilets is defined as the composite, average flush volume of two reduced flushes and one full flush.

4.303.1.2 Urinals. The effective flush volume of wall mounted urinals shall not exceed 0.125 gallons per flush. The effective flush volume of all other urinals shall not exceed 0.5 gallons per flush.

4.303.1.3 Showerheads.

4.303.1.3.1 Single Showerhead. Showerheads shall have a maximum flow rate of not more than 1.8 gallons per minute at 80 psi. Showerheads shall be certified to the performance criteria of the U.S. EPA WaterSense Specification for Showerheads.

4.303.1.3.2 Multiple showerheads serving one shower. When a shower is served by more than one showerhead, the combined flow rate of all the showerheads and/or other shower outlets controlled by a single valve shall not exceed 1.8 gallons per minute at 80 psi, or the shower shall be designed to only allow one shower outlet to be in operation at a time.

Note: A hand-held shower shall be considered a showerhead.

4.303.1.4 Faucets.

4.303.1.4.1 Residential Lavatory Faucets. The maximum flow rate of residential lavatory faucets shall not exceed 1.2 gallons per minute at 60 psi. The minimum flow rate of residential lavatory faucets shall not be less than 0.8 gallons per minute at 20 psi.

4.303.1.4.2 Lavatory Faucets in Common and Public Use Areas. The maximum flow rate of lavatory faucets installed in common and public use areas (outside of dwellings or sleeping units) in residential buildings shall not exceed 0.5 gallons per minute at 60 psi.

4.303.1.4.3 Metering Faucets. Metering faucets when installed in residential buildings shall not deliver more than 0.2 gallons per cycle.

4.303.1.4.4 Kitchen Faucets. The maximum flow rate of kitchen faucets shall not exceed 1.8 gallons per minute at 60 psi. Kitchen faucets may temporarily increase the flow above the maximum rate, but not to exceed 2.2 gallons per minute at 60 psi, and must default to a maximum flow rate of 1.8 gallons per minute at 60 psi.

Note: Where complying faucets are unavailable, aerators or other means may be used to achieve reduction.

4.303.1.4.5 Pre-rinse spray valves.
When installed, commercial pre-rinse spray values shall meet the requirements in the California Plumbing Code, Section 420.3.

4.303.2 Submeters for multifamily buildings and dwelling units in mixed-used residential/commercial buildings.
Submeters shall be installed to measure water usage of individual rental dwelling units in accordance with the *California Plumbing Code*.

4.303.3 Standards for plumbing fixtures and fittings. Plumbing fixtures and fittings shall be installed in accordance with the *California Plumbing Code*, and shall meet the applicable standards referenced in Table 1701.1 of the *California Plumbing Code*.

4.304 OUTDOOR WATER USE
4.304.1 OUTDOOR POTABLE WATER USE IN LANDSCAPE AREAS. Residential developments shall comply with a local water efficient landscape ordinance or the current California Department of Water Resources' Model Water Efficient Landscape Ordinance (MWELO), whichever is more stringent.

NOTES:

1. The Model Water Efficient Landscape Ordinance (MWELO) is located in the *California Code Regulations,* Title 23, Chapter 2.7, Division 2. MWELO and supporting documents, including water budget calculator, are available at: https://www.water.ca.gov/

DIVISION 4.4 MATERIAL CONSERVATION AND RESOURCE EFFICIENCY

4.406 ENHANCED DURABILITY AND REDUCED MAINTENANCE
4.406.1 RODENT PROOFING. Annular spaces around pipes, electric cables, conduits or other openings in sole/bottom plates at exterior walls shall be protected against the passage of rodents by closing such openings with cement mortar, concrete masonry or a similar method acceptable to the enforcing agency.

4.408 CONSTRUCTION WASTE REDUCTION, DISPOSAL AND RECYCLING
4.408.1 CONSTRUCTION WASTE MANAGEMENT. Recycle and/or salvage for reuse a minimum of 65 percent of the non-hazardous construction and demolition waste in accordance with either Section 4.408.2, 4.408.3 or 4.408.4, or meet a more stringent local construction and demolition waste management ordinance.

Exceptions:

1. Excavated soil and land-clearing debris.
2. Alternate waste reduction methods developed by working with local agencies if diversion or recycle facilities capable of compliance with this item do not exist or are not located reasonably close to the jobsite.
3. The enforcing agency may make exceptions to the requirements of this section when isolated jobsites are located in areas beyond the haul boundaries of the diversion facility.

4.408.2 CONSTRUCTION WASTE MANAGEMENT PLAN. Submit a construction waste management plan in conformance with Items 1 through 5. The construction waste management plan shall be updated as necessary and shall be available during construction for examination by the enforcing agency.

1. Identify the construction and demolition waste materials to be diverted from disposal by recycling, reuse on the project or salvage for future use or sale.
2. Specify if construction and demolition waste materials will be sorted on-site (source separated) or bulk mixed (single stream).
3. Identify diversion facilities where the construction and demolition waste material collected will be taken.
4. Identify construction methods employed to reduce the amount of construction and demolition waste generated.
5. Specify that the amount of construction and demolition waste materials diverted shall be calculated by weight or volume, but not by both.

4.408.3 WASTE MANAGEMENT COMPANY. Utilize a waste management company, approved by the enforcing agency, which can provide verifiable documentation that the percentage of construction and demolition waste material diverted from the landfill complies with Section 4.408.1.

Note: The owner or contractor may make the determination if the construction and demolition waste materials will be diverted by a waste management company.

4.408.4 WASTE STREAM REDUCTION ALTERNATIVE [LR]. Projects that generate a total combined weight of construction and demolition waste disposed of in landfills, which do not exceed 3.4 lbs./sq.ft. of the building area shall meet the minimum 65% construction waste reduction requirement in Section 4.408.1

4.408.4.1 WASTE STREAM REDUCTION ALTERNATIVE. Projects that generate a total combined weight of construction and demolition waste disposed of in landfills, which do not exceed 2 pounds per square foot of the building area, shall meet the minimum 65% construction waste reduction requirement in Section 4.408.1

4.408.5 DOCUMENTATION. Documentation shall be provided to the enforcing agency which demonstrates compliance with Section 4.408.2, items 1 through 5, Section 4.408.3 or Section 4.408.4..

Notes:

1. Sample forms found in "A Guide to the California Green Building Standards Code (Residential)" located at www.hcd.ca.gov/CALGreen.html may be used to assist in documenting compliance with this section.
2. Mixed construction and demolition debris (C & D) processors can be located at the California Department of Resources Recycling and Recovery (CalRecycle).

4.410 BUILDING MAINTENANCE AND OPERATION
4.410.1 OPERATION AND MAINTENANCE MANUAL. At the time of final inspection, a manual, compact disc, web-based reference or other media acceptable to the enforcing agency which includes all of the following shall be placed in the building:

1. Directions to the owner or occupant that the manual shall remain with the building throughout the life cycle of the structure.
2. Operation and maintenance instructions for the following:
   a. Equipment and appliances, including water-saving devices and systems, HVAC systems, photovoltaic systems, electric vehicle chargers, water-heating systems and other major appliances and equipment.
   b. Roof and yard drainage, including gutters and downspouts.
   c. Space conditioning systems, including condensers and air filters.
   d. Landscape irrigation systems.
   e. Water reuse systems.
3. Information from local utility, water and waste recovery providers on methods to further reduce resource consumption, including recycle programs and locations.
4. Public transportation and/or carpool options available in the area.
5. Educational material on the positive impacts of an interior relative humidity between 30-60 percent and what methods an occupant may use to maintain the relative humidity level in that range.
6. Information about water-conserving landscape and irrigation design and controllers which conserve water.
7. Instructions for maintaining gutters and downspouts and the importance of diverting water at least 5 feet away from the foundation.
8. Information on required routine maintenance measures, including, but not limited to, caulking, painting, grading around the building, etc.
9. Information about state solar energy and incentive programs available.
10. A copy of all special inspections verifications required by the enforcing agency or this code.
11. Information from the Department of Forestry and Fire Protection on maintenance of defensible space around residential structures.
12. Information and/or drawings identifying the location of grab bar reinforcements.

4.410.2 RECYCLING BY OCCUPANTS. Where 5 or more multifamily dwelling units are constructed on a building site, provide readily accessible area(s) that serves all buildings on the site and are identified for the depositing, storage and collection of non-hazardous materials for recycling, including (at a minimum) paper, corrugated cardboard, glass, plastics, organic waster, and metals, or meet a lawfully enacted local recycling ordinance, if more restrictive.

Exception: Rural jurisdictions that meet and apply for the exemption in Public Resources Code Section 42649.82 (a)(2)(A) et seq. are note required to comply with the organic waste portion of this section.

DIVISION 4.5 ENVIRONMENTAL QUALITY

SECTION 4.501 GENERAL
4.501.1 Scope
The provisions of this chapter shall outline means of reducing the quality of air contaminants that are odorous, irritating and/or harmful to the comfort and well being of a building's installers, occupants and neighbors.

SECTION 4.502 DEFINITIONS
5.102.1 DEFINITIONS
The following terms are defined in Chapter 2 *(and are included here for reference)*

AGRIFIBER PRODUCTS. Agrifiber products include wheatboard, strawboard, panel substrates and door cores, not including furniture, fixtures and equipment (FF&E) not considered base building elements.

COMPOSITE WOOD PRODUCTS. Composite wood products include hardwood plywood, particleboard and medium density fiberboard. "Composite wood products" does not include hardboard, structural plywood, structural panels, structural composite lumber, oriented strand board, glued laminated timber, prefabricated wood I-joists or finger-jointed lumber, all as specified in California Code of regulations (CCR), title 17, Section 93120.1.

DIRECT-VENT APPLIANCE. A fuel-burning appliance with a sealed combustion system that draws all air for combustion from the outside atmosphere and discharges all flue gases to the outside atmosphere.

DISCLAIMER: *THIS DOCUMENT IS PROVIDED AND INTENDED TO BE USED AS A MEANS TO INDICATE AREAS OF COMPLIANCE WITH THE CALIFORNIA GREEN BUILDING STANDARDS (CALGREEN) CODE. DUE TO THE VARIABLES BETWEEN BUILDING DEPARTMENT JURISDICTIONS, THIS CHECKLIST IS TO BE USED ON AN INDIVIDUAL PROJECT BASIS AND MAY BE MODIFIED BY THE END USER TO MEET THOSE INDIVIDUAL NEEDS. THE END USER ASSUMES ALL RESPONSIBILITY ASSOCIATED WITH THE USE OF THIS DOCUMENT, INCLUDING VERIFICATION WITH THE FULL CODE.*

LICENSED ARCHITECT
CHRISTOPHER SAWAYA
C35763
REN: 06-30-27
STATE OF CALIFORNIA

SAWAYA ARCHITECTURE
3565 7TH AVENUE
SAN DIEGO, CA 92103
SAWAYAARCHITECTURE.COM
(619) 916 - 8145

IDLEWILD
ADUS

3153 IDLEWILD WAY

3153 IDLEWILD WY UNIT 1
3153 IDLEWILD WY UNIT 2
3153 IDLEWILD WY UNIT 3
3153 IDLEWILD WY UNIT 4

SAN DIEGO, CA 92117

DATE	BY	ISSUE DESCRIPTION
03-10-26	CC	SUBMITTAL

SAWAYA ARCHITECTURE

TS3.0
CALGREEN NOTES

2603
PRINT TO SCALE : 24" X 36"

2025 CALIFORNIA GREEN BUILDING STANDARDS CODE
RESIDENTIAL MANDATORY MEASURES, SHEET 2

Y = YES
N/A = NOT APPLICABLE
RESPON. PARTY = RESPONSIBLE PARTY (ie: ARCHITECT, ENGINEER, OWNER, CONTRACTOR, INSPECTOR ETC.)

MAXIMUM INCREMENTAL REACTIVITY (MIR). The maximum change in weight of ozone formed by adding a compound to the "Base Reactive Organic Gas (ROG) Mixture" per weight of compound added, expressed to hundredths of a gram (g O^3/g ROC).
Note: MIR values for individual compounds and hydrocarbon solvents are specified in CCR, Title 17, Sections 94700 and 94701.

MOISTURE CONTENT. The weight of the water in wood expressed in percentage of the weight of the oven-dry wood.

PRODUCT-WEIGHTED MIR (PWMIR). The sum of all weighted-MIR for all ingredients in a product subject to this article. The PWMIR is the total product reactivity expressed to hundredths of a gram of ozone formed per gram of product (excluding container and packaging).
Note: PWMIR is calculated according to equations found in CCR, Title 17, Section 94521 (a).

REACTIVE ORGANIC COMPOUND (ROC). Any compound that has the potential, once emitted, to contribute to ozone formation in the troposphere.

VOC. A volatile organic compound (VOC) broadly defined as a chemical compound based on carbon chains or rings with vapor pressures greater than 0.1 millimeters of mercury at room temperature. These compounds typically contain hydrogen and may contain oxygen, nitrogen and other elements. See CCR Title 17, Section 94508(a).

4.503 FIREPLACES
4.503.1 GENERAL. Any installed gas fireplace shall be a direct-vent sealed-combustion type. Any installed woodstove or pellet stove shall comply with U.S. EPA New Source Performance Standards (NSPS) emission limits as applicable, and shall have a permanent label indicating they are certified to meet the emission limits. Woodstoves, pellet stoves and fireplaces shall also comply with applicable local ordinances.

4.504 POLLUTANT CONTROL
4.504.1 COVERING OF DUCT OPENINGS & PROTECTION OF MECHANICAL EQUIPMENT DURING CONSTRUCTION. At the time of rough installation, during storage on the construction site and until final startup of the heating, cooling and ventilating equipment, all duct and other related air distribution component openings shall be covered with tape, plastic, sheet metal or other methods acceptable to the enforcing agency to reduce the amount of water, dust or debris which may enter the system.

4.504.2 FINISH MATERIAL POLLUTANT CONTROL. Finish materials shall comply with this section.

4.504.2.1 Adhesives, Sealants and Caulks. Adhesives, sealant and caulks used on the project shall meet the requirements of the following standards unless more stringent local or regional air pollution or air quality management district rules apply:

1. Adhesives, adhesive bonding primers, adhesive primers, sealants, sealant primers and caulks shall comply with local or regional air pollution control or air quality management district rules where applicable or SCAQMD Rule 1168 VOC limits, as shown in Table 4.504.1 or 4.504.2, as applicable. Such products also shall comply with the Rule 1168 prohibition on the use of certain toxic compounds (chloroform, ethylene dichloride, methylene chloride, perchloroethylene and trichloroethylene), except for aerosol products, as specified in Subsection 2 below.
2. Aerosol adhesives, and smaller unit sizes of adhesives, and sealant or caulking compounds (in units of product, less packaging, which do not weigh more than 1 pound and do not consist of more than 16 fluid ounces) shall comply with statewide VOC standards and other requirements, including prohibitions on use of certain toxic compounds, of *California Code of Regulations*, Title 17, commencing with section 94507.

4.504.2.2 Paints and Coatings. Architectural paints and coatings shall comply with VOC limits in Table 1 of the ARB Architectural Suggested Control Measure, as shown in Table 4.504.3, unless more stringent local limits apply. The VOC content limit for coatings that do not meet the definitions for the specialty coatings categories listed in Table 4.504.3 shall be determined by classifying the coating as a Flat, Nonflat or Nonflat-High Gloss coating, based on its gloss, as defined in subsections 4.21, 4.36, and 4.37 of the 2007 California Air Resources Board, Suggested Control Measure, and the corresponding Flat, Nonflat or Nonflat-High Gloss VOC limit in Table 4.504.3 shall apply.

4.504.2.3 Aerosol Paints and Coatings. Aerosol paints and coatings shall meet the Product-weighted MIR Limits for ROC in Section 94522(a)(2) and other requirements, including prohibitions on use of certain toxic compounds and ozone depleting substances, in Sections 94522(e)(1) and (f)(1) of *California Code of Regulations*, Title 17, commencing with Section 94520, and in areas under the jurisdiction of the Bay Area Air Quality Management District additionally comply with the percent VOC by weight of product limits of Regulation 8, Rule 49.

4.504.2.4 Verification. Verification of compliance with this section shall be provided at the request of the enforcing agency. Documentation may include, but is not limited to, the following:

1. Manufacturer's product specification.
2. Field verification of on-site product containers.

TABLE 4.504.1 - ADHESIVE VOC LIMIT[1,2]

(Less Water and Less Exempt Compounds in Grams per Liter)

ARCHITECTURAL APPLICATIONS	VOC LIMIT
INDOOR CARPET ADHESIVES	50
CARPET PAD ADHESIVES	50
OUTDOOR CARPET ADHESIVES	150
WOOD FLOORING ADHESIVES	100
RUBBER FLOOR ADHESIVES	60
SUBFLOOR ADHESIVES	50
CERAMIC TILE ADHESIVES	65
VCT & ASPHALT TILE ADHESIVES	50
DRYWALL & PANEL ADHESIVES	50
COVE BASE ADHESIVES	50
MULTIPURPOSE CONSTRUCTION ADHESIVE	70
STRUCTURAL GLAZING ADHESIVES	100
SINGLE-PLY ROOF MEMBRANE ADHESIVES	250
OTHER ADHESIVES NOT LISTED	50
SPECIALTY APPLICATIONS	
PVC WELDING	510
CPVC WELDING	490
ABS WELDING	325
PLASTIC CEMENT WELDING	250
ADHESIVE PRIMER FOR PLASTIC	550
CONTACT ADHESIVE	80
SPECIAL PURPOSE CONTACT ADHESIVE	250
STRUCTURAL WOOD MEMBER ADHESIVE	140
TOP & TRIM ADHESIVE	250
SUBSTRATE SPECIFIC APPLICATIONS	
METAL TO METAL	30
PLASTIC FOAMS	50
POROUS MATERIAL (EXCEPT WOOD)	50
WOOD	30
FIBERGLASS	80

1. IF AN ADHESIVE IS USED TO BOND DISSIMILAR SUBSTRATES TOGETHER, THE ADHESIVE WITH THE HIGHEST VOC CONTENT SHALL BE ALLOWED.

2. FOR ADDITIONAL INFORMATION REGARDING METHODS TO MEASURE THE VOC CONTENT SPECIFIED IN THIS TABLE, SEE SOUTH COAST AIR QUALITY MANAGEMENT DISTRICT RULE 1168.

TABLE 4.504.2 - SEALANT VOC LIMIT

(Less Water and Less Exempt Compounds in Grams per Liter)

SEALANTS	VOC LIMIT
ARCHITECTURAL	250
MARINE DECK	760
NONMEMBRANE ROOF	300
ROADWAY	250
SINGLE-PLY ROOF MEMBRANE	450
OTHER	420
SEALANT PRIMERS	
ARCHITECTURAL	
NON-POROUS	250
POROUS	775
MODIFIED BITUMINOUS	500
MARINE DECK	760
OTHER	750

TABLE 4.504.3 - VOC CONTENT LIMITS FOR ARCHITECTURAL COATINGS[1,2,3]

GRAMS OF VOC PER LITER OF COATING, LESS WATER & LESS EXEMPT COMPOUNDS

COATING CATEGORY	VOC LIMIT
FLAT COATINGS	50
NON-FLAT COATINGS	100
NONFLAT-HIGH GLOSS COATINGS	150
SPECIALTY COATINGS	
ALUMINUM ROOF COATINGS	400
BASEMENT SPECIALTY COATINGS	400
BITUMINOUS ROOF COATINGS	50
BITUMINOUS ROOF PRIMERS	350
BOND BREAKERS	350
CONCRETE CURING COMPOUNDS	350
CONCRETE/MASONRY SEALERS	100
DRIVEWAY SEALERS	50
DRY FOG COATINGS	150
FAUX FINISHING COATINGS	350
FIRE RESISTIVE COATINGS	350
FLOOR COATINGS	100
FORM-RELEASE COMPOUNDS	250
GRAPHIC ARTS COATINGS (SIGN PAINTS)	500
HIGH TEMPERATURE COATINGS	420
INDUSTRIAL MAINTENANCE COATINGS	250
LOW SOLIDS COATINGS[1]	120
MAGNESITE CEMENT COATINGS	450
MASTIC TEXTURE COATINGS	100
METALLIC PIGMENTED COATINGS	500
MULTICOLOR COATINGS	250
PRETREATMENT WASH PRIMERS	420
PRIMERS, SEALERS, & UNDERCOATERS	100
REACTIVE PENETRATING SEALERS	350
RECYCLED COATINGS	250
ROOF COATINGS	50
RUST PREVENTATIVE COATINGS	250
SHELLACS	
CLEAR	730
OPAQUE	550
SPECIALTY PRIMERS, SEALERS & UNDERCOATERS	100
STAINS	250
STONE CONSOLIDANTS	450
SWIMMING POOL COATINGS	340
TRAFFIC MARKING COATINGS	100
TUB & TILE REFINISH COATINGS	420
WATERPROOFING MEMBRANES	250
WOOD COATINGS	275
WOOD PRESERVATIVES	350
ZINC-RICH PRIMERS	340

1. GRAMS OF VOC PER LITER OF COATING, INCLUDING WATER & EXEMPT COMPOUNDS

2. THE SPECIFIED LIMITS REMAIN IN EFFECT UNLESS REVISED LIMITS ARE LISTED IN SUBSEQUENT COLUMNS IN THE TABLE.

3. VALUES IN THIS TABLE ARE DERIVED FROM THOSE SPECIFIED BY THE CALIFORNIA AIR RESOURCES BOARD, ARCHITECTURAL COATINGS SUGGESTED CONTROL MEASURE, FEB. 1, 2008. MORE INFORMATION IS AVAILABLE FROM THE AIR RESOURCES BOARD.

TABLE 4.504.5 - FORMALDEHYDE LIMITS[1]

MAXIMUM FORMALDEHYDE EMISSIONS IN PARTS PER MILLION

PRODUCT	CURRENT LIMIT
HARDWOOD PLYWOOD VENEER CORE	0.05
HARDWOOD PLYWOOD COMPOSITE CORE	0.05
PARTICLE BOARD	0.09
MEDIUM DENSITY FIBERBOARD	0.11
THIN MEDIUM DENSITY FIBERBOARD[2]	0.13

1. VALUES IN THIS TABLE ARE DERIVED FROM THOSE SPECIFIED BY THE CALIF. AIR RESOURCES BOARD, AIR TOXICS CONTROL MEASURE FOR COMPOSITE WOOD AS TESTED IN ACCORDANCE WITH ASTM E 1333. FOR ADDITIONAL INFORMATION, SEE CALIF. CODE OF REGULATIONS, TITLE 17, SECTIONS 93120 THROUGH 93120.12.

2. THIN MEDIUM DENSITY FIBERBOARD HAS A MAXIMUM THICKNESS OF 5/16" (8 MM).

DIVISION 4.5 ENVIRONMENTAL QUALITY (continued)
4.504.3 CARPET SYSTEMS. All carpet installed in the building interior shall meet the requirements of the California Department of Public Health, "Standard Method for the Testing and Evaluation of Volatile Organic Chemical Emissions from Indoor Sources Using Environmental Chambers," Version 1.2, January 2017 (Emission testing method for California Specification 01350)

See California Department of Public Health's website for certification programs and testing labs.

https://www.cdph.ca.gov/Programs/CCDPHP/DEODC/EHLB/IAQ/Pages/VOC.aspx.

4.504.3.1 Carpet cushion. All carpet cushion installed in the building interior shall meet the requirements of the California Department of Public Health, "Standard Method for the Testing and Evaluation of Volatile Organic Chemical Emissions from Indoor Sources Using Environmental Chambers," Version 1.2, January 2017 (Emission testing method for California Specification 01350)

See California Department of Public Health's website for certification programs and testing labs.

https://www.cdph.ca.gov/Programs/CCDPHP/DEODC/EHLB/IAQ/Pages/VOC.aspx.

4.504.3.2 Carpet adhesive. All carpet adhesive shall meet the requirements of Table 4.504.1.

4.504.4 RESILIENT FLOORING SYSTEMS. Where resilient flooring is installed , at least 80% of floor area receiving resilient flooring shall meet the requirements of the California Department of Public Health, "Standard Method for the Testing and Evaluation of Volatile Organic Chemical Emissions from Indoor Sources Using Environmental Chambers," Version 1.2, January 2017 (Emission testing method for California Specification 01350)

See California Department of Public Health's website for certification programs and testing labs.

hhttps://www.cdph.ca.gov/Programs/CCDPHP/DEODC/EHLB/IAQ/Pages/VOC.aspx.

4.504.5 COMPOSITE WOOD PRODUCTS. Hardwood plywood, particleboard and medium density fiberboard composite wood products used on the interior or exterior of the buildings shall meet the requirements for formaldehyde as specified in ARB's Air Toxics Control Measure for Composite Wood (17 CCR 93120 et seq.), by or before the dates specified in those sections, as shown in Table 4.504.5

4.504.5.1 Documentation. Verification of compliance with this section shall be provided as requested by the enforcing agency. Documentation shall include at least one of the following:

1. Product certifications and specifications.
2. Chain of custody certifications.
3. Product labeled and invoiced as meeting the Composite Wood Products regulation (see CCR, Title 17, Section 93120, et seq.).
4. Exterior grade products marked as meeting the PS-1 or PS-2 standards of the Engineered Wood Association, the Australian AS/NZS 2269, European 636 3S standards, and Canadian CSA 0121, CSA 0151, CSA 0153 and CSA 0325 standards.
5. Other methods acceptable to the enforcing agency.

4.505 INTERIOR MOISTURE CONTROL
4.505.1 General. Buildings shall meet or exceed the provisions of the *California Building Standards Code*.

4.505.2 CONCRETE SLAB FOUNDATIONS. Concrete slab foundations required to have a vapor retarder by California Building Code, Chapter 19, or concrete slab-on-ground floors required to have a vapor retarder by the California Residential Code, Chapter 5, shall also comply with this section.

4.505.2.1 Capillary break. A capillary break shall be installed in compliance with at least one of the following:

1. A 4-inch (101.6 mm) thick base of 1/2 inch (12.7mm) or larger clean aggregate shall be provided with a vapor barrier in direct contact with concrete and a concrete mix design, which will address bleeding, shrinkage, and curling, shall be used. For additional information, see American Concrete Institute, ACI 302.2R-06.
2. Other equivalent methods approved by the enforcing agency.
3. A slab design specified by a licensed design professional.

4.505.3 MOISTURE CONTENT OF BUILDING MATERIALS. Building materials with visible signs of water damage shall not be installed. Wall and floor framing shall not be enclosed when the framing members exceed 19 percent moisture content. Moisture content shall be verified in compliance with the following:

1. Moisture content shall be determined with either a probe-type or contact-type moisture meter.Equivalent moisture verification methods may be approved by the enforcing agency and shall satisfy requirements found in Section 101.8 of this code.
2. Moisture readings shall be taken at a point 2 feet (610 mm) to 4 feet (1219 mm) from the grade stamped end of each piece verified.
3. At least three random moisture readings shall be performed on wall and floor framing with documentation acceptable to the enforcing agency provided at the time of approval to enclose the wall and floor framing.

Insulation products which are visibly wet or have a high moisture content shall be replaced or allowed to dry prior to enclosure in wall or floor cavities. Wet-applied insulation products shall follow the manufacturers' drying recommendations prior to enclosure.

4.506 INDOOR AIR QUALITY AND EXHAUST
4.506.1 Bathroom exhaust fans. Each bathroom shall be mechanically ventilated and shall comply with the following:

1. Fans shall be ENERGY STAR compliant and be ducted to terminate outside the building.
2. Unless functioning as a component of a whole house ventilation system, fans must be controlled by a humidity control.
   a. Humidity controls shall be capable of adjustment between a relative humidity range less than or equal to 50% to a maximum of 80%. A humidity control may utilize manual or automatic means of adjustment.
   b. A humidity control may be a separate component to the exhaust fan and is not required to be integral (i.e., built-in)

Notes:

1. For the purposes of this section, a bathroom is a room which contains a bathtub, shower or tub/shower combination.
2. Lighting integral to bathroom exhaust fans shall comply with the *California Energy Code*.

4.507 ENVIRONMENTAL COMFORT
4.507.2 HEATING AND AIR-CONDITIONING SYSTEM DESIGN. Heating and air conditioning systems shall be sized, designed and have their equipment selected using the following methods:

1. The heat loss and heat gain is established according to ANSI/ACCA 2 Manual J - 2011 (Residential Load Calculation), ASHRAE handbooks or other equivalent design software or methods.
2. Duct systems are sized according to ANSI/ACCA 1 Manual D - 2014 (Residential Duct Systems), ASHRAE handbooks or other equivalent design software or methods.
3. Select heating and cooling equipment according to ANSI/ACCA 3 Manual S - 2014 (Residential Equipment Selection), or other equivalent design software or methods.

Exception: Use of alternate design temperatures necessary to ensure the system functions are acceptable.

CHAPTER 7
INSTALLER & SPECIAL INSPECTOR QUALIFICATIONS

702 QUALIFICATIONS
702.1 INSTALLER TRAINING. HVAC system installers shall be trained and certified in the proper installation of HVAC systems including ducts and equipment by a nationally or regionally recognized training or certification program. Uncertified persons may perform HVAC installations when under the direct supervision and responsibility of a person trained and certified to install HVAC systems or contractor licensed to install HVAC systems. Examples of acceptable HVAC training and certification programs include but are not limited to the following:

1. State certified apprenticeship programs.
2. Public utility training programs.
3. Training programs sponsored by trade, labor or statewide energy consulting or verification organizations.
4. Programs sponsored by manufacturing organizations.
5. Other programs acceptable to the enforcing agency.

702.2 SPECIAL INSPECTION [HCD]. When required by the enforcing agency, the owner or the responsible entity acting as the owner's agent shall employ one or more special inspectors to provide inspection or other duties necessary to substantiate compliance with this code. Special inspectors shall demonstrate competence to the satisfaction of the enforcing agency for the particular type of inspection or task to be performed. In addition to other certifications or qualifications acceptable to the enforcing agency, the following certifications or education may be considered by the enforcing agency when evaluating the qualifications of a special inspector:

1. Certification by a national or regional green building program or standard publisher.
2. Certification by a statewide energy consulting or verification organization, such as HERS raters, building performance contractors, and home energy auditors.
3. Successful completion of a third party apprentice training program in the appropriate trade.
4. Other programs acceptable to the enforcing agency.

Notes:

1. Special inspectors shall be independent entities with no financial interest in the materials or the project they are inspecting for compliance with this code.
2. HERS raters are special inspectors certified by the California Energy Commission (CEC) to rate homes in California according to the Home Energy Rating System (HERS).

[BSC] When required by the enforcing agency, the owner or the responsible entity acting as the owner's agent shall employ one or more special inspectors to provide inspection or other duties necessary to substantiate compliance with this code. Special inspectors shall demonstrate competence to the satisfaction of the enforcing agency for the particular type of inspection or task to be performed. In addition, the special inspector shall have a certification from a recognized state, national or international association, as determined by the local agency. The area of certification shall be closely related to the primary job function, as determined by the local agency.

Note: Special inspectors shall be independent entities with no financial interest in the materials or the project they are inspecting for compliance with this code.

703 VERIFICATIONS
703.1 DOCUMENTATION. Documentation used to show compliance with this code shall include but is not limited to, construction documents, plans, specifications, builder or installer certification, inspection reports, or other methods acceptable to the enforcing agency which demonstrate substantial conformance. When specific documentation or special inspection is necessary to verify compliance, that method of compliance will be specified in the appropriate section or identified applicable checklist.

DISCLAIMER: *THIS DOCUMENT IS PROVIDED AND INTENDED TO BE USED AS A MEANS TO INDICATE AREAS OF COMPLIANCE WITH THE CALIFORNIA GREEN BUILDING STANDARDS (CALGREEN) CODE. DUE TO THE VARIABLES BETWEEN BUILDING DEPARTMENT JURISDICTIONS, THIS CHECKLIST IS TO BE USED ON AN INDIVIDUAL PROJECT BASIS AND MAY BE MODIFIED BY THE END USER TO MEET THOSE INDIVIDUAL NEEDS. THE END USER ASSUMES ALL RESPONSIBILITY ASSOCIATED WITH THE USE OF THIS DOCUMENT, INCLUDING VERIFICATION WITH THE FULL CODE.*

LICENSED ARCHITECT
CHRISTOPHER SAWAYA
C35763
REN: 06-30-27
STATE OF CALIFORNIA

SAWAYA ARCHITECTURE
3565 7TH AVENUE
SAN DIEGO, CA 92103
SAWAYAARCHITECTURE.COM
(619) 916 - 8145

IDLEWILD
ADUS

3153 IDLEWILD WAY

3153 IDLEWILD WY UNIT 1
3153 IDLEWILD WY UNIT 2
3153 IDLEWILD WY UNIT 3
3153 IDLEWILD WY UNIT 4

SAN DIEGO, CA 92117

DATE	BY	ISSUE DESCRIPTION
03-10-26	CC	SUBMITTAL

SAWAYA ARCHITECTURE

TS3.1
CALGREEN NOTES

2603
PRINT TO SCALE : 24" X 36"

LEGEND

AC --- ASPHALT CONCRETE
BW --- BOTTOM OF WALL
EG --- EXISTING GROUND
EP --- EDGE OF PAVEMENT
FF --- FINISH FLOOR
FH --- FIRE HYDRANT
FL --- FLOW LINE
FS --- FINISH SURFACE
GM --- GAS METER
PP --- POWER POLE
SMH --- SEWER MANHOLE
TC --- TOP OF CURB
WM --- WATER METER

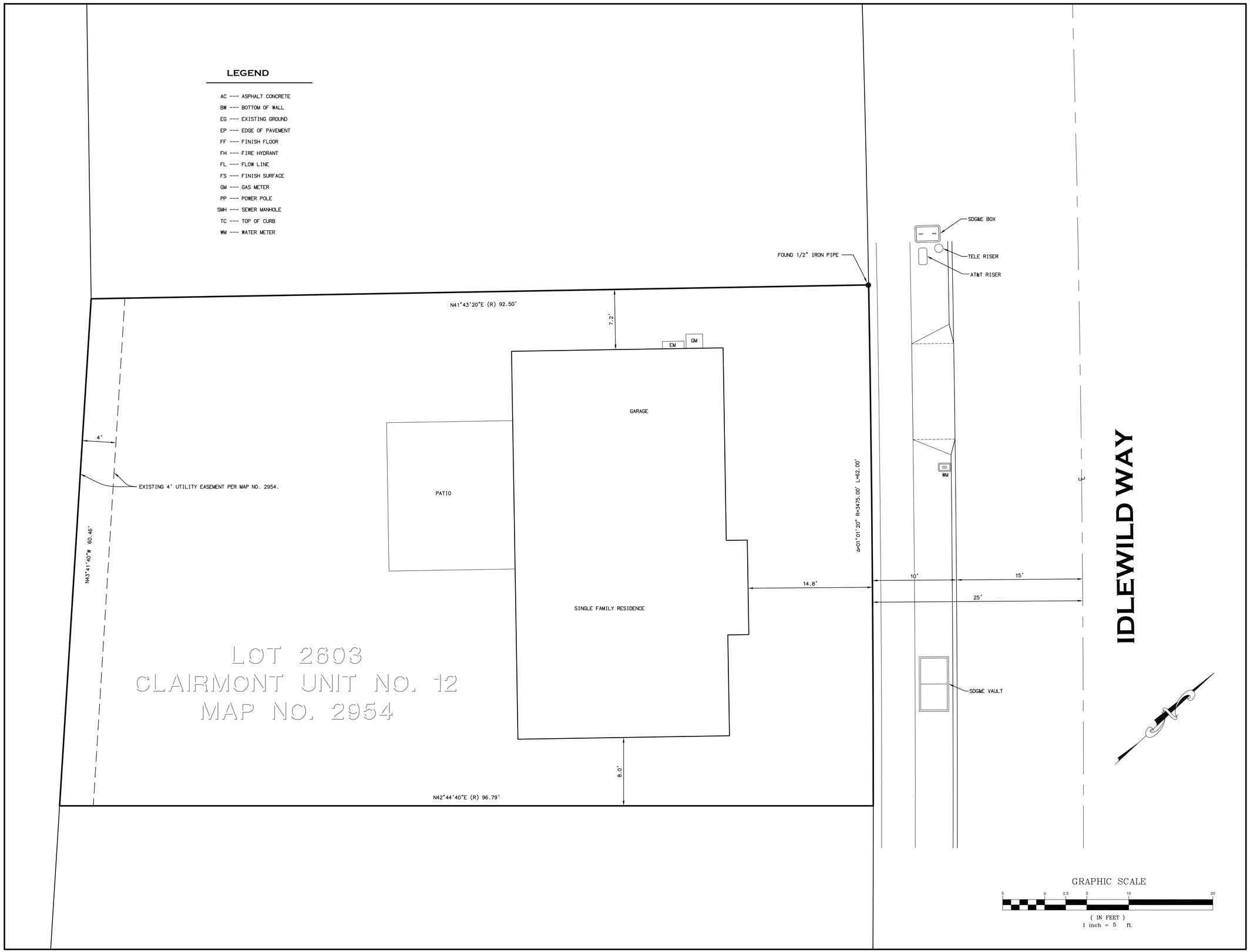

VICINTY MAP

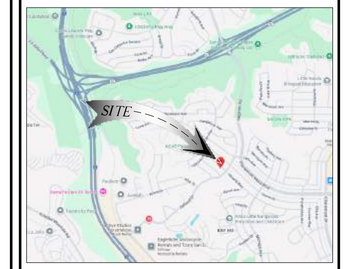

SITE INFORMATION

3153 IDLEWILD WAY SAN DIEGO, CA 92117

LEGAL DESCRIPTION

LOT 2603 OF CLAIRMONT, UNIT NO. 12, IN THE CITY OF SAN DIEGO, COUNTY OF SAN DIEGO, STATE OF CALIFORNIA, ACCORDING TO MAP THEREOF NO. 2954, FILED IN THE OFFICE OF THE COUNTY RECORDER OF SAN DIEGO COUNTY, FEBRUARY 16, 1953, BEING DESCRIBED IN DOCUMENT NO. 2010-0495951, RECORDED SEPTEMBER 20, 2010.

APN: 359-172-06
GROSS AREA - 0.131 ACRES
5,793.45 SQ. FT.

THE PROPERTY LINES, BEARINGS AND DIMENSIONS, SHOWN HEREON, ARE ESTABLISHED FROM AVAILABLE RECORD INFORMATION AND ARE SUBJECT TO VERIFICATION BY A COMPLETE FIELD BOUNDARY RETRACEMENT SURVEY.

PLAN PREPARED BY

ACCURATE LAND SURVEYS
2514 ALPINE BLVD, SUITE #4, ALPINE, CA 91901
PH. 619-445-0110

SEAL

PROFESSIONAL LAND SURVEYOR
ROBERT J. RUSSELL
EXP. MAR 31 27
NO. 8211
STATE OF CALIFORNIA

SHEET TITLE

SITE PLAN

DATE

10/09/2025

SHEET NUMBER

C1

JOB NO. 254633 IDLEWILD WAY

PLAN CHECK NOTES

1. LIGHTING IN BATHROOMS SHALL HAVE ONE HIGH EFFICACY LUMINAIRE AND ALL LOW EFFICACY LIGHTING MUST BE CONTROLLED BY VACANCY SENSORS.
2. ALL PLUMBING FIXTURES AND FITTINGS WILL BE WATER CONSERVING.
3. PER 2019 CGBSC SEC 4.303.2, PLUMBING FIXTURES (WATER CLOSETS AND URINALS) AND FITTINGS (FAUCETS AND SHOWERHEADS) SHALL BE INSTALLED IN ACCORDANCE WITH THE CALIFORNIA PLUMBING CODE (CPC) AND TABLE 1401.1 OF THE CPC.
4. DUCTS IN THE GARAGE AND DUCTS PENETRATING THE WALLS OR CEILINGS SEPARATING THE DWELLING FROM THE GARAGE SHALL BE CONSTRUCTED OF MIN. NO. 26 GAUGE SHEET STEEL OR OTHER APPROVED MATERIAL AND SHALL HAVE NO OPENINGS INTO THE GARAGE.
5. LOCATIONS AND CLASSIFICATIONS OF EXTINGUISHERS SHALL BE IN ACCORDANCE WITH THE CFC 906 AND THE CALIFORNIA CODE OF REGULATIONS (CCR), TITLE 19.
6. THE EGRESS PATH SHALL REMAIN FREE AND CLEAR OF ALL OBSTRUCTIONS AT ALL TIMES. NO STORAGE IS PERMITTED IN ANY EGRESS PATHS.
7. PROVIDE LAVATORY FAUCETS WITH A MAXIMUM FLOW OF 1.2 GALLONS PER MINUTE (GPM).
8. PROVIDE SHOWER HEADS WITH A MAXIMUM FLOW OF 1.8 GALLONS PER MINUTE (GPM).
9. PROVIDE WATER CLOSETS WITH A MAXIMUM FLOW OF 1.28 GALLONS PER FLUSH (GPF).
10. PER 2019 GREEN CODE, MECHANICAL EXHAUST FANS WHICH EXHAUST DIRECTLY FROM BATHROOMS SHALL COMPLY WITH THE FOLLOWING:
    1. FANS SHALL BE ENERGY STAR COMPLIANT AND BE DUCTED TO TERMINATE OUTSIDE THE BUILDING.
    2. UNLESS FUNCTIONING AS A COMPONENT OF A WHOLE HOUSE VENTILATION SYSTEM, FANS MUST BE CONTROLLED BY A HUMIDISTAT WHICH SHALL BE READILY ACCESSIBLE. HUMIDISTAT CONTROLS SHALL BE CAPABLE OF ADJUSTMENT BETWEEN A RELATIVE HUMIDITY RANGE OF 50 TO 80 PERCENT.
11. KITCHENS: ALL THE INSTALLED WATTAGES OF LUMINAIRES IN KITCHENS SHALL BE HIGH EFFICACY AND SHALL HAVE A MANUAL ON/OFF IN ADDITION TO A VACANCY SENSOR OR DIMMER. UNDER CABINET LIGHTING SHALL BE SWITCHED SEPARATELY.
12. OTHER ROOMS: ALL LUMINAIRES SHALL BE HIGH EFFICACY AND SHALL HAVE A MANUAL ON/OFF IN ADDITION TO VACANCY SENSOR OR DIMMER.
13. OUTDOOR LIGHTING: ALL LUMINAIRES MOUNTED TO THE BUILDING OR TO THE OTHER BUILDINGS ON THE SAME LOT SHALL BE HIGH EFFICACY LUMINAIRES AND MUST BE CONTROLLED BY A MANUAL ON/OFF SWITCH, AND CONTROLLED BY ONE OF THESE AUTOMATIC CONTROL TYPES: PHOTOCONTROL AND A MOTION SENSOR, OR ASTRONOMICAL TIME CLOCK, OR ENERGY MANAGEMENT CONTROL SYSTEM.
14. PROVIDE KITCHEN FAUCETS WITH A MAXIMUM FLOW OF 1.8 GALLONS PER MINUTE.
15. ATTIC/UNDERFLOOR INSTALLATION MUST COMPLY WITH SECTIONS 904, 908, AND 909 OF THE CMC.
16. LIGHTING IN BATHROOMS SHALL HAVE ALL HIGH EFFICACY LUMINAIRE AND AT LEAST ONE LUMINAIRE MUST BE CONTROLLED BY A VACANCY SENSOR.
17. LIGHTING IN GARAGES, LAUNDRY ROOMS, AND UTILITY ROOMS: ALL LUMINAIRES SHALL BE HIGH EFFICACY AND AT LEAST ONE LUMINAIRE IN EACH OF THESE SPACES SHALL BE CONTROLLED BY A VACANCY SENSOR.
18. PERMANENT VACUUM BREAKERS SHALL BE INCLUDED WITH ALL NEW HOSE BIBBS.
19. EXHAUST DUCTS AND DRYER VENTS SHALL BE EQUIPPED WITH BACK-DRAFT DAMPERS.
20. SHOWER COMPARTMENTS AND BATHTUBS WITH INSTALLED SHOWERHEADS SHALL BE FINISHED WITH A NONABSORBENT SURFACE THAT EXTENDS TO A HEIGHT OF NOT LESS THAN 6' ABOVE FLOOR.
21. ALL STORM WATER RUNOFF FROM PROPOSED AND/OR REPLACED IMPERVIOUS AREAS SHALL BE ROUTED TO PERVIOUS SURFACES OR LANDSCAPING PRIOR TO REACHING THE PUBLIC DRAIN SYSTEM.
22. THE STRUCTURE(S) WILL BE LOCATED ENTIRELY ON UNDISTURBED NATIVE SOIL.
    ARCHITECT SIGNATURE _____
23. IF THE BUILDING INSPECTOR SUSPECTS FILL, EXPANSIVE SOILS OR ANY GEOLOGIC INSTABILITY BASED UPON OBSERVATION OF THE FOUNDATION EXCAVATION, A SOILS OR GEOLOGICAL REPORT, AND RESUBMITTAL OF PLANS TO PLAN CHECK TO VERIFY THAT REPORT RECOMMENDATIONS HAVE BEEN INCORPORATED, MAY BE REQUIRED.
24. BACKWATER VALVE SHALL BE INSTALLED ON THE DOWNSTREAM OF PLUMBING FIXTURES THAT ARE LOCATED ON A FLOOR LEVEL THAT IS LOWER THAN THE NEXT UPSTREAM MANHOLE COVER OF THE PUBLIC OR PRIVATE SEWER SYSTEM PER SECTION 701.1 CPC AND SUBJECT TO FIELD INSPECTION APPROVAL.
25. SITE PLAN ACCURATELY DISPLAYS ALL POTENTIAL EASEMENT AND PUBLIC ROW ENCROACHMENTS RELATED TO THIS PROJECT.
26. ALL STORM WATER RUNOFF FROM PROPOSED AND/OR REPLACED IMPERVIOUS AREAS SHALL BE ROUTED TO PERVIOUS SURFACES OR LANDSCAPING PRIOR TO REACHING THE PUBLIC DRAIN SYSTEM.
27. PER CITY OF SAN DIEGO MUNICIPAL CODE SECTIONS 12.0104, 43.0310, 129.0104(A)(4), AND 142.0220, PERMITS ARE REQUIRED TO BE INSPECTED BY CITY INSPECTION STAFF TO ENSURE COMPLIANCE WITH ISSUED CONSTRUCTION PERMIT. THIS INCLUDES, BUT IS NOT LIMITED TO, STORM WATER COMPLIANCE INSPECTION REQUIREMENTS ASSOCIATED WITH EACH PERMIT.

ENGINEERING NOTES

1. CUT QUANTITIES: 0 CUYD
   FILL QUANTITIES: 0 CUYD
   IMPORT/EXPORT: 0 CUYD EXPORT
   MAX CUT DEPTH: 2 FT
   MAX FILL DEPTH: 0 FT
2. TOTAL DISTURBANCE AREA: 1194 SF
3. EXISTING AMOUNT OF IMPERVIOUS AREA: 1426 SF
   PROPOSED AMOUNT OF "CREATED" IMPERVIOUS AREA: 2065 SF
   PROPOSED AMOUNT OF "REPLACED" IMPERVIOUS AREA: 1194 SF
   TOTAL IMPERVIOUS AREA: 2620 SF
4. THE PROJECT PROPOSES TO EXPORT 0 CUBIC YARDS OF MATERIAL FROM THIS SITE. ALL EXPORT MATERIAL SHALL BE DISCHARGED TO A LEGAL DISPOSAL SITE IN ACCORDANCE WITH THE 2021 GREENBOOK AND SUPPLEMENTAL AMENDMENTS. THE APPROVAL OF THIS PROJECT DOES NOT ALLOW PROCESSING AND SALE OF THE MATERIAL. ALL SUCH ACTIVITIES REQUIRE A SEPARATE CONDITIONAL USE PERMIT.

VERY HIGH FIRE SEVERITY ZONE NOTES

1. ALL EXPOSED WOOD TO BE FIRE RETARDANT TREATED WOOD, OR ENCLOSED WITH STUCCO
2. ALL WINDOWS ARE BE DUAL PANE, WITH ONE PANE MINIMUM TEMPERED
3. ALL WINDOWS NONCOMBUSTIBLE (VINYL)
4. ALL WALLS COVERED WITH NONCOMBUSTIBLE MATERIAL (STUCCO OR CEMENT FIBER SIDING)
5. ALL VENTS MUST BE NONCOMBUSTIBLE, CORROSION RESISTANT, AND COVERED WITH A MESH WITH OPENING DIMENSIONS BETWEEN 1/16" AND 1/8"
6. THE UNDERSIDE OF THE STAIRS AND LANDINGS ARE ENCLOSED IN NONCOMBUSTIBLE FINISH (STUCCO)
7. STAIR AND LANDING SURFACES FINISHES ARE NONCOMBUSTIBLE (DEXOTEX)

DEFERRED SUBMITTALS

1. NFPA13D FIRE SPRINKLER SYSTEM
2. PLANS FOR THE DEFERRED SUBMITTAL ITEMS SHALL BE SUBMITTED IN A TIMELY MANNER BUT NOT LESS THAN 30 BUSINESS DAYS PRIOR TO INSTALLATION FOR CITY REVIEW AND APPROVAL.
3. THE DEFERRED SUBMITTAL ITEMS SHALL NOT BE INSTALLED UNTIL THEIR DESIGN AND SUBMITTAL DOCUMENTS HAVE BEEN APPROVED BY THE BUILDING OFFICIAL.
4. THE REGISTERED AND RESPONSIBLE DESIGN PROFESSIONAL SHALL REVIEW THE DEFERRED SUBMITTAL DOCUMENTS AND SUBMIT THEM TO THE BUILDING OFFICIAL, WITH ANNOTATION INDICATING THAT THE DEFERRED SUBMITTAL DOCUMENTS HAVE BEEN REVIEWED AND FOUND TO BE N GENERAL CONFORMANCE TO THE DESIGN OF THE BUILDING.

FIRE NOTES

1. BUILDINGS UNDERGOING CONSTRUCTION, ALTERATION, OR DEMOLITION SHALL BE IN ACCORDANCE WITH CFC CHAPTER 14.
2. ADDRESSES SHALL BE PROVIDED FOR ALL NEW AND EXISTING BUILDINGS IN A POSITION AS TO BE PLAINLY VISIBLE AND LEGIBLE FROM THE STREET OR ROAD FRONTING THE PROPERTY. (CFC 901.4.4) PER FHPS POLICY P-00-6.
3. DECORATIVE MATERIALS SHALL BE MAINTAINED IN A FLAME-RETARDANT CONDITION.
4. A DETECTOR SHALL BE INSTALLED IN EACH SLEEPING ROOM AND AT A POINT CENTRALLY LOCATED IN THE CORRIDOR OR AREA GIVING ACCESS TO EACH SLEEPING AREA. WHEN THE DWELLING UNIT HAS MORE THAN ONE STORY AND IN DWELLINGS WITH BASEMENTS, A DETECTOR SHALL BE INSTALLED ON EACH STORY AND IN THE BASEMENT. WHEN SLEEPING ROOMS ARE ON AN UPPER LEVEL, THE DETECTOR SHALL BE PLACED AT THE CEILING OF THE UPPER LEVEL IN CLOSE PROXIMITY TO THE STAIRWAY. IN DWELLING UNITS WHERE THE CEILING HEIGHT OF A ROOM OPEN TO THE HALLWAY EXCEEDS THAT OF THE HALLWAY BY 24 INCHES, SMOKE DETECTORS SHALL BE INSTALLED IN THE HALLWAY AND IN THE ADJACENT AREA.

FAA SELF CERTIFICATION

I, _____, DO HEREBY CERTIFY THAT THE STRUCTURE(S) OR MODIFICATION TO EXISTING STRUCTURE(S) SHOWN ON THESE PLANS DO NOT REQUIRE FEDERAL AVIATION ADMINISTRATION NOTIFICATION BECAUSE PER SECTION 77.15 (A) OF TITLE 14 OF THE CODE OF FEDERAL REGULATIONS CFR PART 77, NOTIFICATION IS NOT REQUIRED.

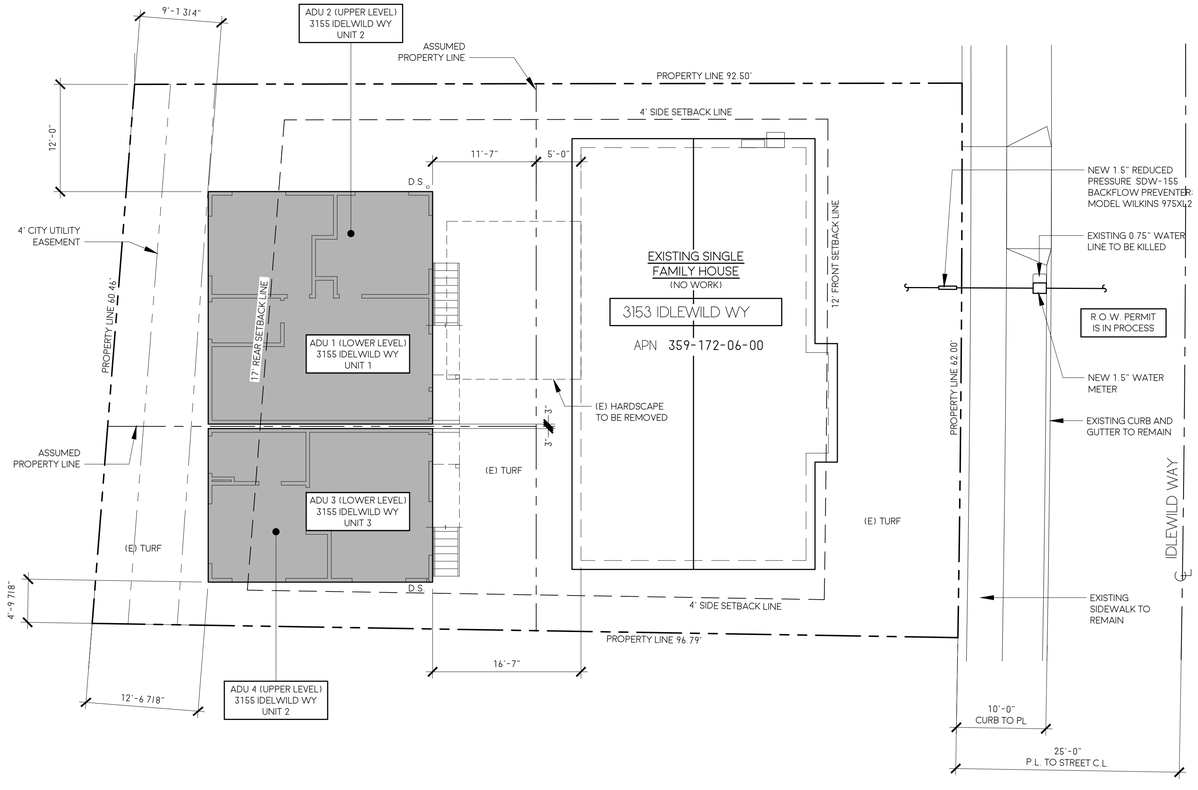

SITE PLAN | 1

1/8"=1'-0"

NORTH

LICENSED ARCHITECT
CHRISTOPHER SAWAYA
C36363
REN. 06-30-27
STATE OF CALIFORNIA

SAWAYA ARCHITECTURE

3565 7TH AVENUE
SAN DIEGO, CA 92103
SAWAYAARCHITECTURE.COM
(619) 916 - 8145

IDLEWILD ADUS

3153 IDLEWILD WAY

3153 IDLEWILD WY UNIT 1
3153 IDLEWILD WY UNIT 2
3153 IDLEWILD WY UNIT 3
3153 IDLEWILD WY UNIT 4

SAN DIEGO, CA 92117

DATE	BY	ISSUE DESCRIPTION
03-10-26	CC	SUBMITTAL

SAWAYA ARCHITECTURE

A1.0

SITE PLAN

2603
PRINT TO SCALE : 24" X 36"

LEGEND

BMP TYPES:

- SC-5: STRAW WATTLES
- SC-1: SILT FENCE
- MS — WM-1: MATERIAL DELIVERY AND STORAGE
- SWM — WM-5: SOLID WASTE MANAGEMENT
- WM-6: HAZARDOUS WASTE MANAGEMENT
- CWM — WM-8: CONCRETE WASTE MANAGEMENT
- SS — WM-9: SANITARY/SEPTIC WASTE MANAGEMENT
- SC-7: STREET CLEANING & VACUUMING

GENERAL NOTES

A. NEAREST DOWNSTREAM STORMWATER INLET TO BE SANDBAGGED AND PROTECTED DURING CONSTRUCTION ACCORDING TO RESIDENT ENGINEER'S REQUEST IF NEEDED.

B. KEEP PUBLIC ACCESS WAYS CLEAN AND FREE OF DEBRIS. STREET SWEEP DAILY WHEN NECESSARY. SET UP HOSEBIB STATION AT CONSTRUCTION ENTRANCE.

STORMWATER QUALITY NOTES

THIS PROJECT SHALL COMPLY WITH ALL CURRENT REQUIREMENTS OF THE STATE PERMIT: CALIFORNIA REGIONAL WATER QUALITY CONTROL BOARD (SDRWQCB), SAN DIEGO MUNICIPAL STORM WATER PERMIT, THE CITY OF SAN DIEGO LAND DEVELOPMENT CODE, AND THE STORM WATER STANDARDS MANUAL.

NOTES BELOW REPRESENT KEY MINIMUM REQUIREMENTS FOR CONSTRUCTION BMPS:

1. THE CONTRACTOR SHALL BE RESPONSIBLE FOR CLEANUP OF ALL SILT AND MUD ON ADJACENT STREET(S), DUE TO CONSTRUCTION VEHICLES OR ANY OTHER CONSTRUCTION ACTIVITY. AT THE END OF EACH WORK DAY, OR AFTER A STORM EVENT THAT CAUSES A BREACH IN INSTALLED CONSTRUCTION BMP'S WHICH MAY COMPROMISE STORM WATER QUALITY WITHIN AND STREET(S). A STABILIZED CONSTRUCTION EXIT MAY BE REQUIRED TO PREVENT CONSTRUCTION VEHICLES OR EQUIPMENT FROM TRACKING MUD OR SILT ONTO THE STREET.
2. ALL STOCKPILES OF SOIL AND/OR BUILDING MATERIALS THAT ARE INTENDED TO BE LEFT FOR A PERIOD OF GREATER THAN SEVEN CALENDAR DAYS ARE TO BE COVERED. ALL REMOVABLE BMP DEVICES SHALL BE IN PLACE AT THE END OF EACH WORKING DAY WHEN FIVE DAY RAIN PROBABILITY FORECAST EXCEEDS 40%.
3. A CONCRETE WASHOUT SHALL BE PROVIDED ON ALL PROJECTS WHICH PROPOSE THE CONSTRUCTION OF ANY CONCRETE IMPROVEMENTS WHICH ARE TO BE POURED IN PLACE ON SITE.
4. THE CONTRACTOR SHALL RESTORE ALL EROSION/SEDIMENT CONTROL DEVICES TO WORKING ORDER AFTER EACH RUN-OFF PRODUCING RAINFALL OR AFTER ANY MATERIAL BREACH IN EFFECTIVENESS.
5. ALL SLOPES THAT ARE CREATED OR DISTURBED BY CONSTRUCTION ACTIVITY MUST BE PROTECTED AGAINST EROSION AND SEDIMENT TRANSPORT AT ALL TIMES.
6. THE STORAGE OF ALL CONSTRUCTION MATERIALS AND EQUIPMENT MUST BE PROTECTED AGAINST ANY POTENTIAL RELEASE OF POLLUTANTS INTO THE ENVIRONMENT.

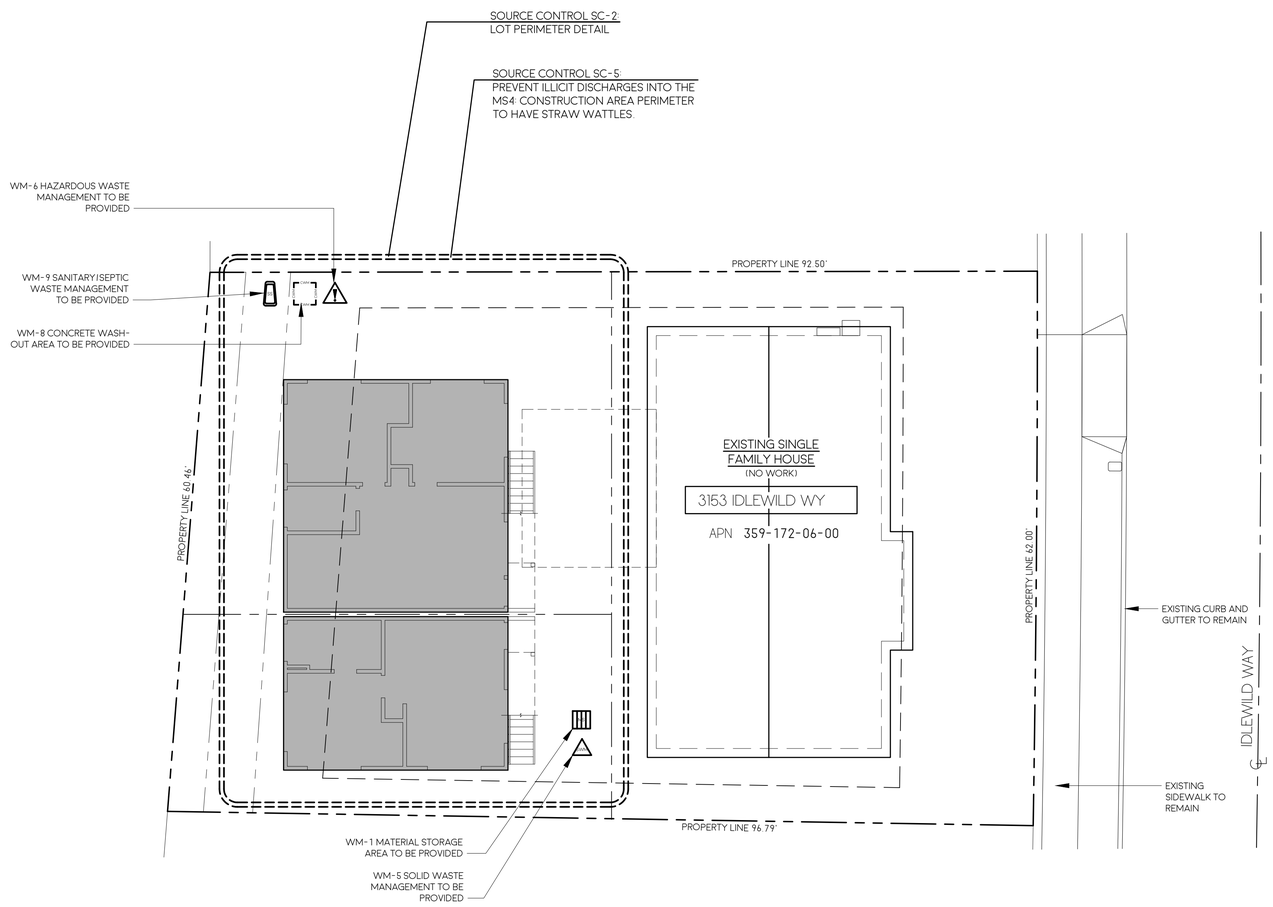

BMP PLAN 1

1/8"=1'-0"

NORTH

LICENSED ARCHITECT
CHRISTOPHER SAWAYA
C37363
REN: 06-30-27
STATE OF CALIFORNIA

SAWAYA ARCHITECTURE

3565 7TH AVENUE
SAN DIEGO, CA 92103
SAWAYAARCHITECTURE.COM
(619) 916 - 8145

IDLEWILD ADUS

3153 IDLEWILD WAY

3153 IDLEWILD WY UNIT 1
3153 IDLEWILD WY UNIT 2
3153 IDLEWILD WY UNIT 3
3153 IDLEWILD WY UNIT 4

SAN DIEGO, CA 92117

DATE	BY	ISSUE DESCRIPTION
03-10-26	CC	SUBMITTAL

SAWAYA ARCHITECTURE

A1.1

BMP PLAN

2603
PRINT TO SCALE : 24" X 36"

KEYNOTES:

01 REINFORCEMENT FOR GRAB BARS:
1. REINFORCEMENT SHALL BE SOLID LUMBER OR OTHER APPROVED CONSTRUCTION MATERIALS. REINFORCEMENT FOR GRAB BARS SHALL NOT BE LESS THAN 2 BY 8 INCH NOMINAL LUMBER (1.5 INCH BY 7.25 INCH ACTUAL DIMENSION) OR OTHER APPROVED CONSTRUCTION MATERIAL PROVIDING EQUAL HEIGHT AND LOAD CAPACITY. REINFORCEMENT SHALL BE LOCATED BETWEEN 32 INCHES AND 39 1/4 INCHES ABOVE THE FINISHED FLOOR FLUSH WITH THE WALL FRAMING.
2. WATER CLOSET REINFORCEMENT SHALL BE INSTALLED ON BOTH SIDE WALLS OF THE FIXTURE, OR ONE SIDE WALL AND THE BACK WALL.
3. SHOWER REINFORCEMENT SHALL BE CONTINUOUS WHERE WALL FRAMING IS PROVIDED.
4. BATHTUB AND COMBINATION BATHTUB/SHOWER REINFORCEMENT SHALL BE CONTINUOUS ON EACH END OF THE BATHTUB AND THE BACK ADDITIONALLY, BACK WALL REINFORCEMENT FOR A LOWER GRAB BAR SHALL BE PROVIDED WITH THE BOTTOM EDGE LOCATED NO MORE THAN 6 INCHES ABOVE THE BATHTUB RIM.

NOTES:

1. VENT OPENINGS SHALL BE PROTECTED BY NONCOMBUSTIBLE, CORROSION RESISTANT MESH AND MEETS ALL THE FOLLOWING REQUIREMENTS CRC R337.6.2; SDMC 149.0327(F). 1 INDIVIDUAL VENT OPENINGS SHALL NOT EXCEED 144 SQUARE INCHES THE DIMENSIONS OF THE OPENINGS SHALL BE A MINIMUM OF 1/16-INCH AND SHALL NOT EXCEED 1/8-INCH

LEGEND:

- WALL ASSEMBLY - SHEET A7.0 & 10/A7.1
- DOOR TAG
- WINDOW TAG

DOOR SCHEDULE

MARK	SIZE (W X H)	TYPE	OPERATION	MATERIAL	THICKNESS	FINISH	U-FACTOR	SHGC	COMMENTS
101	3'-0" X 6'-8"	1	ENTRY SWING	GLASS / FIBERGLASS	1-3/8"	PAINTED	0.30	0.23	
102	2'-6" X 6'-8"	2	SWING	WOOD SOLID CORE	1-3/8"	PAINTED			
103	4'-0" X 6'-8"	3	CLOSET BI-PASS	WOOD SOLID CORE	1-3/8"	PAINTED			
104	5'-0" X 6'-8"	3	CLOSET BI-PASS	WOOD SOLID CORE	1-3/8"	PAINTED			

WINDOW SCHEDULE

MARK	SIZE (W X H)	TYPE	OPERATION	MATERIAL	FINISH	U-FACTOR	SHGC	
A	6'-0" X 3'-4"	1	SLIDER	VINYL	FACTORY WHITE	0.30	0.23	
B	4'-0" X 1'-6"	1	SLIDER	VINYL	FACTORY WHITE	0.30	0.23	
C	3'-0" X 3'-4"	2	CASEMENT	VINYL	FACTORY WHITE	0.30	0.23	
D	2'-0" X 3'-4"	2	CASEMENT	VINYL	FACTORY WHITE	0.30	0.23	

A. VERIFY SIZE AND SPECIFICATIONS WITH MANUFACTURER PRIOR TO ORDERING MATERIALS AND BEGINNING OF CONSTRUCTION.
B. ALL WINDOWS SHALL BE DUAL-GLAZED LOW-E2.
C. HEAD HEIGHTS ARE AT 6'-8" AFF UNLESS NOTED OTHERWISE IN SCHEDULE OR ON BUILDING ELEVATIONS.
D. SEE BUILDING ELEVATIONS FOR OPERATION DIRECTION.
E. * DENOTES SAFETY GLAZING. WINDOWS WITHIN A 24" ARCH OF EITHER VERTICAL EDGE OF DOORS IN THE CLOSED POSITION AND WITHIN 18" OF FLOOR SHALL BE SAFETY GLAZING. SEE FLOOR PLANS FOR LOCATIONS.
F. FOR TYPICAL WINDOW FRAMING, SEE DETAIL 9/A7.1
G. FOR WINDOW FLASHING DETAILS, SEE 5/A7.1
H. GLAZING FRAMES MADE OF VINYL MATERIALS SHALL HAVE WELDED CORNERS. METAL REINFORCEMENT IN THE INTERLOCK AREA, AND BE CERTIFIED TO THE MOST CURRENT EDITION OF ANSI/AAMA/NWWDA 101/I.S.2 STRUCTURAL REQUIREMENTS.
I. ALL EXTERIOR WINDOW AND EXTERIOR GLAZED DOOR ASSEMBLIES SHALL BE CONSTRUCTED OF MULTI-PANE GLAZING WITH A MINIMUM OF ONE TEMPERED PANE MEETING THE REQUIREMENTS OF CRC R308
J. ALL EXTERIOR DOORS SHALL BE CONSTRUCTED OF SOLID CORE WOOD THAT COMPLIES WITH THE FOLLOWING REQUIREMENTS:
1. STILES AND RAILS SHALL NOT BE LESS THAN 1 3/8 INCHES THICK
2. RAISED PANELS SHALL NOT BE LESS THAN 1 1/4 INCHES THICK; THE EXTERIOR PERIMETER OF THE RAISED PANEL MAY TAPER TO A TONGUE NOT LESS THAN 3/8 INCH THICK

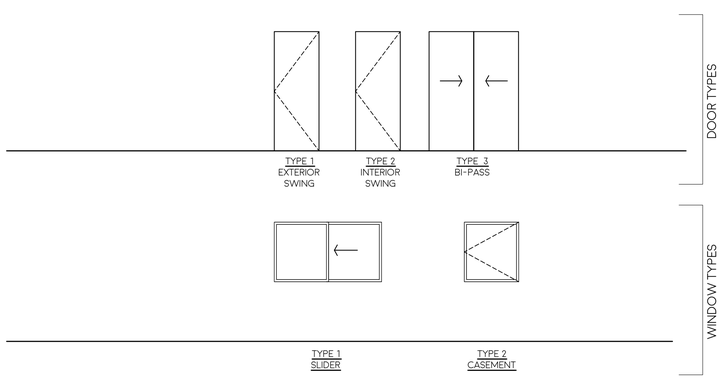

OPENING SCHEDULE | 2

NTS

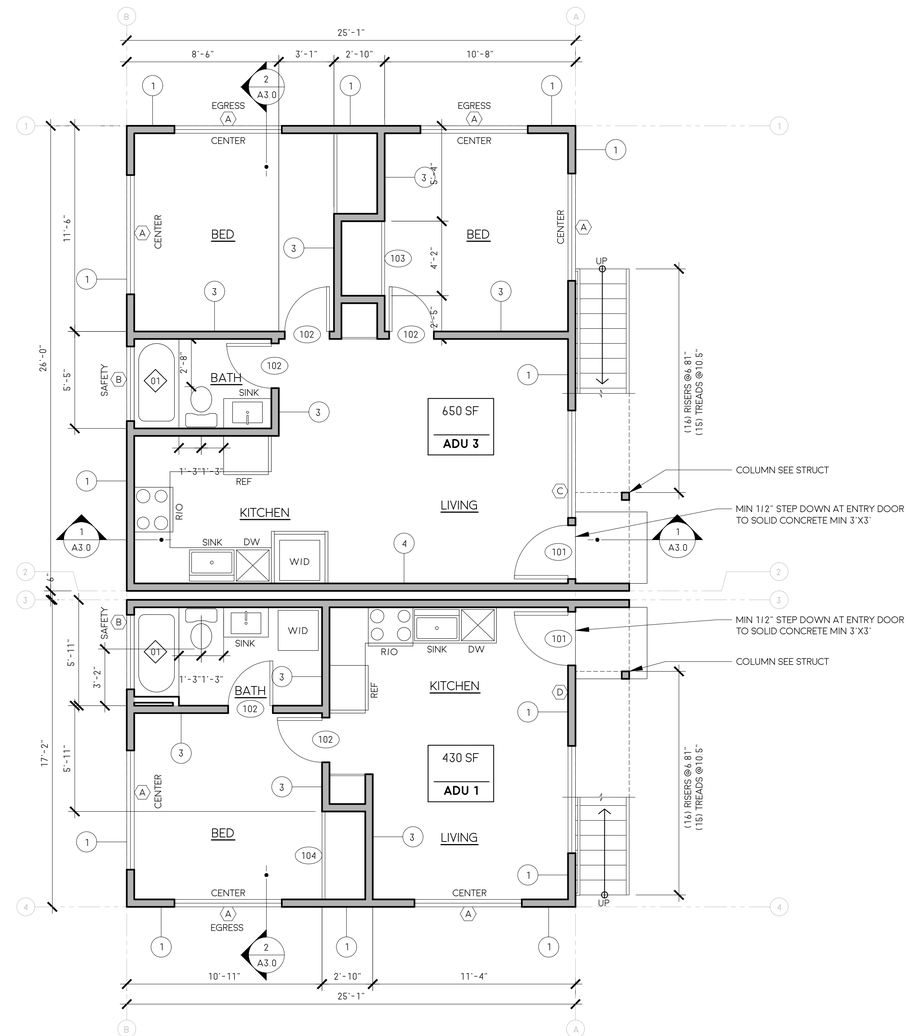

LEVEL 1 FLOOR PLAN | 1

1/4"=1'-0"

NORTH

LICENSED ARCHITECT
CHRISTOPHER SAWAYA
C37363
REN: 06-30-27
STATE OF CALIFORNIA

SAWAYA ARCHITECTURE

3565 7TH AVENUE
SAN DIEGO, CA 92103
SAWAYAARCHITECTURE.COM
(619) 916 - 8145

IDLEWILD ADUS

3153 IDLEWILD WAY

3153 IDLEWILD WY UNIT 1
3153 IDLEWILD WY UNIT 2
3153 IDLEWILD WY UNIT 3
3153 IDLEWILD WY UNIT 4

SAN DIEGO, CA 92117

DATE	BY	ISSUE DESCRIPTION
03-10-26	CC	SUBMITTAL

SAWAYA ARCHITECTURE

A2.0

LEVEL 1
FLOOR PLAN
OPENING SCHEDULE

2603
PRINT TO SCALE : 24" X 36"

KEYNOTES:

01 REINFORCEMENT FOR GRAB BARS:
1. REINFORCEMENT SHALL BE SOLID LUMBER OR OTHER APPROVED CONSTRUCTION MATERIALS. REINFORCEMENT FOR GRAB BARS SHALL NOT BE LESS THAN 2 BY 8 INCH NOMINAL LUMBER (1.5 INCH BY 7.25 INCH ACTUAL DIMENSION) OR OTHER APPROVED CONSTRUCTION MATERIAL PROVIDING EQUAL HEIGHT AND LOAD CAPACITY. REINFORCEMENT SHALL BE LOCATED BETWEEN 32 INCHES AND 39(1/4) INCHES ABOVE THE FINISHED FLOOR FLUSH WITH THE WALL FRAMING.
2. WATER CLOSET REINFORCEMENT SHALL BE INSTALLED ON BOTH SIDE WALLS OF THE FIXTURE, OR ONE SIDE WALL AND THE BACK WALL.
3. SHOWER REINFORCEMENT SHALL BE CONTINUOUS WHERE WALL FRAMING IS PROVIDED.
4. BATHTUB AND COMBINATION BATHTUB/SHOWER REINFORCEMENT SHALL BE CONTINUOUS ON EACH END OF THE BATHTUB AND THE BACK ADDITIONALLY, BACK WALL REINFORCEMENT FOR A LOWER GRAB BAR SHALL BE PROVIDED WITH THE BOTTOM EDGE LOCATED NO MORE THAN 6 INCHES ABOVE THE BATHTUB RIM.

NOTES:

1. VENT OPENINGS SHALL BE PROTECTED BY NONCOMBUSTIBLE, CORROSION RESISTANT MESH AND MEETS ALL THE FOLLOWING REQUIREMENTS CRC R337.6.2; SDMC 149.0327(F). 1 INDIVIDUAL VENT OPENINGS SHALL NOT EXCEED 144 SQUARE INCHES □THE DIMENSIONS OF THE OPENINGS SHALL BE A MINIMUM OF 1/16-INCH AND SHALL NOT EXCEED 1/8-INCH

LEGEND:

- WALL ASSEMBLY - SHEET A7.0 & 10/A7.1
- DOOR TAG
- WINDOW TAG

DOOR SCHEDULE

MARK	SIZE (W X H)	TYPE	OPERATION	MATERIAL	THICKNESS	FINISH	U-FACTOR	SHGC	COMMENTS
101	3'-0" X 6'-8"	1	ENTRY SWING	GLASS / FIBERGLASS	1-3/8"	PAINTED	0.30	0.23	
102	2'-6" X 6'-8"	2	SWING	WOOD SOLID CORE	1-3/8"	PAINTED			
103	4'-0" X 6'-8"	3	CLOSET BI-PASS	WOOD SOLID CORE	1-3/8"	PAINTED			
104	5'-0" X 6'-8"	3	CLOSET BI-PASS	WOOD SOLID CORE	1-3/8"	PAINTED			

WINDOW SCHEDULE

MARK	SIZE (W X H)	TYPE	OPERATION	MATERIAL	FINISH	U-FACTOR	SHGC	
A	6'-0" X 3'-4"	1	SLIDER	VINYL	FACTORY WHITE	0.30	0.23	
B	4'-0" X 1'-6"	1	SLIDER	VINYL	FACTORY WHITE	0.30	0.23	
C	3'-0" X 3'-4"	2	CASEMENT	VINYL	FACTORY WHITE	0.30	0.23	
D	2'-0" X 3'-4"	2	CASEMENT	VINYL	FACTORY WHITE	0.30	0.23	

A. VERIFY SIZE AND SPECIFICATIONS WITH MANUFACTURER PRIOR TO ORDERING MATERIALS AND BEGINNING OF CONSTRUCTION.
B. ALL WINDOWS SHALL BE DUAL-GLAZED LOW-E2.
C. HEAD HEIGHTS ARE AT 6'-8" AFF UNLESS NOTED OTHERWISE IN SCHEDULE OR ON BUILDING ELEVATIONS.
D. SEE BUILDING ELEVATIONS FOR OPERATION DIRECTION.
E. *: DENOTES SAFETY GLAZING. WINDOWS WITHIN A 24" ARCH OF EITHER VERTICAL EDGE OF DOORS IN THE CLOSED POSITION AND WITHIN 18" OF FLOOR SHALL BE SAFETY GLAZING. SEE FLOOR PLANS FOR LOCATIONS.
F. FOR TYPICAL WINDOW FRAMING, SEE DETAIL 9/A7.1
G. FOR WINDOW FLASHING DETAILS, SEE 5/A7.1
H. GLAZING FRAMES MADE OF VINYL MATERIALS SHALL HAVE WELDED CORNERS. METAL REINFORCEMENT IN THE INTERLOCK AREA, AND BE CERTIFIED TO THE MOST CURRENT EDITION OF ANSI/AAMA/NWWDA 101/I.S.2 STRUCTURAL REQUIREMENTS.
I. ALL EXTERIOR WINDOW AND EXTERIOR GLAZED DOOR ASSEMBLIES SHALL BE CONSTRUCTED OF MULTI-PANE GLAZING WITH A MINIMUM OF ONE TEMPERED PANE MEETING THE REQUIREMENTS OF CRC R308
J. ALL EXTERIOR DOORS SHALL BE CONSTRUCTED OF SOLID CORE WOOD THAT COMPLIES WITH THE FOLLOWING REQUIREMENTS:
1. STILES AND RAILS SHALL NOT BE LESS THAN 1 3/8 INCHES THICK
2. RAISED PANELS SHALL NOT BE LESS THAN 1 1/4 INCHES THICK; THE EXTERIOR PERIMETER OF THE RAISED PANEL MAY TAPER TO A TONGUE NOT LESS THAN 3/8 INCH THICK

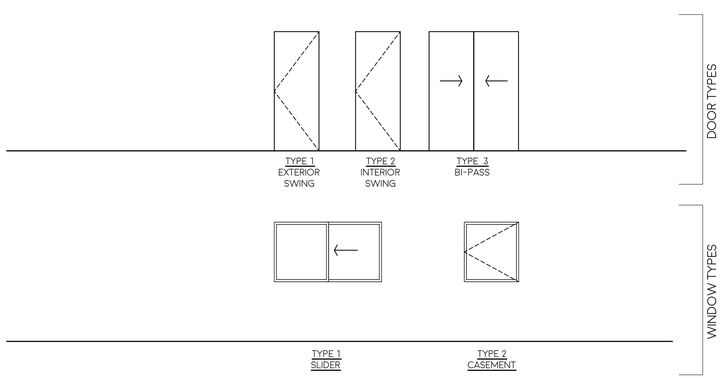

OPENING SCHEDULE | 2

NTS

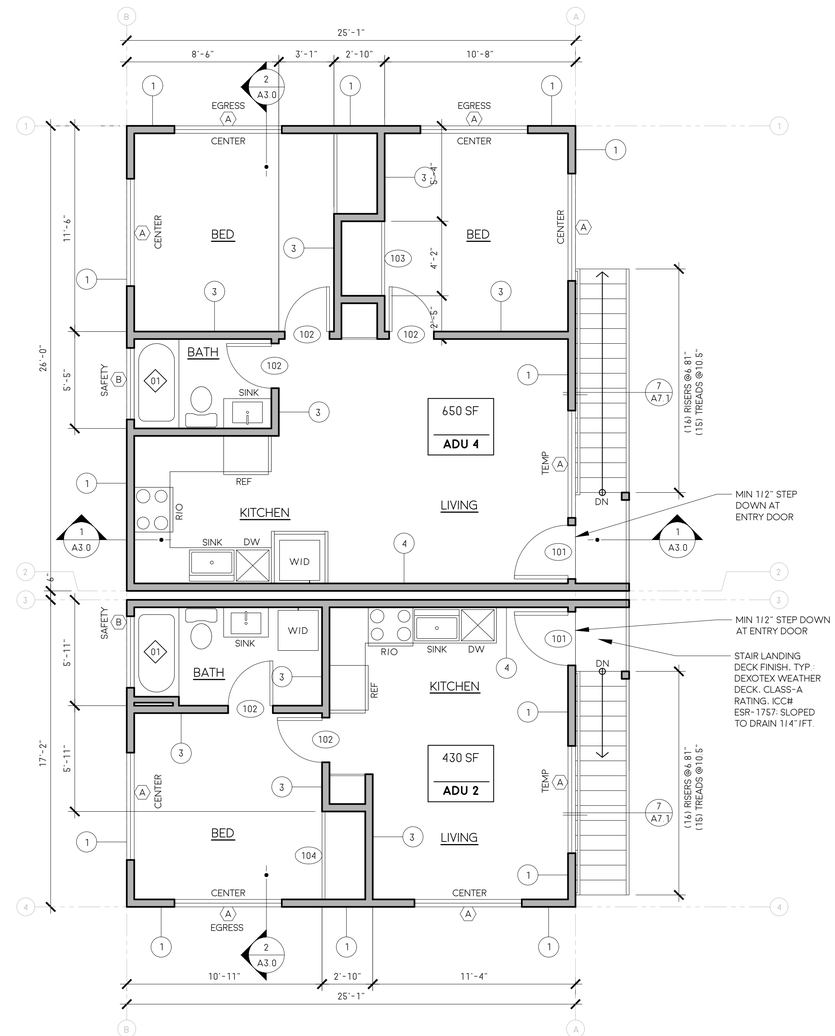

LEVEL 2 FLOOR PLAN | 1

1/4"=1'-0"

NORTH

LICENSED ARCHITECT
CHRISTOPHER SAWAYA
C37363
REN: 06-30-27
STATE OF CALIFORNIA

SAWAYA ARCHITECTURE

3565 7TH AVENUE
SAN DIEGO, CA 92103
SAWAYAARCHITECTURE.COM
(619) 916 - 8145

IDLEWILD ADUS

3153 IDLEWILD WAY

3153 IDLEWILD WY UNIT 1
3153 IDLEWILD WY UNIT 2
3153 IDLEWILD WY UNIT 3
3153 IDLEWILD WY UNIT 4

SAN DIEGO, CA 92117

DATE	BY	ISSUE DESCRIPTION
03-10-26	CC	SUBMITTAL

SAWAYA ARCHITECTURE

A2.1

LEVEL 2
FLOOR PLAN
OPENING SCHEDULE

2603
PRINT TO SCALE : 24" X 36"

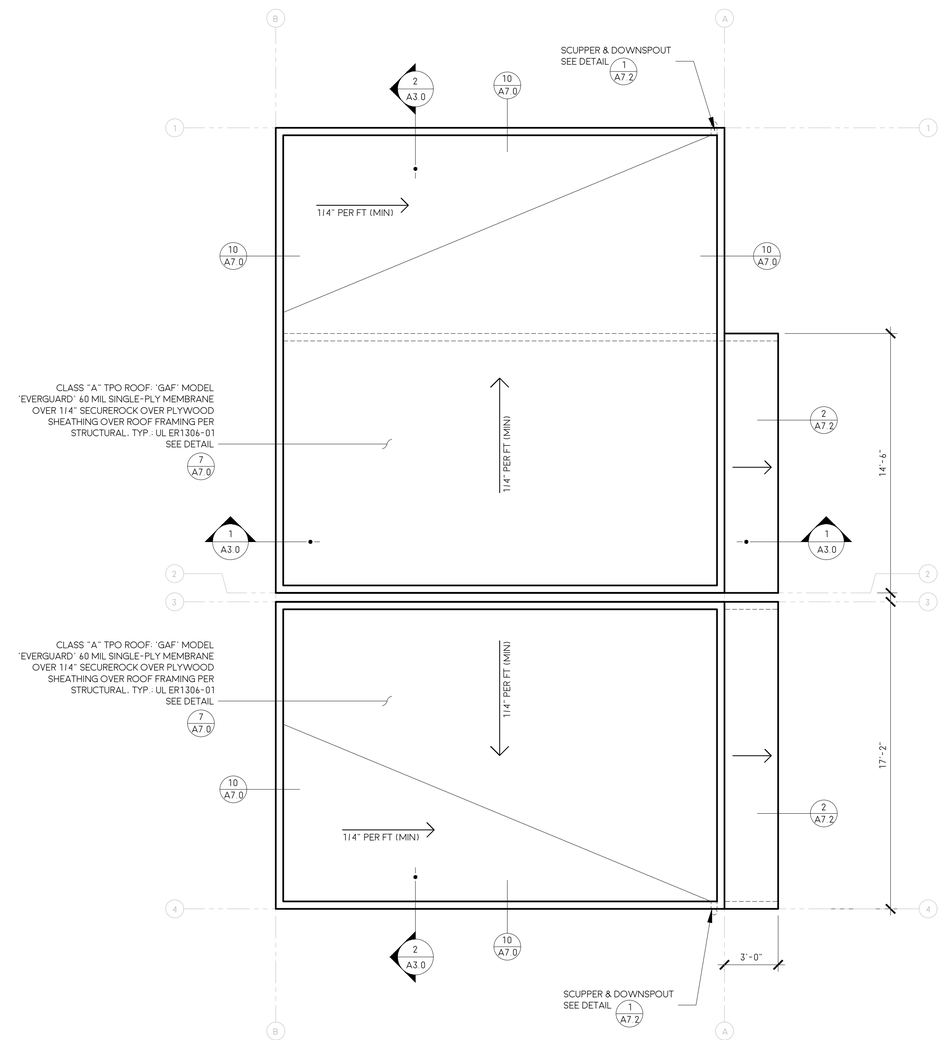

ROOF PLAN

1/4"=1'-0"

1

NORTH

LICENSED ARCHITECT
CHRISTOPHER SAWAYA
C35363
REN: 06-30-27
STATE OF CALIFORNIA

SAWAYA ARCHITECTURE

3565 7TH AVENUE
SAN DIEGO, CA 92103
SAWAYAARCHITECTURE.COM
(619) 916 - 8145

IDLEWILD ADUS

3153 IDLEWILD WAY

3153 IDLEWILD WY UNIT 1
3153 IDLEWILD WY UNIT 2
3153 IDLEWILD WY UNIT 3
3153 IDLEWILD WY UNIT 4

SAN DIEGO, CA 92117

DATE	BY	ISSUE DESCRIPTION
03-10-26	CC	SUBMITTAL

SAWAYA ARCHITECTURE

A2.2

ROOF PLAN

2603
PRINT TO SCALE : 24" X 36"

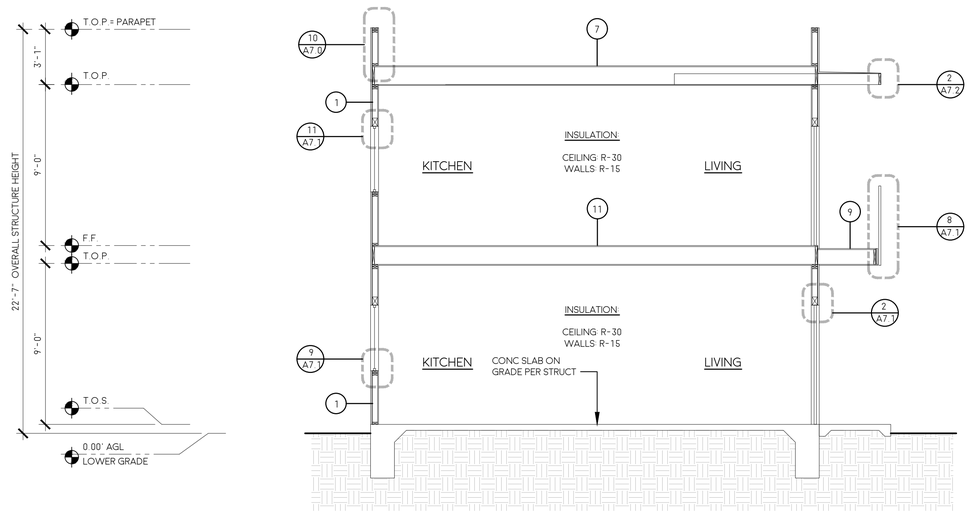

LEGEND:

- WALL / ROOF / FLOOR ASSEMBLIES - SHEET A7.0

SECTION 1

1/4"=1'-0"

1

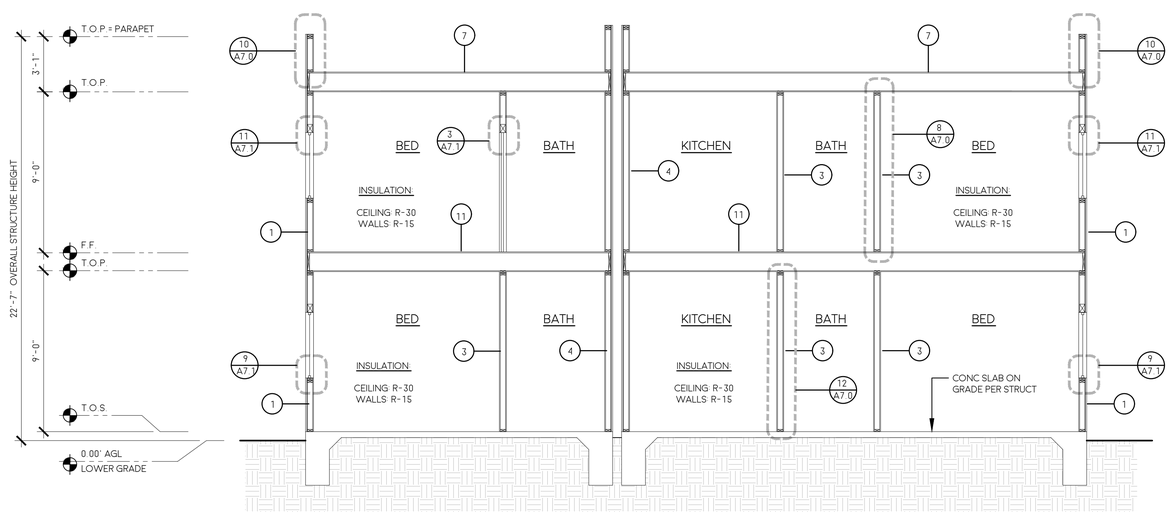

SECTION 2

1/4"=1'-0"

2

LICENSED ARCHITECT
CHRISTOPHER SAWAYA
C35263
REN: 06-30-27
STATE OF CALIFORNIA

SAWAYA ARCHITECTURE

3565 7TH AVENUE
SAN DIEGO, CA 92103
SAWAYAARCHITECTURE.COM
(619) 916 - 8145

IDLEWILD ADUS

3153 IDLEWILD WAY

3153 IDLEWILD WY UNIT 1
3153 IDLEWILD WY UNIT 2
3153 IDLEWILD WY UNIT 3
3153 IDLEWILD WY UNIT 4

SAN DIEGO, CA 92117

DATE	BY	ISSUE DESCRIPTION
03-10-26	CC	SUBMITTAL

SAWAYA ARCHITECTURE

A3.0

BUILDING SECTIONS

2603
PRINT TO SCALE : 24" X 36"

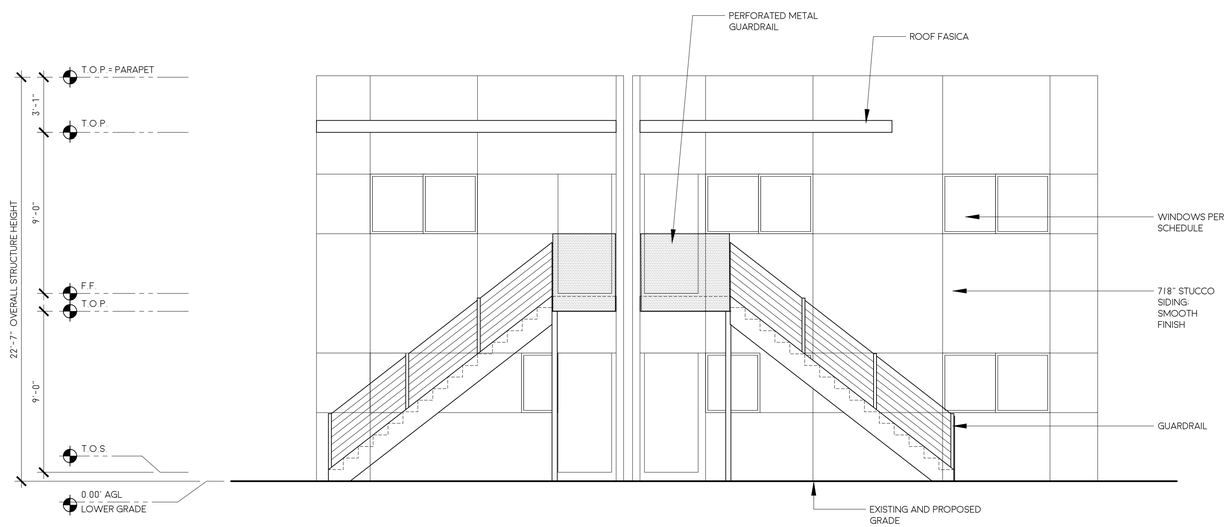

SOUTH ELEVATION

1/4"=1'-0"

1

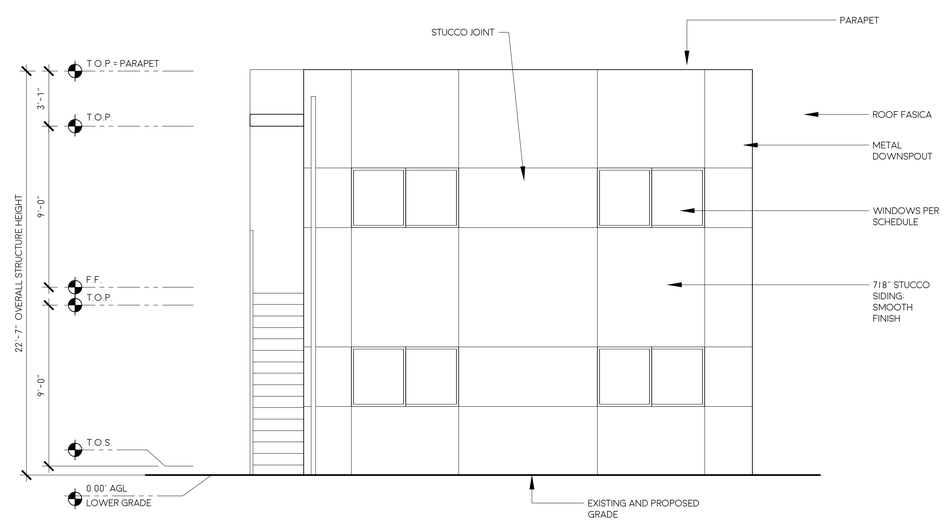

EAST ELEVATION

1/4"=1'-0"

2

LICENSED ARCHITECT
CHRISTOPHER SAWAYA
C35363
REN: 06-30-27
STATE OF CALIFORNIA

SAWAYA ARCHITECTURE

3565 7TH AVENUE
SAN DIEGO, CA 92103
SAWAYAARCHITECTURE.COM
(619) 916 - 8145

IDLEWILD ADUS

3153 IDLEWILD WAY

3153 IDLEWILD WY UNIT 1
3153 IDLEWILD WY UNIT 2
3153 IDLEWILD WY UNIT 3
3153 IDLEWILD WY UNIT 4

SAN DIEGO, CA 92117

DATE	BY	ISSUE DESCRIPTION
03-10-26	CC	SUBMITTAL

SAWAYA ARCHITECTURE

A4.0

EXTERIOR ELEVATIONS

2603
PRINT TO SCALE : 24" X 36"

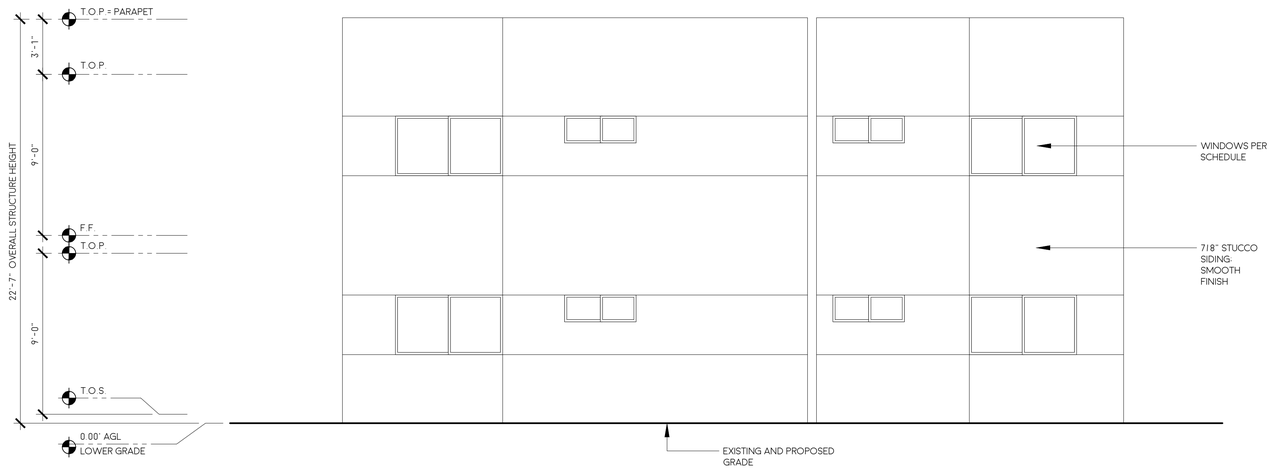

NORTH ELEVATION | 1

1/4"=1'-0"

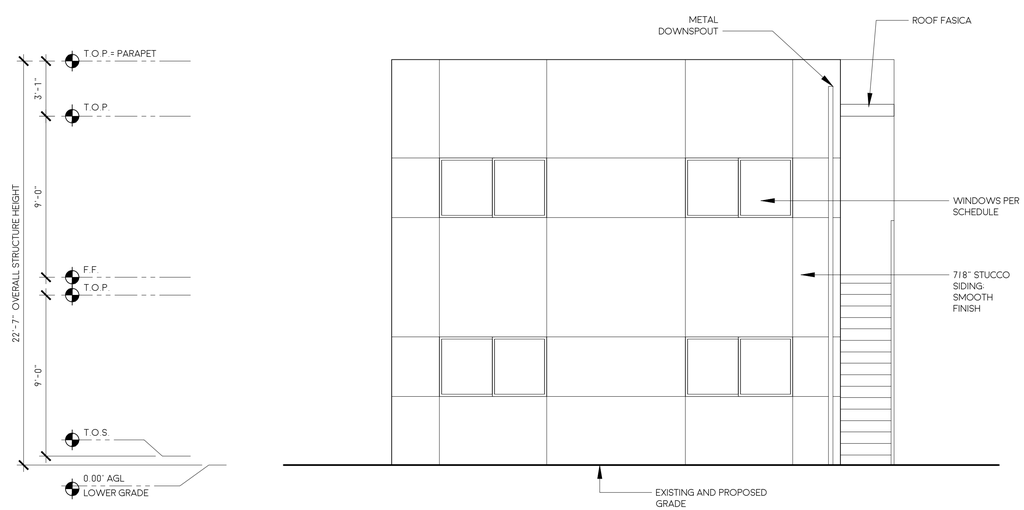

WEST ELEVATION | 2

1/4"=1'-0"

LICENSED ARCHITECT
CHRISTOPHER SAWAYA
C37363
REN: 06-30-27
STATE OF CALIFORNIA

SAWAYA ARCHITECTURE

3565 7TH AVENUE
SAN DIEGO, CA 92103
SAWAYAARCHITECTURE.COM
(619) 916 - 8145

IDLEWILD ADUS

3153 IDLEWILD WAY

3153 IDLEWILD WY UNIT 1
3153 IDLEWILD WY UNIT 2
3153 IDLEWILD WY UNIT 3
3153 IDLEWILD WY UNIT 4

SAN DIEGO, CA 92117

DATE	BY	ISSUE DESCRIPTION
03-10-26	CC	SUBMITTAL

SAWAYA ARCHITECTURE

A4.1

EXTERIOR ELEVATIONS

2603
PRINT TO SCALE : 24" X 36"

LEGEND

- INTERIOR CEILING LED CAN LIGHT (4")
- UNDER COUNTER LIGHT
- CEILING MOUNTED PENDANT LIGHT
- WALL MOUNTED LIGHT SCONCE
- CEILING MOUNTED 80 CFM EXHAUST FAN WITH LIGHT
- (S) PERMANENTLY-WIRED CEILING-MOUNTED SMOKE DETECTOR WITH BATTERY BACKUP
- $ TOGGLE SWITCH AT 42" AFF U.N.O.
- $3 3-WAY SWITCH AT 42" AFF U.N.O.
- GFCI 120V AFCI|GFCI DUPLEX RECEPTACLE OUTLET AT 42" AFF U.N.O.
- 120V AFCI DUPLEX RECEPTACLE OUTLET AT 15" AFF U.N.O.
- CM PERMANENTLY-WIRED CEILING-MOUNTED CARBON MONOXIDE DETECTOR WITH BATTERY BACKUP
- DOORBELL BUTTONS OR CONTROLS SHALL NOT EXCEED 48 INCHES ABOVE EXTERIOR FLOOR OR LANDING. MEASURED FROM THE TOP OF THE DOORBELL BUTTON ASSEMBLY. WHERE DOORBELL BUTTONS INTEGRATED WITH OTHER FEATURES ARE REQUIRED TO BE INSTALLED ABOVE 48 INCHES MEASURED FROM THE EXTERIOR FLOOR OR LANDING, A STANDARD DOORBELL BUTTON OR CONTROL SHALL ALSO BE PROVIDED AT A HEIGHT NOT EXCEEDING 48 INCHES ABOVE EXTERIOR FLOOR OR LANDING, MEASURED FROM THE TOP OF THE DOORBELL BUTTON OR CONTROL.

ELECTRICAL NOTES

A. ALL NEW BATHROOM RECEPTACLE OUTLETS SHALL BE ISOLATED AND SERVED BY A MINIMUM OF 20 AMP BRANCH CIRCUIT PER NEC ART. 210-52(D).
B. ALL RECEPTACLE OUTLET LOCATIONS WILL COMPLY WITH NEC ART. 210-52(A) REQUIREMENTS.
C. HALLWAYS GREATER THAN 10' IN LENGTH REQUIRE AT LEAST ONE RECEPTACLE OUTLET PER NEC ART. 210-52(H).
D. PROVIDE GROUND FAULT CIRCUIT INTERRUPTERS PER NEC ART. 210-8. ALL 125V, SINGLE-PHASE, 15-20 AMP RECEPTACLES SHALL BE INSTALLED AT ALL LOCATIONS PER REQUIREMENTS.
E. SMOKE DETECTORS SHALL SOUND AN ALARM AUDIBLE IN ALL SLEEPING AREAS OF THE HOUSE. ALL NEW SMOKE DETECTORS ADDED AT EXISTING CONSTRUCTION NEED ONLY BE BATTERY POWERED. (CBC SECTION 907.2.10.1.2)
F. IN NEW CONSTRUCTION, REQUIRED SMOKE ALARMS SHALL RECEIVE THEIR PRIMARY POWER FROM THE BUILDING WIRING WHERE SUCH WIRING IS SERVED FROM A COMMERCIAL SOURCE AND SHALL BE EQUIPPED WITH A BATTERY BACK-UP. SMOKE ALARMS SHALL EMIT A SIGNAL WHEN THE BATTERIES ARE LOW. WIRING SHALL BE PERMANENT AND WITHOUT A DISCONNECTING SWITCH OTHER THAN AS REQUIRED FOR OVERCURRENT PROTECTION. (CBC SECTION 907.2.10.2)
G. WHERE MORE THAN ONE SMOKE ALARM IS REQUIRED TO BE INSTALLED, THE SMOKE ALARMS SHALL BE INTERCONNECTED IN SUCH A MANNER THAT THE ACTIVATION OF ONE ALARM WILL ACTIVATE ALL OF THE ALARMS IN THE HOUSE. THE ALARM SHALL BE CLEARLY AUDIBLE IN ALL BEDROOMS OVER BACKGROUND NOISE LEVELS WITH ALL INTERVENING DOORS CLOSED. (CBC SECTION 907.2.10.3)
H. RECEPTACLE OUTLETS ON COUNTERTOPS SHALL BE INSTALLED AT 48" O.C. MAX. PER NEC ART. 210-52(C) REQUIREMENTS.
I. AT LEAST 50% OF THE INSTALLED WATTAGE OF LIGHT FIXTURES IN KITCHENS SHALL BE FLUORESCENT.
J. OUTDOOR LIGHT FIXTURES THAT ARE ATTACHED TO THE BUILDING SHALL BE FLUORESCENT, OR CONTROLLED BY A COMBINATION OF MOTION SENSORS AND PHOTO-CONTROL.
K. 5 AIR CHANGES PER HOUR FOR BATHROOM AND LAUNDRY ROOM EXHAUST FAN CAPACITIES.
L. LUMINAIRES TO BE INSTALLED RECESSED IN INSULATED CEILING SHALL BE APPROVED FOR ZERO CLEARANCE INSULATION COVER (IC) BY A NATIONALLY RECOGNIZED TESTING LABORATORIES RECOGNIZED BY THE INTERNATIONAL CONFERENCE OF BUILDING OFFICIALS.
M. GENERAL LIGHTING USE IN RESIDENTIAL LIVING SPACES AND EXTERIOR LIGHTING LUMINAIRES SHALL BE HIGH EFFICACY TYPE.
N. MOTION SENSORS SHALL BE ALLOWED FOR BATHROOMS, LAUNDRY ROOMS WITH MANUEL-ON AUTO-OFF IF LUMINAIRES ARE NOT HIGH EFFICACY TYPES.
O. DIMMER OR MANUEL-ON OCCUPANCY SENSORS SHALL BE ALLOWED FOR AREAS OTHER THAN KITCHENS, BATHROOMS, LAUNDRY ROOMS, GARAGES, AND UTILITY ROOMS IF LUMINARIES ARE NOT HIGH EFFICACY TYPES.
P. PROVIDE COMPACT FLUORESCENT BULBS AT ALL FIXTURES WHERE FLUORESCENT BULBS ARE NOT ALREADY REQUIRED.
Q. VERIFY ALL TELEPHONE AND CABLE JACK LOCATIONS WITH OWNER PRIOR TO INSTALLATION.
R. VERIFY LOCATION AND POWER REQUIREMENTS FOR HVAC UNIT WITH MECHANICAL CONTRACTOR.
S. IF DURING THE COURSE OF CONSTRUCTION, ANY HAZARDOUS MATERIALS ARE ENCOUNTERED, THE CONTRACTOR SHALL DEMOLISH THE HAZARDOUS MATERIALS IN ACCORDANCE WITH LOCAL STATE AND FEDERAL REGULATIONS.
T. ALL LOCATIONS TO HAVE TAMPER-RESISTANT RECEPTACLES.
U. ALL RECEPTACLES INSTALLED IN DAMP OR WET LOCATIONS TO BE WEATHER RESISTANT.
V. ALL OUTLETS IN ALL ROOMS TO BE ARC-FAULT PROTECTED.
W. ALL OUTLETS IN LOCATIONS AS DESCRIBED IN NEC 210.8 TO BE GFCI PROTECTED.
X. ALL NON-LOCKING-TYPE 125-VOLT, 15- AND 20-AMPERE RECEPTACLES IN LOCATIONS AS DESCRIBED IN NEC 210.52 SHALL BE TAMPER RESISTANT RECEPTACLES.
Y. ELECTRICAL RECEPTACLE OUTLETS, SWITCHES AND CONTROLS (INCLUDING CONTROLS FOR HEATING, VENTILATION AND AIR CONDITIONING) INTENDED TO BE USED BY OCCUPANTS SHALL BE LOCATED NO MORE THAN 48 INCHES MEASURED FROM THE TOP OF THE OUTLET BOX AND NOT LESS THAN 15 INCHES MEASURED FROM THE BOTTOM OF THE OUTLET BOX ABOVE THE FINISH FLOOR.
EXCEPTIONS:
1. DEDICATED RECEPTACLE OUTLETS; FLOOR RECEPTACLE OUTLETS; CONTROLS MOUNTED ON CEILING FANS AND CEILING LIGHTS; AND CONTROLS LOCATED ON APPLIANCES.
2. RECEPTACLE OUTLETS REQUIRED BY THE CALIFORNIA ELECTRICAL CODE ON A WALL SPACE WHERE THE DISTANCE BETWEEN THE FINISHED FLOOR AND A BUILT-IN FEATURE ABOVE THE FINISH FLOOR, SUCH AS A WINDOW, IS LESS THAN 15 I INCHES".

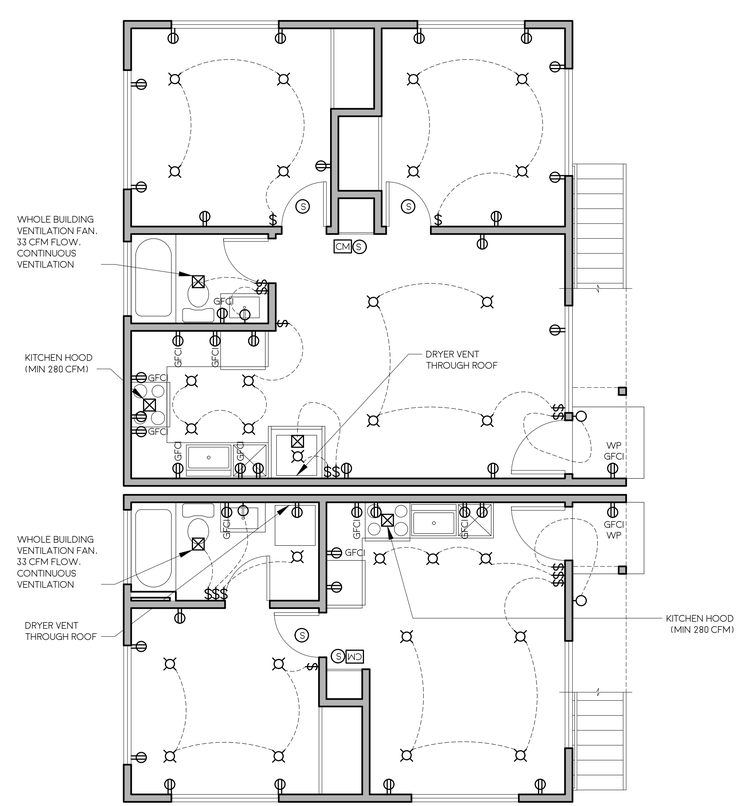

LEVEL 1 ELECTRICAL PLAN | 1

1/4"=1'-0"

LICENSED ARCHITECT
CHRISTOPHER SAWAYA
C35363
REN. 06-30-27
STATE OF CALIFORNIA

SAWAYA ARCHITECTURE

3565 7TH AVENUE
SAN DIEGO, CA 92103
SAWAYAARCHITECTURE.COM
(619) 916 - 8145

IDLEWILD ADUS

3153 IDLEWILD WAY

3153 IDLEWILD WY UNIT 1
3153 IDLEWILD WY UNIT 2
3153 IDLEWILD WY UNIT 3
3153 IDLEWILD WY UNIT 4

SAN DIEGO, CA 92117

DATE	BY	ISSUE DESCRIPTION
03-10-26	CC	SUBMITTAL

SAWAYA ARCHITECTURE

A5.0

LEVEL 1
ELECTRICAL PLAN

2603
PRINT TO SCALE : 24" X 36"

LEGEND

- INTERIOR CEILING LED CAN LIGHT (4")
- UNDER COUNTER LIGHT
- CEILING MOUNTED PENDANT LIGHT
- WALL MOUNTED LIGHT SCONCE
- CEILING MOUNTED 80 CFM EXHAUST FAN WITH LIGHT
- (S) PERMANENTLY-WIRED CEILING-MOUNTED SMOKE DETECTOR WITH BATTERY BACKUP
- $ TOGGLE SWITCH AT 42" AFF U.N.O.
- $3 3-WAY SWITCH AT 42" AFF U.N.O.
- GFCI 120V AFCI/GFCI DUPLEX RECEPTACLE OUTLET AT 42" AFF U.N.O.
- 120V AFCI DUPLEX RECEPTACLE OUTLET AT 15" AFF U.N.O.
- CM PERMANENTLY-WIRED CEILING-MOUNTED CARBON MONOXIDE DETECTOR WITH BATTERY BACKUP
- DOORBELL BUTTONS OR CONTROLS SHALL NOT EXCEED 48 INCHES ABOVE EXTERIOR FLOOR OR LANDING. MEASURED FROM THE TOP OF THE DOORBELL BUTTON ASSEMBLY. WHERE DOORBELL BUTTONS INTEGRATED WITH OTHER FEATURES ARE REQUIRED TO BE INSTALLED ABOVE 48 INCHES MEASURED FROM THE EXTERIOR FLOOR OR LANDING. A STANDARD DOORBELL BUTTON OR CONTROL SHALL ALSO BE PROVIDED AT A HEIGHT NOT EXCEEDING 48 INCHES ABOVE EXTERIOR FLOOR OR LANDING. MEASURED FROM THE TOP OF THE DOORBELL BUTTON OR CONTROL

ELECTRICAL NOTES

A. ALL NEW BATHROOM RECEPTACLE OUTLETS SHALL BE ISOLATED AND SERVED BY A MINIMUM OF 20 AMP BRANCH CIRCUIT PER NEC ART. 210-52(D).
B. ALL RECEPTACLE OUTLET LOCATIONS WILL COMPLY WITH NEC ART. 210-52(A) REQUIREMENTS.
C. HALLWAYS GREATER THAN 10' IN LENGTH REQUIRE AT LEAST ONE RECEPTACLE OUTLET PER NEC ART. 210-52(H).
D. PROVIDE GROUND FAULT CIRCUIT INTERRUPTERS PER NEC ART. 210-8. ALL 125V, SINGLE-PHASE, 15-20 AMP RECEPTACLES SHALL BE INSTALLED AT ALL LOCATIONS PER REQUIREMENTS.
E. SMOKE DETECTORS SHALL SOUND AN ALARM AUDIBLE IN ALL SLEEPING AREAS OF THE HOUSE. ALL NEW SMOKE DETECTORS ADDED AT EXISTING CONSTRUCTION NEED ONLY BE BATTERY POWERED. (CBC SECTION 907.2.10.1.2)
F. IN NEW CONSTRUCTION, REQUIRED SMOKE ALARMS SHALL RECEIVE THEIR PRIMARY POWER FROM THE BUILDING WIRING WHERE SUCH WIRING IS SERVED FROM A COMMERCIAL SOURCE AND SHALL BE EQUIPPED WITH A BATTERY BACK-UP. SMOKE ALARMS SHALL EMIT A SIGNAL WHEN THE BATTERIES ARE LOW. WIRING SHALL BE PERMANENT AND WITHOUT A DISCONNECTING SWITCH OTHER THAN AS REQUIRED FOR OVERCURRENT PROTECTION. (CBC SECTION 907.2.10.2)
G. WHERE MORE THAN ONE SMOKE ALARM IS REQUIRED TO BE INSTALLED, THE SMOKE ALARMS SHALL BE INTERCONNECTED IN SUCH A MANNER THAT THE ACTIVATION OF ONE ALARM WILL ACTIVATE ALL OF THE ALARMS IN THE HOUSE. THE ALARM SHALL BE CLEARLY AUDIBLE IN ALL BEDROOMS OVER BACKGROUND NOISE LEVELS WITH ALL INTERVENING DOORS CLOSED. (CBC SECTION 907.2.10.3)
H. RECEPTACLE OUTLETS ON COUNTERTOPS SHALL BE INSTALLED AT 48" O.C. MAX. PER NEC ART. 210-52(C) REQUIREMENTS.
I. AT LEAST 50% OF THE INSTALLED WATTAGE OF LIGHT FIXTURES IN KITCHENS SHALL BE FLUORESCENT.
J. OUTDOOR LIGHT FIXTURES THAT ARE ATTACHED TO THE BUILDING SHALL BE FLUORESCENT, OR CONTROLLED BY A COMBINATION OF MOTION SENSORS AND PHOTO-CONTROL.
K. 5 AIR CHANGES PER HOUR FOR BATHROOM AND LAUNDRY ROOM EXHAUST FAN CAPACITIES.
L. LUMINAIRES TO BE INSTALLED RECESSED IN INSULATED CEILING SHALL BE APPROVED FOR ZERO CLEARANCE INSULATION COVER (IC) BY A NATIONALLY RECOGNIZED TESTING LABORATORIES RECOGNIZED BY THE INTERNATIONAL CONFERENCE OF BUILDING OFFICIALS.
M. GENERAL LIGHTING USE IN RESIDENTIAL LIVING SPACES AND EXTERIOR LIGHTING LUMINAIRES SHALL BE HIGH EFFICACY TYPE.
N. MOTION SENSORS SHALL BE ALLOWED FOR BATHROOMS, LAUNDRY ROOMS WITH MANUEL-ON AUTO-OFF IF LUMINAIRES ARE NOT HIGH EFFICACY TYPES.
O. DIMMER OR MANUEL-ON OCCUPANCY SENSORS SHALL BE ALLOWED FOR AREAS OTHER THAN KITCHENS, BATHROOMS, LAUNDRY ROOMS, GARAGES, AND UTILITY ROOMS IF LUMINARIES ARE NOT HIGH EFFICACY TYPES.
P. PROVIDE COMPACT FLUORESCENT BULBS AT ALL FIXTURES WHERE FLUORESCENT BULBS ARE NOT ALREADY REQUIRED.
Q. VERIFY ALL TELEPHONE AND CABLE JACK LOCATIONS WITH OWNER PRIOR TO INSTALLATION.
R. VERIFY LOCATION AND POWER REQUIREMENTS FOR HVAC UNIT WITH MECHANICAL CONTRACTOR.
S. IF DURING THE COURSE OF CONSTRUCTION, ANY HAZARDOUS MATERIALS ARE ENCOUNTERED, THE CONTRACTOR SHALL DEMOLISH THE HAZARDOUS MATERIALS IN ACCORDANCE WITH LOCAL STATE AND FEDERAL REGULATIONS.
T. ALL LOCATIONS TO HAVE TAMPER-RESISTANT RECEPTACLES.
U. ALL RECEPTACLES INSTALLED IN DAMP OR WET LOCATIONS TO BE WEATHER RESISTANT.
V. ALL OUTLETS IN ALL ROOMS TO BE ARC-FAULT PROTECTED.
W. ALL OUTLETS IN LOCATIONS AS DESCRIBED IN NEC 210.8 TO BE GFCI PROTECTED.
X. ALL NON-LOCKING-TYPE 125-VOLT, 15- AND 20-AMPERE RECEPTACLES IN LOCATIONS AS DESCRIBED IN NEC 210.52 SHALL BE TAMPER RESISTANT RECEPTACLES.
Y. ELECTRICAL RECEPTACLE OUTLETS, SWITCHES AND CONTROLS (INCLUDING CONTROLS FOR HEATING, VENTILATION AND AIR CONDITIONING) INTENDED TO BE USED BY OCCUPANTS SHALL BE LOCATED NO MORE THAN 48 INCHES MEASURED FROM THE TOP OF THE OUTLET BOX AND NOT LESS THAN 15 INCHES MEASURED FROM THE BOTTOM OF THE OUTLET BOX ABOVE THE FINISH FLOOR.
EXCEPTIONS:
1. DEDICATED RECEPTACLE OUTLETS: FLOOR RECEPTACLE OUTLETS; CONTROLS MOUNTED ON CEILING FANS AND CEILING LIGHTS; AND CONTROLS LOCATED ON APPLIANCES.
2. RECEPTACLE OUTLETS REQUIRED BY THE CALIFORNIA ELECTRICAL CODE ON A WALL SPACE WHERE THE DISTANCE BETWEEN THE FINISHED FLOOR AND A BUILT-IN FEATURE ABOVE THE FINISH FLOOR, SUCH AS A WINDOW, IS LESS THAN 15 I INCHES".

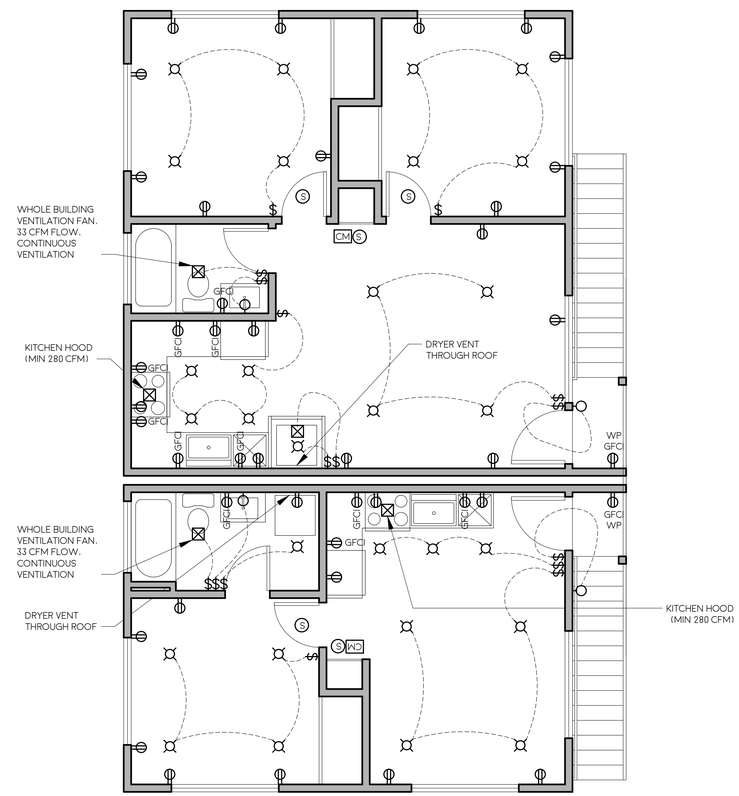

LEVEL 2 ELECTRICAL PLAN | 1

1/4"=1'-0"

LICENSED ARCHITECT
CHRISTOPHER SAWAYA
C35363
REN: 06-30-27
STATE OF CALIFORNIA

SAWAYA ARCHITECTURE

3565 7TH AVENUE
SAN DIEGO, CA 92103
SAWAYAARCHITECTURE.COM
(619) 916 - 8145

IDLEWILD ADUS

3153 IDLEWILD WAY

3153 IDLEWILD WY UNIT 1
3153 IDLEWILD WY UNIT 2
3153 IDLEWILD WY UNIT 3
3153 IDLEWILD WY UNIT 4

SAN DIEGO, CA 92117

DATE	BY	ISSUE DESCRIPTION
03-10-26	CC	SUBMITTAL

SAWAYA ARCHITECTURE

A5.1

LEVEL 2
ELECTRICAL PLAN

2603
PRINT TO SCALE : 24" X 36"

3"=1'-0"

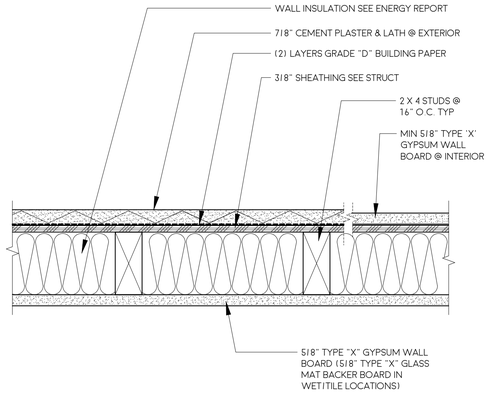

FIRE RATING: 1 HOUR
SOUND RATING: 50-59 STC
UL U-305

TYPICAL 1-HOUR EXTERIOR WALL | 1

3"=1'-0"

NOTE: ALL FIRE-RATED WALLS TO PROVIDE SOLID 2X FIREBLOCKING ABOVE TOP PLATE TO UNDERSIDE OF ROOF OR FLOOR SHEATHING ABOVE.

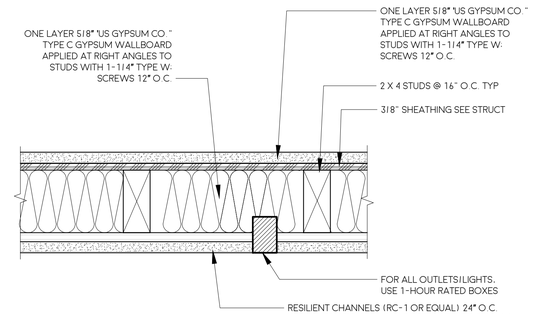

FIRE RATING: 1 HOUR
FIRE TEST: UL R3660, 87RT1694, 11-12-87; UL DESIGN U311
SOUND RATING: 50-59 STC
SOUND TEST: BBN-760903

TYPICAL 1-HOUR INTERIOR WALL | 2

3"=1'-0"

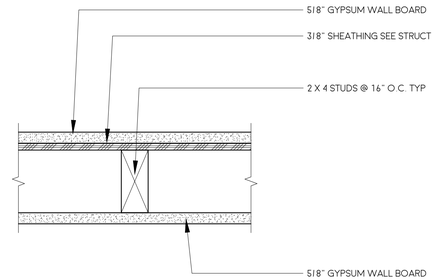

TYPICAL NON-RATED INTERIOR WALL | 3

3"=1'-0"

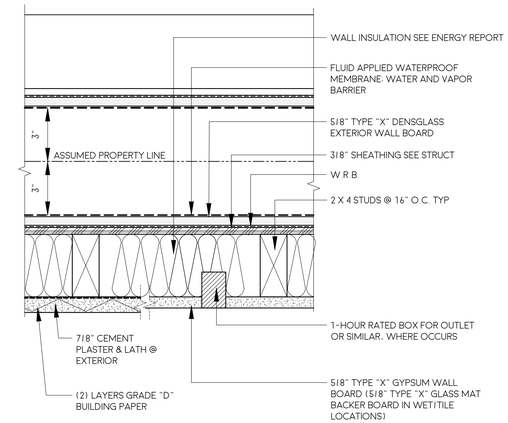

FIRE RATING: 1 HOUR
WP 8105

1-HOUR EXTERIOR WALL AT GAP | 4

3"=1'-0"

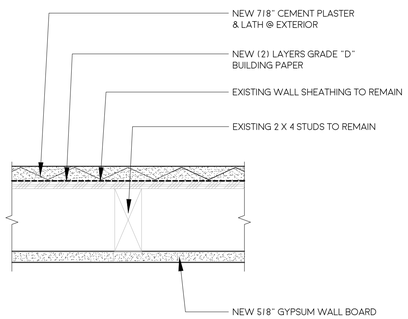

EXISTING EXTERIOR WALL | 5

3"=1'-0"

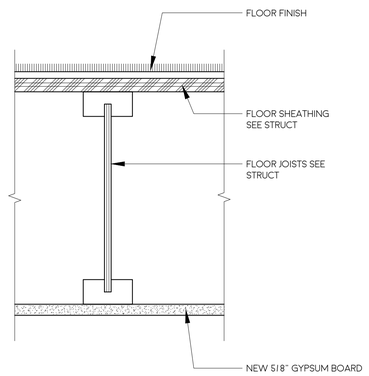

TYPICAL FLOOR | 6

3"=1'-0"

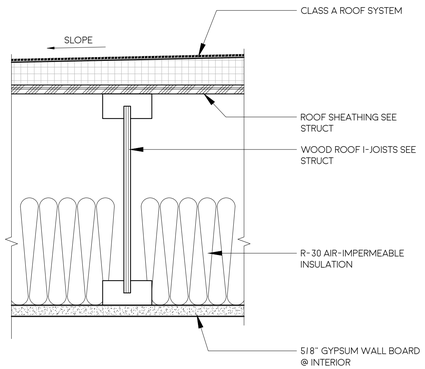

TYPICAL ROOF | 7

3"=1'-0"

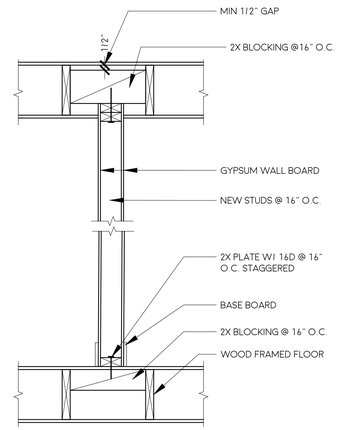

TYP. NON-BEARING WALL TO FRAMING | 8

1"=1'-0"

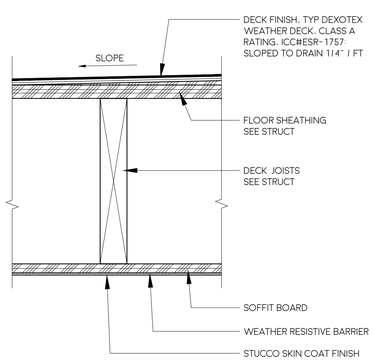

TYPICAL DECK | 9

3"=1'-0"

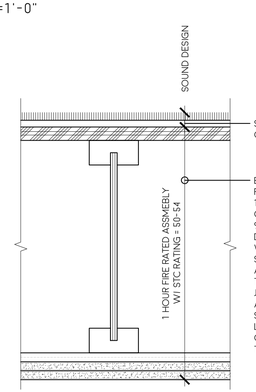

SOUND TESTED WITH 40 OZ CARPET OVER 1/4" FOAM PAD.

BASE LAYER 1/2" TYPE X GYPSUM BOARD APPLIED AT RIGHT ANGLES TO RESILIENT CHANNELS 16" O.C. WITH 1-1/4" TYPE S DRYWALL SCREWS 12" O.C. RESILIENT CHANNELS APPLIED AT RIGHT ANGLES TO MINIMUM 9-1/2" DEEP WOOD I-JOISTS. WITH MINIMUM 1-1/4" DEEP × 1-1/2" WIDE FL ANGES AND MINIMUM 3/8" WEBS. 24" O.C. WITH 1-1/4" TYPE W DRYWALL SCREWS. FACE LAYER 1/2" TYPE X GYPSUM BOARD APPLIED AT RIGHT ANGLES TO CHANNELS WITH 1-5/8" TYPE S DRYWALL SCREWS 12" O.C. FACE LAYER END JOINTS LOCATED MIDWAY BETWEEN CHANNELS AND ATTACHED TO BASE LAYER WITH 1-1/2" TYPE G SCREWS 12" O.C. EDGE JOINTS OFFSET 24" FROM BASE LAYER EDGE JOINTS. WOOD I-JOISTS SUPPORTING 5/8" ORIENTED STRAND BOARD APPLIED AT RIGHT ANGLES TO I-JOISTS WITH 8D COMMON NAILS 12" O.C.

GA FILE NO. FC 5111
FIRE RATING 1 HOUR
FIRE TEST NRCC A-4440.1 (REVISED), 6-24-97
SOUND RATING 50-54 STC
SOUND TEST NRCC B-3150.2, 6-30-00
IIC & TEST (68 C & P)
NRCC B-3150.2, 6-30-00

TYPICAL 1-HOUR FLOOR | 11

3"=1'-0"

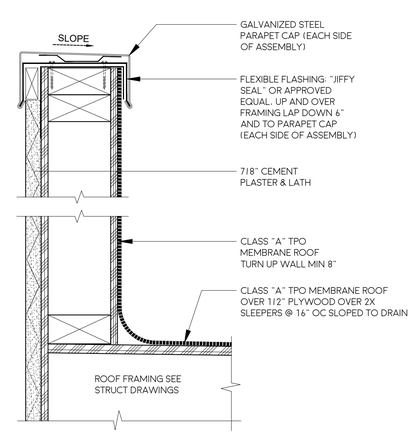

TYPICAL ROOF PARAPET | 10

3"=1'-0"

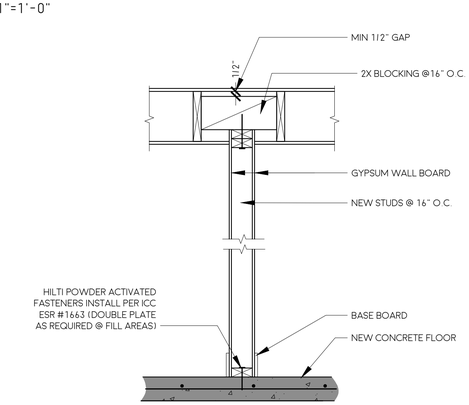

NON-BEARING WALL TO SLAB | 12

1"=1'-0"

LICENSED ARCHITECT
CHRISTOPHER SAWAYA
C35363
REN: 06-30-27
STATE OF CALIFORNIA

SAWAYA ARCHITECTURE

3565 7TH AVENUE
SAN DIEGO, CA 92103
SAWAYAARCHITECTURE.COM
(619) 916 - 8145

IDLEWILD ADUS

3153 IDLEWILD WAY

3153 IDLEWILD WY UNIT 1
3153 IDLEWILD WY UNIT 2
3153 IDLEWILD WY UNIT 3
3153 IDLEWILD WY UNIT 4

SAN DIEGO, CA 92117

DATE	BY	ISSUE DESCRIPTION
03-10-26	CC	SUBMITTAL

SAWAYA ARCHITECTURE

A7.0

DETAILS

2603
PRINT TO SCALE : 24" X 36"

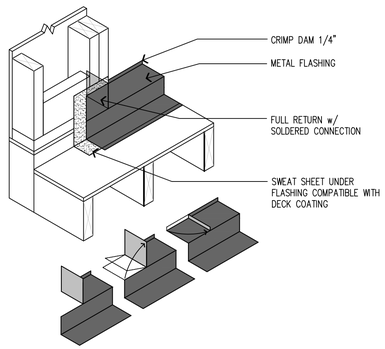

ONE PIECE DOOR PAN FLASHING | 1

1-1/2"=1'-0"

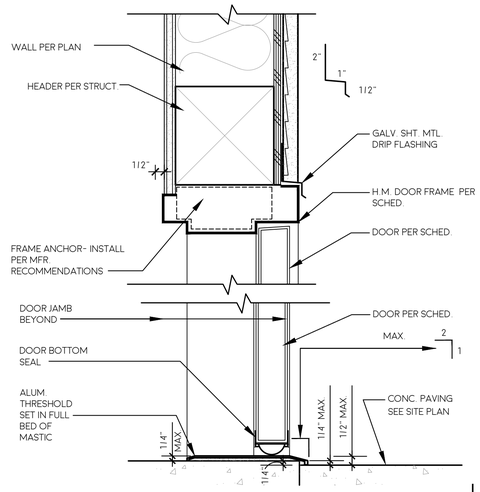

EXTERIOR DOOR | 2

3"=1'-0"

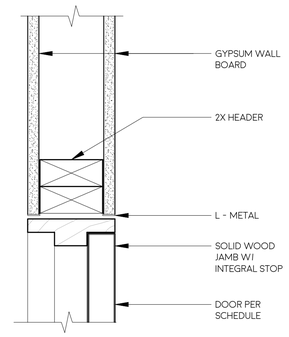

INTERIOR DOOR HEAD | 3

3"=1'-0"

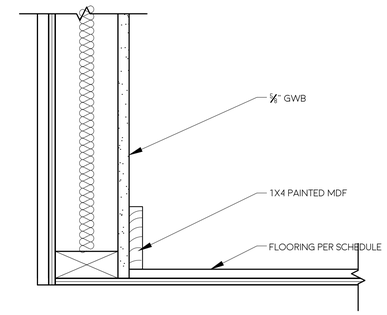

TYPICAL INTERIOR WALL BASE - WOOD | 4

3"=1'-0"

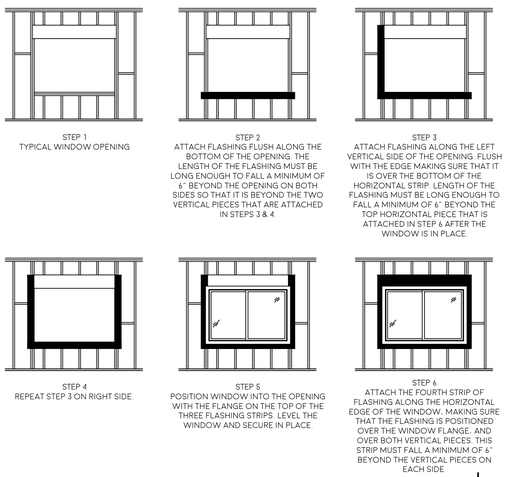

TYPICAL WINDOW FLASHING | 5

NTS

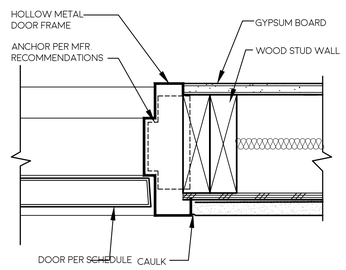

TYPICAL EXTERIOR DOOR JAMB | 6

3"=1'-0"

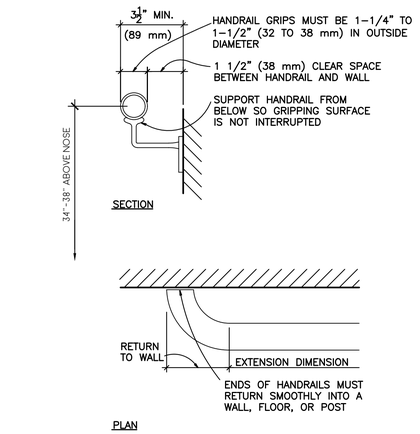

WALL MOUNTED HANDRAIL | 7

3"=1'-0"

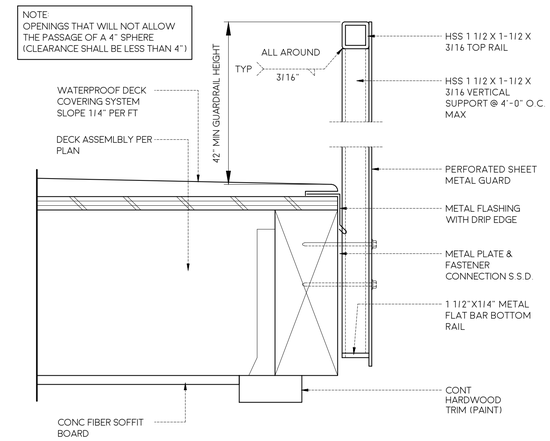

GUARDRAIL | 8

3"=1'-0"

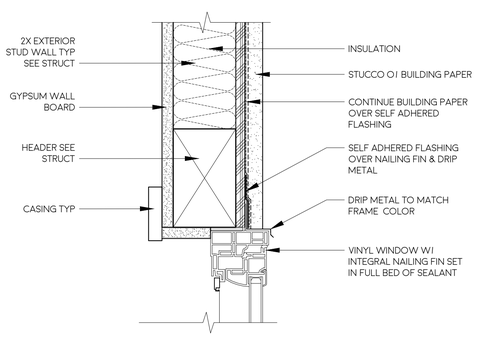

TYPICAL WINDOW HEAD | 9

3"=1'-0"

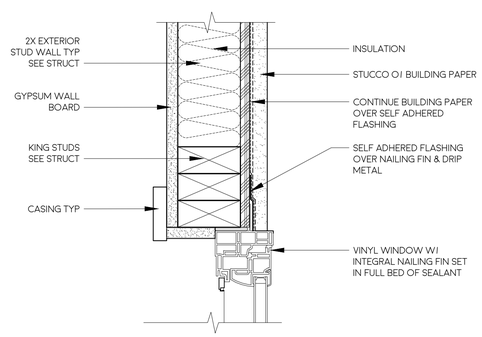

TYPICAL WINDOW JAMB | 10

3"=1'-0"

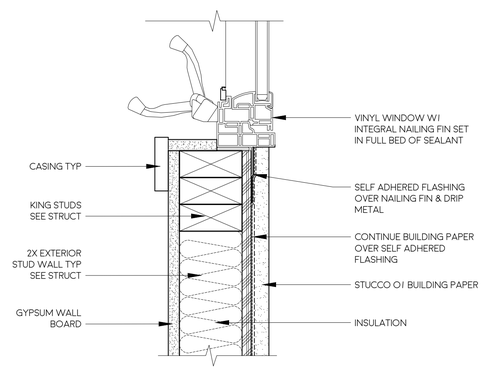

TYPICAL WINDOW SILL | 11

3"=1'-0"

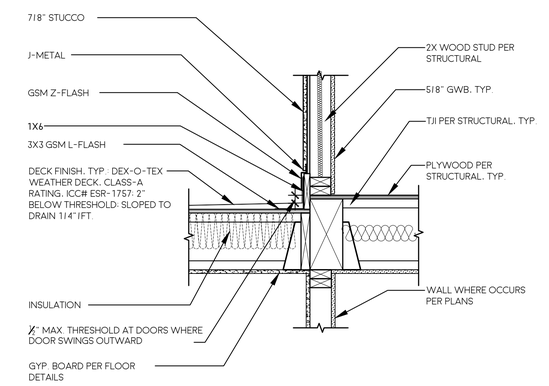

DECK AT EXTERIOR WALL | 12

1-1/2"=1'-0"

LICENSED ARCHITECT
CHRISTOPHER SAWAYA
C35363
REN: 06-30-27
STATE OF CALIFORNIA

SAWAYA ARCHITECTURE

3565 7TH AVENUE
SAN DIEGO, CA 92103
SAWAYAARCHITECTURE.COM
(619) 916 - 8145

IDLEWILD ADUS

3153 IDLEWILD WAY

3153 IDLEWILD WY UNIT 1
3153 IDLEWILD WY UNIT 2
3153 IDLEWILD WY UNIT 3
3153 IDLEWILD WY UNIT 4

SAN DIEGO, CA 92117

DATE	BY	ISSUE DESCRIPTION
03-10-26	CC	SUBMITTAL

SAWAYA ARCHITECTURE

A7.1

DETAILS

2603
PRINT TO SCALE : 24" X 36"

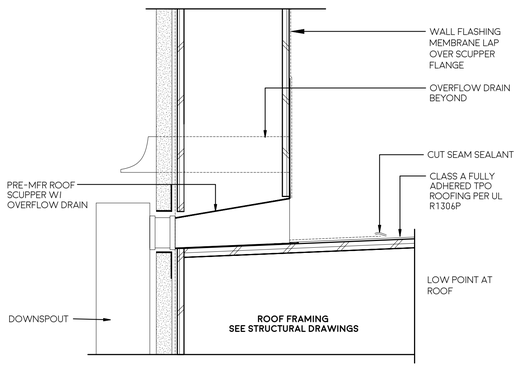

ROOF SCUPPER & OVERFLOW DRAIN | 1

3"=1'-0"

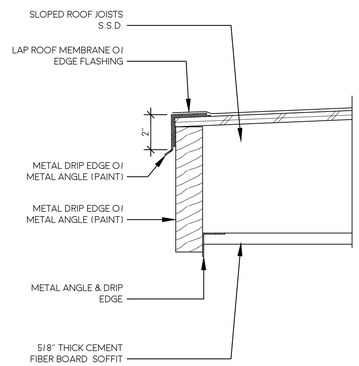

ROOF EDGE FASCIA | 2

3"=1'-0"

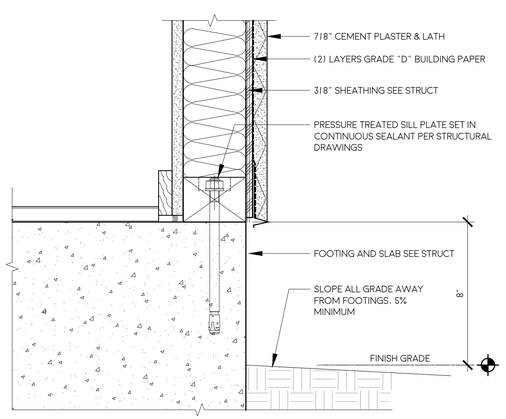

TYPICAL LEVEL 1 WALL BASE | 9

3"=1'-0"

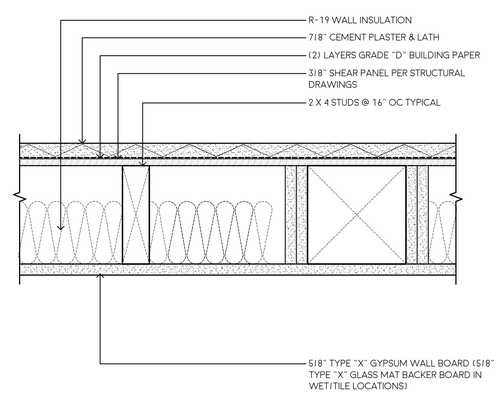

FIRE RATING 1 HOUR
SOUND RATING 50-59 STC
UL U-305

1-HOUR RATED COLUMN IN EXT. WALL - WOOD | 10

3"=1'-0"

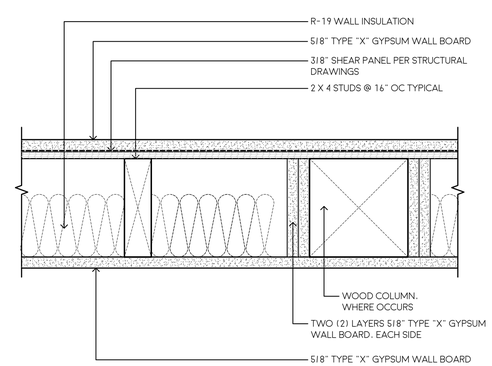

FIRE RATING 1 HOUR
SOUND RATING 50-59 STC
UL U-305

1-HOUR RATED COLUMN IN INT. WALL - WOOD | 11

3"=1'-0"

NOTE: FOR FASTENING. USE SCREWS OR RING SHANK NAILS

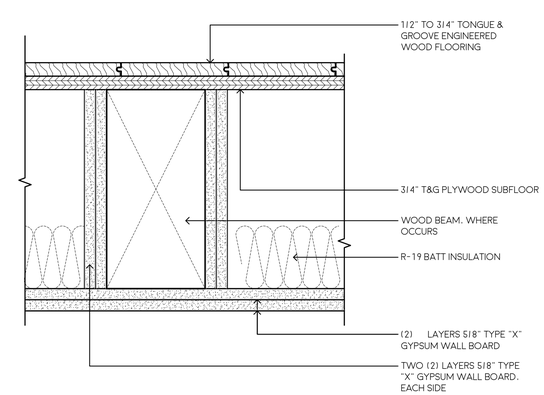

1-HOUR RATED BEAM IN FLOOR - WOOD | 12

3"=1'-0"

LICENSED ARCHITECT
CHRISTOPHER SAWAYA
C35363
REN: 06-30-27
STATE OF CALIFORNIA

SAWAYA ARCHITECTURE

3565 7TH AVENUE
SAN DIEGO, CA 92103
SAWAYAARCHITECTURE.COM
(619) 916 - 8145

IDLEWILD ADUS

3153 IDLEWILD WAY

3153 IDLEWILD WY UNIT 1
3153 IDLEWILD WY UNIT 2
3153 IDLEWILD WY UNIT 3
3153 IDLEWILD WY UNIT 4

SAN DIEGO, CA 92117

DATE	BY	ISSUE DESCRIPTION
03-10-26	CC	SUBMITTAL

SAWAYA ARCHITECTURE

A7.2

DETAILS

2603
PRINT TO SCALE : 24" X 36"

FASTENING SCHEDULE
(CBC TABLE 2304.10.2)

NO.	CONNECTION	FASTENING	LOCATION
	ROOF		
1.a.	BLOCKING BETWEEN CEILING JOISTS, RAFTERS, OR TRUSSES TO TOP PLATE OR OTHER FRAMING BELOW	(3) 8d COMMON	EACH END, TOE NAIL
1.b.	BLOCKING BETWEEN RAFTERS OR TRUSS NOT AT THE WALL TOP PLATE, TO RAFTER OR TRUSS	(2) 8d COMMON	EACH END, TOE NAIL
		(2) 16d COMMON	END NAIL
1.c.	FLAT BLOCKING TO TRUSS AND WEB FILLER	16d @ 6"o.c.	FACE NAIL
2	CEILING JOISTS TO TOP PLATE	(3) 8d COMMON	EACH JOIST, TOE NAIL
3	CEILING JOISTS NOT ATTACHED TO PARALLEL RAFTERS, LAPS OVER PARTITIONS (NO THRUST) (SEE SECTION 2308.7.3.1, TABLE 2308.7.3.1)	(3) 16d COMMON	FACE NAIL
4	CEILING JOIST ATTACHED TO PARALLEL RAFTERS (HEEL JOINT) (SEE SECTION 2308.7.3.1, TABLE 2308.7.3.1)	PER TABLE 2308.7.3.1	FACE NAIL
5	COLLAR TIE TO RAFTER	(3) 10d COMMON	FACE NAIL
6	RAFTER OR ROOF TRUSS TO TOP PLATE (SEE SECTION 2308.7.5, TABLE 2308.7.5)	(3) 10d COMMON	(2) TOE NAIL ON ONE SIDE AND (1) TOENAIL ON OPPOSITE SIDE OF RAFTER OR TRUSS
7	ROOF RAFTERS TO RIDGE, VALLEY, OR HIP RAFTERS; OR ROOF RAFTER TO 2x RIDGE BEAM	(2) 16d COMMON	END NAIL
		(3) 10d COMMON	TOE NAIL
	WALL		
8	STUD TO STUD (NOT AT SHEAR WALLS)	16d COMMON	24"o.c. FACE NAIL
9	STUD TO STUD AND ABUTTING STUDS AT INTERSECTING WALL CORNERS (AT SHEAR WALLS)	16d COMMON	16"o.c. FACE NAIL
10	BUILT-UP HEADER (2" TO 2" HEADER)	16d COMMON	16"o.c. EACH EDGE, FACE NAIL
11	CONTINUOUS HEADER TO STUD	(4) 8d COMMON	TOE NAIL
12	TOP PLATE TO TOP PLATE	16d COMMON	@ 16"o.c. FACE NAIL
13	TOP PLATE TO TOP PLATE, AT END JOINTS	(8) 16d COMMON	FACE NAIL ON EACH SIDE OF END JOINT (MINIMUM 24" LAP SPLICE LENTH EACH SIDE OF END JOINT)
14	BOTTOM PLATE TO JOIST, RIM JOIST, BAND JOIST, OR BLOCKING (NOT AT SHEAR WALLS)	16d COMMON	16"o.c. FACE NAIL
15	BOTTOM PLATE TO JOIST, RIM JOIST, BAND JOIST, OR BLOCKING AT SHEAR WALL PANELS	(2) 16d COMMON	16"o.c. FACE NAIL
16	STUD TO TOP OR BOTTOM PLATE	(4) 8d COMMON	TOE NAIL
		(2) 16d COMMON	END NAIL
17	TOP PLATES, LAPS AT CORNERS AND INTERSECTIONS	(2) 16d COMMON	FACE NAIL
18	1" BRACE TO EACH STUD AND PLATE	(2) 8d COMMON	FACE NAIL
19	1" x 6" SHEATHING TO EACH BEARING	(2) 8d COMMON	FACE NAIL
20	1" x 8" AND WIDER SHEATHING TO EACH BEARING	(3) 8d COMMON	FACE NAIL
	FLOOR		
21	JOIST TO SILL, TOP PLATE, OR GIRDER	(3) 8d COMMON	TOE NAIL
22	RIM JOIST, BAND JOIST, OR BLOCKING TO TOP PLATE, SILL, OR OTHER FRAMING BELOW	8d COMMON	6"o.c., TOE NAIL
23	1" x 6" SUBFLOOR OR LESS TO EACH JOIST	(2) 8d COMMON	FACE NAIL
24	2" SUBFLOOR TO JOIST OR GIRDER	(2) 16d COMMON	BLIND AND FACE NAIL
25	2" PLANKS (PLANK AND BEAM - FLOOR AND ROOF)	(2) 16d COMMON	EACH BEARING, FACE NAIL
26	BUILT-UP GIRDERS AND BEAMS, 2" LUMBER LAYERS	20d COMMON	32"o.c., FACE NAIL T&B, STAGGERED, OPP SIDES
		AND (2) 20d COMMON	ENDS AND AT EACH SPLICE, FACE NAIL
27	LEDGER STRIP SUPPORTING JOISTS OR RAFTERS	(3) 16d COMMON	EACH JOIST OR RAFTER, FACE NAIL
28	JOIST TO BAND JOIST OR RIM JOIST	(3) 16d COMMON	END NAIL
29	BRIDGING OR BLOCKING TO JOIST, RAFTER, OR TRUSS	(2) 8d COMMON	EACH END, TOE NAIL

NOTES:

1. THE NUMBER AND SIZE OF FASTENERS SHOWN ABOVE ARE MINIMUM REQUIREMENTS. IF OTHER NOTES AND/OR DETAILS ON THE DRAWINGS REQUIRE MORE AND/OR LARGER FASTENERS, THE OTHER NOTES AND/OR DETAILS SHALL GOVERN.
2. WHEN POSSIBLE, NAILS DRIVEN PERPENDICULAR TO GRAIN SHALL BE USED INSTEAD OF TOENAILS.
3. SEE TABLE 2304.10.2 OF THE 2022 CBC FOR ADDITIONAL NOTES, REQUIREMENTS OR OPTIONS.

STATEMENT OF SPECIAL INSPECTION

THE FOLLOWING SPECIAL INSPECTIONS ARE REQUIRED TO BE PERFORMED AS SPECIFIED:

INSPECTION	FREQUENCY	
SOILS		CBC 1705.6
SEE SEPARATE TABLE BELOW	VARIES	
CONCRETE		
NOT REQUIRED	VARIES	SEE EXCEPTION

EXCEPTION: CBC 1705.3

SPECIAL INSPECTIONS ARE NOT REQUIRED PER CBC 1705.3 FOR:

1. ISOLATED SPREAD CONCRETE FOOTINGS OF BUILDINGS THREE STORIES OR LESS ABOVE GRADE PLANE THAT ARE FULLY SUPPORTED ON EARTH OR ROCK.
2. CONTINUOUS CONCRETE FOOTINGS SUPPORTING WALLS OF BUILDINGS THREE STORIES OR LESS ABOVE GRADE PLANE THAT ARE FULLY SUPPORTED ON EARTH OR ROCK WHERE:
   - 2.1 THE FOOTINGS SUPPORT WALLS OF LIGHT-FRAME CONSTRUCTION.
   - 2.2 THE STRUCTURAL DESIGN OF THE FOOTING IS BASED ON A SPECIFIED COMPRESSIVE STRENGTH, F 'C, NOT MORE THAN 2,500 PSI, REGARDLESS OF THE COMPRESSIVE STRENGTH SPECIFIED IN THE APPROVED CONSTRUCTION DOCUMENTS OR USED IN THE FOOTING CONSTRUCTION.
3. NONSTRUCTURAL CONCRETE SLABS SUPPORTED DIRECTLY ON THE GROUND, INCLUDING PRESTRESSED SLABS ON GRADE, WHERE THE EFFECTIVE PRESTRESS IN THE CONCRETE IS LESS THAN 150 PSI.
4. CONCRETE PATIOS, DRIVEWAYS AND SIDEWALKS, ON GRADE.

STRUCTURAL WOOD		CBC 1705.12.1 & 1705.13.2
SPECIAL INSPECTION IS REQUIRED FOR NAILING, BOLTING, ANCHORING AND OTHER FASTENING OF ELEMENTS OF THE SEISMIC FORCE-RESISTING SYSTEM, INCLUDING WOOD SHEAR WALLS, WOOD DIAPHRAGMS, DRAG STRUTS, BRACES, SHEAR PANELS AND HOLD-DOWNS.	PERIODIC	SEE EXCEPTION
SPECIAL INSPECTION SHALL BE REQUIRED DURING FIELD GLUING OPERATIONS OF ELEMENTS OF THE SEISMIC FORCE-RESISTING SYSTEM.	CONTINUOUS	SEE EXCEPTION

EXCEPTION:

SPECIAL INSPECTIONS ARE NOT REQUIRED FOR WOOD SHEAR WALLS, SHEAR PANELS AND DIAPHRAGMS, INCLUDING NAILING, BOLTING, ANCHORING AND OTHER FASTENING TO OTHER ELEMENTS OF THE SEISMIC FORCE-RESISTING SYSTEM, WHERE THE LATERAL RESISTANCE IS PROVIDED BY STRUCTURAL SHEATHING, AND THE SPECIFIED FASTENER SPACING AT THE PANEL EDGES IS MORE THAN 4 INCHES (102 MM) ON CENTER.

POST INSTALLED ANCHORS		
INSPECT INSTALLATION OF POST-INSTALLED ANCHORS	PERIODIC	AS SPECIFIED BY MANUFACTURER IN CODE LISTED REPORT
TEST POST INSTALLED ANCHORS	CONTINUOUS	

1. NOTICE TO THE OWNER: BY USING THIS PERMITTED CONSTRUCTION DRAWINGS FOR CONSTRUCTION/INSTALLATION OF THE WORK SPECIFIED HEREIN, YOU AGREE TO COMPLY WITH THE REQUIREMENT OF THE CITY OF HAVING JURISDICTION FOR SPECIAL INSPECTIONS, CONSTRUCTION OBSERVATIONS, CONSTRUCTION MATERIAL TESTING AND OFF-SITE FABRICATION OF BUILDING COMPONENTS, CONTAINED IN THE STATEMENT OF SPECIAL INSPECTIONS AND AS REQUIRED BY THE CALIFORNIA CONSTRUCTION CODES.
2. NOTICE TO THE CONTRACTOR/OWNER-BUILDER: BY USING THIS PERMITTED CONSTRUCTION DRAWINGS FOR CONSTRUCTION/INSTALLATION OF THE WORK SPECIFIED HEREIN, YOU ACKNOWLEDGE AND ARE AWARE OF THE REQUIREMENTS CONTAINED IN THE STATEMENT OF SPECIAL INSPECTIONS. YOU AGREE TO COMPLY WITH THE REQUIREMENT OF THE CITY HAVING JURISDICTION FOR SPECIAL INSPECTIONS, CONSTRUCTION OBSERVATIONS, CONSTRUCTION MATERIAL TESTING AND OFF-SITE FABRICATION OF BUILDING COMPONENTS, CONTAINED IN THE STATEMENT OF SPECIAL INSPECTIONS AND AS REQUIRED BY THE CALIFORNIA CONSTRUCTION CODES.
3. THE SPECIAL INSPECTOR MUST BE REGISTERED BY THE CITY OF HAVING JURISDICTION, DEVELOPMENT SERVICES, IN THE CATEGORY OF WORK REQUIRED TO HAVE SPECIAL INSPECTION.
4. THE CONSTRUCTION MATERIALS TESTING LABORATORY MUST BE APPROVED BY THE CITY OF HAVING JURISDICTION, DEVELOPMENT SERVICES, FOR TESTING OF MATERIALS, SYSTEMS, COMPONENTS AND EQUIPMENT.
5. OFFSITE FABRICATOR MUST BE APPROVED BY THE CITY OF HAVING JURISDICTION, DEVELOPMENT SERVICES FOR THE FABRICATION OF MEMBERS AND ASSEMBLIES ON THE PREMISES OF THE FABRICATOR'S SHOP.
6. OFFSITE FABRICATOR SHALL SUBMIT AN 'APPLICATION TO PERFORM OFF-SITE FABRICATION' TO THE INSPECTION SERVICES DIVISION FOR APPROVAL PRIOR TO COMMENCEMENT OF FABRICATION.
7. OFFSITE FABRICATOR SHALL SUBMIT AN 'CERTIFICATE OF COMPLIANCE FOR OFF-SITE FABRICATION' TO THE INSPECTION SERVICES DIVISION PRIOR TO ERECTION OF FABRICATED ITEMS AND ASSEMBLIES.
8. THE SPECIAL INSPECTIONS IDENTIFIED ON PLANS ARE, IN ADDITION TO, AND NOT A SUBSTITUTE FOR, THOSE INSPECTIONS REQUIRED TO BE PERFORMED BY A CITY'S BUILDING INSPECTOR.

ROOF TRUSS DESIGN CRITERIA:

1. PREFABRICATED METAL-PLATE-CONNECTED WOOD TRUSSES MUST BE IN ACCORDANCE WITH THE AMERICAN FOREST AND PAPER ASSOCIATION (AF&PA) "NATIONAL DESIGN SPECIFICATION FOR WOOD CONSTRUCTION", THE TRUSS PLATE INSTITUTE (TPI) "NATIONAL DESIGN STANDARDS FOR METAL-PLATE-CONNECTEDWOOD TRUSS CONSTRUCTION" AND CBC 2303.4.
2. SUBMIT SHOP DRAWINGS SIGNED AND SEALED BY A LICENSED PROFESSIONAL ENGINEER RESPONSIBLE FOR THE DESIGN OF PREFABRICATED METAL-PLATE-CONNECTED WOOD TRUSSES. SHOP DRAWINGS MUST INCLUDE DESIGN LOADINGS AND REACTIONS APPLIED TO THE SUPPORTING STRUCTURE.
3. WOOD TRUSS FRAMING MEMBERS MUST COMPLY WITH PS 20 "AMERICAN SOFTWOOD LUMBER STANDARD" AND MUST BE SIZED BY THE MANUFACTURER FOR THE LOADS INDICATED.
4. VERIFY AND COORDINATE ALL TRUSS PROFILES, SLOPES, AND DIMENSIONS WITH ARCHITECTURAL DRAWINGS.
5. METAL CONNECTOR PLATES MUST COMPLY WITH ASTM A653, GRADE A WITH COATING AS SPECIFIED.
6. ALL WOOD TRUSSES SHALL HAVE 2X4 OR 2X6 TOP CHORDS, UNLESS NOTED OTHERWISE. INCREASE TRUSS PLYS TO MAINTAIN SPECIFIED CHORD SIZE AS NECESSARY. IF TRUSS DESIGN PARAMETERS CANNOT BE ACHIEVED WITH 2X4 TOP CHORDS, NOTIFY THE ARCHITECT.
7. WOOD TRUSS DESIGN LOADS MUST BE AS INDICATED IN "STRUCTURAL DESIGN CRITERIA " AND AS FOLLOWS:
   - A. TOP CHORD DEAD AND LIVE LOAD: 14 PSF AND 20 PSF RESPECTIVELY
   - B. BOTTOM CHORD DEAD AND LIVE LOAD: 6 PSF AND 0 PSF RESPECTIVELY
   - C. WIND LOAD: 10PSF UPLIFT (ASD). NOTE, WHEN CALCULATING NET UPLIFT REACTIONS, USE MAXIMUM RESISTING DEAD LOAD = 6 PSF ON TOP CHORD AND 0 PSF ON BOTTOM CHORD.
8. DEFLECTION CRITERIA: TOTAL (D + L) DEFLECTION < L/180, LIVE DEFLECTION < L/180 BUT ALSO SHALL NOT EXCEED 1".
9. WHERE MULTIPLE TRUSSES ARE INDICATED, SCAB CONTINGENT TRUSS MEMBERS TOGETHER WITH 16d NAILS AT 12 INCHES ON CENTER.
10. IN ADDITION TO THE TRUSS BRACING SHOWN, THE CONTRACTOR MUST PROVIDE ALL TEMPORARY AND PERMANENT BRACING AS REQUIRED FOR SAFE ERECTION OF THE TRUSSES.
11. THE ROOF TRUSS MANUFACTURER SHALL PROVIDE ALL BRIDGING, BLOCKING, HEADERS AND HARDWARE ETC. REQUIRED APART OF TRUSS DESIGN.
12. GT DENOTES GIRDER TRUSS. DT DENOTES DRAG TRUSS. RT DENOTES ROOF TRUSS. SAL DENOTES SEISMIC AXIAL LOAD (ASD).

DEFERRED SUBMITTALS:

DEFERRED SUBMITTALS ARE THOSE PORTIONS OF THE DESIGN THAT ARE NOT SUBMITTED AT THE TIME OF PERMIT APPLICATION AND THAT ARE TO BE SUBMITTED TO THE PERMITTING AGENCY FOR ACCEPTANCE PRIOR TO INSTALLATION OF THAT WORK.

SUBMITTALS SHALL INCLUDE SHOP DRAWINGS AND STRUCTURAL CALCULATIONS STAMPED AND SIGNED BY A CIVIL OR STRUCTURAL ENGINEER WHO IS LICENSED IN THE STATE OF CALIFORNIA AND PROFICIENT IN THE WORK BEING PERFORMED. THE DRAWINGS AND CALCULATIONS SHALL BE SUBMITTED TO THE ARCHITECT AND STRUCTURAL ENGINEER FOR REVIEW AND APPROVAL PRIOR TO BEING SUBMITTED TO THE BUILDING DEPARTMENT FOR PERMITTING.

1. ROOF TRUSSES.

ABBREVIATIONS:

BLKG	BLOCKING
B.N.	BOUNDARY NAIL
CJ	CONTROL JOINT OR CEILING JOIST
CLG	CEILING
CMU	CONCRETE MASONRY UNIT
CONC	CONCRETE
CONT	CONTINUOUS
DBL	DIAMETER
DIA	DOUBLE
DN	DOWN
DWG	DRAWING
E.N.	EDGE NAIL
EQ	EQUAL
FLR	FLOOR
F.N.	FIELD NAIL
FRMG	FRAMING
FT	FLOOR TRUSS
FTG	FOOTING
HDR	HEADER
JS	JACK STUD
KP	KING POST
KS	KING STUD
LVL	LAMINATED VENEER LUMBER
MANUF	MANUFACTURER
PSL	PARALLEL STRAND LUMBER
PT	PRESERVATIVE TREATED
RT	ROOF TRUSS
SHTG	SHEATHING
SIM	SIMILAR
T.N.	TOE NAIL
TYP	TYPICAL
UON	UNLESS OTHERWISE NOTED
WSP	WOOD STRUCTURAL PANEL

LUMBER NOTES:

1. ALL STRUCTURAL LUMBER SHALL BE DOUGLAS FIR-LARCH AND GRADED BY W.C.L.A OR W.W.P.A.
2. STRUCTURAL MEMBERS SHALL BE OF THE FOLLOWING (MINIMUM) GRADES UNLESS OTHERWISE NOTED:

USEAGE	MIN GRADE	Fb, MIN
STUDS, PLATES AND BLOCKING	No. 2	900 PSI
≥ 6" WIDE BEAMS, POSTS AND MULLIONS	SEL STRUCT	1,500 PSI
≤ 4" WIDE BEAMS, POSTS AND MULLIONS	NO. 1 & BTR	1,200 PSI
JOISTS AND RAFTERS (2X6 AND LARGER)	NO. 1 & BTR	1,200 PSI
(2X4 AND 3X4)	NO. 1 & BTR	1,200 PSI
SILL PLATES: PRESERVATIVE TREATED	NO. 1	1,000 PSI

3. LAMINATED VENEER LUMBER (VERSA LAM) AS MANUFACTURED BY BOISE CASCADE SHALL HAVE THE FOLLOWING MINIMUM PROPERTIES PER ICC ESR-1040:

TYPE	PRODUCT GRADE	Fb, MIN	E (TRUE)
BEAMS 3 1/2" AND WIDER	2.1E 3100	3,100 PSI	2,100 KSI
1 3/4" WIDE BEAM/JOIST	2.1E 2800	2,800 PSI	2,100 KSI
1 1/2" WIDE RIM BOARD	2,400 PSI	2,400 PSI	2,100 KSI

4. PREFABRICATED WOOD-I JOISTS SHALL BE PER BOISE CASCADE (ICC ESR-1336).
5. ALL WOOD BEARING ON CONCRETE OR MASONRY WITHIN 4'-0" FROM GRADE SHALL BE PRESERVATIVE TREATED DOUGLAS FIR.
6. ALL WOOD STRUCTURAL PANELS (PLYWOOD OR OSB SHEATHING) SHALL BE EXPOSURE 1, APA RATED STRUCTURAL SHEATHING COMPLYING WITH EITHER DOC PS 1 OR DOC PS 2. WOOD STRUCTURAL PANELS (WSP) AT FLOORS SHALL HAVE EXTERIOR GLUE CONFORMING TO PS 1-19.
7. STRUCTURAL MEMBERS SHALL NOT BE CUT FOR PIPES, ETC. UNLESS SPECIFICALLY NOTED OR DETAILED.
8. PROVIDE CONTINUOUS 2X SOLID BLOCKING BETWEEN JOISTS OR RAFTERS AT ALL SUPPORTS, EXCEPT AT SUPPORT W/ LEDGER W/ HANGER.
9. PROVIDE SOLID BLOCKING OR CROSS-BRIDGING AT 8'-0"o.c. MAX. FOR ALL SOLID LUMBER FLOOR JOISTS OVER (4") DEEP & AT 10'-0"o.c. MAX. FOR ALL SOLID LUMBER RAFTERS OVER (8") DEEP. LOCATE FIRST BLOCK AT MID-SPAN.
10. AT HORIZONTAL WOOD STRUCTURAL PANELS SHEATHING, NO PANEL SHALL BE LESS THAN 24" WIDE. AT VERTICAL WOOD STRUCTURAL PANELS , NO PANEL SHALL BE LESS THAN 12" WIDE.
11. ALL BOLTS BEARING ON WOOD SHALL HAVE STANDARD CUT WASHERS UNDER HEAD & NUT, UNLESS NOTED OTHERWISE.
12. ALL JOIST HANGERS SHALL BE "SIMPSON" OR APPROVED EQUAL & SHALL MATCH SUPPORTED MEMBER SIZE UNLESS OTHERWISE SHOWN ON DRAWINGS. THEY SHALL BE INSTALLED FOR MAX. RATED LOADS.
13. PROVIDE 2X FIRE STOPS AT ALL INTERSECTIONS OF STUD WALLS AND/OR STUD PARTITIONS AT FLOOR, CEILING & ROOF. FIRE STOPS AT A MAX. SPACING OF 8'-0"o.c. IN THE VERTICAL DIRECTION, PROVIDE 2X FIRE STOPS IN ALL FURRED SPACES, VERTICAL & HORIZONTAL.
14. ALL BOLT HOLES SHALL BE DRILLED 1/32" TO 1/16" OVERSIZED (12.1.3.2, 2018 NDS). A STANDARD CUT WASHER OR METAL PLATE/STRAP OR EQUAL OR GREATER DIMENSIONS SHALL BE PROVIDED BETWEEN THE WOOD AND NUT.
15. NAILING FOR PLYWOOD SHEATHING SHALL BE 10d PLYWOOD NAILS, 2-1/2" X #9 GAGE x 9/ 32" DIAMETER HEAD BARBED SHANK, EQUIVALENT.
16. MACHINE APPLIED NAILING SHALL BE CALIBRATED TO THE SPECIFIC PROJECT CONDITIONS. IF NAILHEADS PENETRATE THE OUTER PLY MORE THAN WOULD BE NORMAL FOR A HAND HAMMER OR IF MINIMUM ALLOWABLE EDGE DISTANCES ARE NOT MAINTAINED, THE PERFORMANCE WILL BE DEEMED UNSATISFACTORY.
17. ALL NAILS SHALL BE COMMON WIRE NAILS AND SHALL COMPLY TO ASTM F1667.
18. ALL NAILING SHALL COMPLY WITH CBC TABLE 2304.10.2 & SECTION 2303.6 UNLESS OTHERWISE NOTED.
19. ALL LUMBER SHALL HAVE A MAXIMUM MOISTURE CONTENT OF 19% (DRY) LUMBER.
20. WHERE JOISTS ARE SUPPORTING MECHANICAL EQUIPMENT AND ARCHITECTURAL FEATURES, CONSULT MECHANICAL AND ARCHITECTURAL DRAWINGS FOR EQUIPMENT AND FEATURE LOADS.
21. PRE-DRILL HOLES AS NEEDED FOR ANY SIZE NAIL TO AVOID SPLITTING WOOD FRAMING MEMBERS.
22. NO SHOT PIN IS ALLOWED AT CURBS & EDGE OF SLABS.
23. RETIGHTEN BOLTS (HAND TIGHTENING IS NOT ALLOWED) BEFORE CLOSING IN.
24. EXTERIOR USE NAILS SHALL BE OF HOT-DIPPED ZINC-COATED GALVANIZED STEEL, MECHANICALLY DEPOSIT ZINC-COATED STEEL, STAINLESS STEEL, SILICON BRONZE OR COPPER.
25. ALL FASTENERS IN CONTACT WITH PRESERVATIVE-TREATED WOOD & FIRE RETARDANT TREATED WOOD SHALL BE OF HOT-DIPPED ZINC-COATED GALVANIZED STEEL, STAINLESS STEEL, SILICON BRONZE OR COPPER.
26. ALL COUNTERSUNK INTO SAWN LUMBER FOR BOLT & LAG BOLT SHALL NOT BE MORE THAN THE HEIGHT OF BOLT NUT PLUS THICKNESS OF PLATE WASHER

FOUNDATION NOTES:

1. THE NATIVE SOILS HAVE BEEN ASSUMED TO BE CLAY, SANDY-CLAY OR SILTY-CLAY. PRESUMPTIVE SOIL VALUES HAVE BEEN ASSUMED FOR THIS PROJECT, SEE CRC SECTION R401.4.1.
2. THE ALLOWABLE PASSIVE SOIL BEARING PRESSURE IS 1500psf BASED ON TABLE R401.4.1.
3. FOOTINGS SHALL EXTEND TO A MINIMUM DEPTH OF 1'-6" BELOW LOWEST ADJACENT SOIL GRADE.
4. WHERE THE BUILDING OFFICIAL HAS REASON TO DOUBT THE CLASSIFICATION, STRENGTH OF COMPRESSIBILITY OF THE SOIL, THE BUILDING OFFICIAL SHALL BE PERMITTED TO REQUIRE THAT A GEOTECHNICAL INVESTIVATION BE CONDUCTED.

CITY OF SAN DIEGO SOILS NOTES:

1. THE STRUCTURE(S) WILL BE LOCATED ENTIRELY ON UNDISTURBED NATIVE SOIL.
2. AS A CALIFORNIA LICENSED ENGINEER, I HAVE CLASSIFIED THE UNDISTURBED NATIVE SOILS TO BE SILTY CLAY AND PER TABLE 1806.2 OF THE 2022 CBC I HAVE ASSIGNED A FOUNDATION PRESSURE OF 1500 PSF. FOR THE DESIGN OF FOUNDATIONS RELATED TO THIS PROJECT.
3. IF THE BUILDING INSPECTOR SUSPECTS FILL, EXPANSIVE SOILS OR ANY GEOLOGIC INSTABILITY BASED UPON OBSERVATION OF THE FOUNDATION EXCAVATION, A SOILS OR GEOLOGICAL REPORT, AND RESUBMITTAL OF PLANS TO PLAN CHECK TO VERIFY THAT REPORT RECOMMENDATIONS HAVE BEEN INCORPORATED, MAY BE REQUIRED.

SIGNATURE: ____________________
ENGINEER OF RECORD

GENERAL NOTES:

1. THE CONTRACTOR SHALL VERIFY ALL DIMENSIONS PRIOR TO STARTING CONSTRUCTION. DO NOT SCALE THE DRAWINGS, SCALED DIMENSIONS AND GRAPHICALLY SHOWN LOCATIONS ARE TO BE CONSIDERED ONLY APPROXIMATE. THE ENGINEER SHALL BE NOTIFIED OF ANY DISCREPANCIES OR INCONSISTENCIES. IN CASE OF CONFLICT, MORE COSTLY REQUIREMENTS GOVERN FOR BIDDING. SUBMIT CLARIFICATION REQUEST PRIOR TO PROCEEDING WITH WORK.
2. ALL DRAWINGS ARE CONSIDERED TO BE A PART OF THE CONTRACT DOCUMENTS. THE CONTRACTORS SHALL BE RESPONSIBLE FOR THE REVIEW AND COORDINATION OF ALL DRAWINGS AND SPECIFICATIONS PRIOR TO THE START OF CONSTRUCTION. ANY DISCREPANCIES THAT OCCUR SHALL BE BROUGHT TO THE ATTENTION OF THE ENGINEER PRIOR TO START OF CONSTRUCTION SO THAT A CLARIFICATION CAN BE ISSUED. ANY DEVIATION FROM THE APPROVED SET OF CONTRACT DOCUMENTS SHALL ONLY BE MADE AFTER WRITTEN APPROVAL BY THE ENGINEER OF RECORD. ANY WORK PERFORMED IN CONFLICT WITH THE CONTRACT DOCUMENTS OR ANY CODE REQUIREMENTS SHALL BE CORRECTED BY THE CONTRACTOR AT THEIR OWN EXPENSE.
3. NOTES AND DETAILS ON DRAWINGS SHALL TAKE PRECEDENCE OVER GENERAL NOTES AND TYPICAL DETAILS, WHERE NO DETAILS ARE GIVEN, CONSTRUCTION SHALL BE AS SHOWN FOR SIMILAR WORK. UNLESS NOTED OTHERWISE, DETAILS IN STRUCTURAL DRAWINGS ARE TYPICAL AS INDICATED BY CUTS, REFERENCES OR TITLES.
4. NO PIPES, DUCTS, SLEEVES, CHASES, ETC. SHALL BE PLACED IN SLABS, BEAMS OR WALLS, NOR SHALL ANY STRUCTURAL MEMBER BE CUT FOR PIPES, DUCTS, ETC. WITHOUT PRIOR WRITTEN APPROVAL BY THE ENGINEER OF RECORD.
5. THE CONSTRUCTION STRUCTURAL DRAWINGS REPRESENT THE FINISHED STRUCTURE. THEY DO NOT INDICATE THE METHOD OF CONSTRUCTION. THE CONTRACTOR SHALL PROVIDE ALL MEASURES NECESSARY TO PROTECT THE STRUCTURE DURING CONSTRUCTION. SUCH MEASURES SHALL INCLUDE, BUT NOT BE LIMITED TO, BRACING, SHORING FOR LOADS DUE TO CONSTRUCTION EQUIPMENT, ETC. OBSERVATION VISITS TO THE SITE BY THE STRUCTURAL ENGINEER SHALL NOT INCLUDE INSPECTION OF THE ABOVE ITEMS.
6. CONSTRUCTION MATERIAL SHALL BE SPREAD OUT IF PLACED ON FRAMED ROOF OR FLOOR. LOAD SHALL NOT EXCEED THE DESIGN LIVE LOAD PER SQUARE FOOT. PROVIDE ADEQUATE SHORING AND/OR BRACING WHERE THE STRUCTURE HAS NOT ATTAINED DESIGN STRENGTH.

STRUCTURAL DESIGN CRITERIA:

DESIGN CODE: 2025 CRC

DESIGN LOADS:

ROOF:	DL = 16 PSF	RLL = 20 PSF
FLOOR:	DL = 20 PSF	LL = 40 PSF
DECK:	DL = 20 PSF	LL = 60 PSF

WIND DESIGN CRITERIA:

BASIC DESIGN WIND SPEED:	96 MPH (LRFD)
RISK CATEGORY:	II
WIND EXPOSURE:	B
INTERNAL PRESSURE COEFFICIENT:	0.18

SEISMIC DESIGN CRITERIA:

RISK CATEGORY:	II
IMPORTANCE FACTOR	1.0
SITE CLASS:	D (DEFAULT)
SEISMIC DESIGN CATEGORY:	D

S_S = 1.490 S_1 = 0.460
S_{DS} = 1.06 S_{D1} = 0.740

C_S = 0.163

BASIC FORCE RESISTING SYSTEM:
LIGHT-FRAMED WOOD SHEARWALL (R = 6.5)
DESIGN PROCEDURE:
EQUIVALENT LATERAL FORCE PROCEDURE (ASCE 7-16)

CONCRETE NOTES:

1. ALL CONCRETE SHALL CONFORM TO THE REQUIREMENTS OF ACI 301, EXCEPT AS MODIFIED BY THESE NOTES AND THE 2022 CALIFORNIA BUILDING CODE.
2. MINIMUM CONCRETE COMPRESIVE STRENGTH AT 28 DAYS SHALL BE AS FOLLOWS:

	STRENGTH	W/C	SLUMP
FOUNDATION	f'c = 2,500 psi	0.45	4"
SLAB ON GRADE	f'c = 4,000 psi	0.45	4"

3. CEMENT SHALL CONFORM TO ASTM (C-150) TYPE II/V (MAXIMUM 15% FLYASH REPLACEMENT MAY BE USED, ASTM C618 & CLASS N OR F).
4. AGGREGATES SHALL CONFORM TO ASTM C-33 FOR NORMAL WEIGHT CONCRETE AND ASTM C-330 FOR LIGHTWEIGHT CONCRETE.
5. DRYPACK SHALL BE COMPOSED OF ONE PART OF PORTLAND CEMENT TO NOT MORE THAN THREE PARTS OF SAND.
6. ANCHOR BOLTS, DOWELS, INSERTS, ETC., SHALL BE SECURLY TIED IN PLACE PRIOR TO POURING CONCRETE.
7. CONCRETE SHALL BE CURED BY KEEPING CONTINUOUSLY WET FOR 10 DAYS OR BY AN APPROVED CURING COMPOUND.
8. ALL CONCRETE SHALL BE NORMAL WEIGHT CONCRETE EXCEPT AS NOTED.
9. STRUCTURAL LIGHTWEIGHT CONCRETE SHALL BE SAND LIGHTWEIGHT AND HAVE A DRY DENSITY RANGE OF 110 pcf TO 115 pcf.
10. ADMIXTURES SHALL COMPLY WITH ASTM A494 AND SHALL NOT BE CONSIDERED TO REDUCE THE CEMENT CONTENT (CALCIUM CHLORIDE SHALL NOT BE USED).
11. WATER SHALL BE CLEAN AND FREE OF ACID, ALKALIS AND ORGANIC MATERIALS.
12. CONCRETE SHALL BE PROPORTIONED SUCH THAT THE 7 DAY STRENGTHS ARE A MINIMUM OF 70% OF THE SPECIFIED 28 DAY STRENGTH FOR ANY CONCRETE CONSTRUCTION REQUIRING SHORING, BRACING OR TO RECEIVE CONSTRUCTION LOADS.
13. REFER TO ARCHITECTURAL DRAWINGS FOR CURBS, DEPRESSIONS, SLOPES, AND GROOVES REQUIRED TO BE CAST INTO CONCRETE.
14. SLEEVE PLUMBING OPENINGS IN CONCRETE SLABS BEFORE PLACING CONCRETE. NO SLEEVES OR CHASES SHALL BE PLACED IN FOOTING UNLESS SPECIFICALLY NOTED BY THE STRUCTURAL PLANS.

REINFORCING STEEL NOTES:

1. ALL PORTIONS OF WORK PERTAINING TO FABRICATION AND PLACEMENT OF REINFORCING STEEL SHALL CONFORM TO TITLE 24, ART 2, CHAPTER 19
2. REINFORCING BARS SHALL CONFORM TO ASTM A-615 GRADE 60, EXCEPT THAT #3 BARS MAY BE GRADE 40. REINFORCING BARS THAT ARE TO BE WELDED SHALL CONFORM TO ASTM A-706, GRADE 60.
3. WELDING OF REINFORCEMENT SHALL BE WITH LOW HYDROGEN ELECTRODES AND SHALL CONFORM TO STRUCTURAL WELDING CODE - REINFORCING STEEL, SWS D1.4, BY THE AMERICAN WELDING SOCIETY AND SEC. 1903.8. WELDING RODS USED FOR THE WELDING OF REINFORCING SHALL BE E-70XX. ALL WELDING SHALL BE PERFORMED BY CERTIFIED WELDERS.
4. ALL REINFORCING BAR BENDS SHALL BE MADE COLD. ALL #5 OR LARGER REINFORCING BARS SHALL NOT BE RE-BENT.
5. FUSION WELDED REINFORCING STEEL ASSEMBLIES SHALL CONFORM TO SEC. 1903.8. TIES/STIRRUP BARS IN FUSION WELDED ASSEMBLIES SHALL CONFORM TO ASTM A-706, AND LONGITUDINAL HOLDING WIRES SHALL CONFORM TO ASTM A-1064.
6. WELDED WIRE FABRIC SHALL CONFORM TO ASTM A-185, AND SHALL BE LAPPED 1-1/2 SPACING AND 12" MINIMUM.
7. DOWELS BETWEEN FOOTINGS AND WALLS OR COLUMNS SHALL BE THE SAME GRADE, SIZE, SPACING AND NUMBER AS THE VERTICAL REINFORCEMENT, RESPECTIVELY.
8. REINFORCING SPLICES SHALL BE MADE AS INDICATED ON THE DRAWINGS.

MORGAN STRUCTURAL
www.morganstrucutural.com
(858) 284-4151

REGISTERED PROFESSIONAL ENGINEER
CHRIS M. COBB
No. S 6622
STATE OF CALIFORNIA

IDLEWILD ADUs
3153 IDLEWILD WY
SAN DIEGO, CA 92117

Revisions:

△	Date

Date:	03/08/26
Scale:	NTS
Project No:	26.036
Sheet:	

S-1.0

GENERAL NOTES

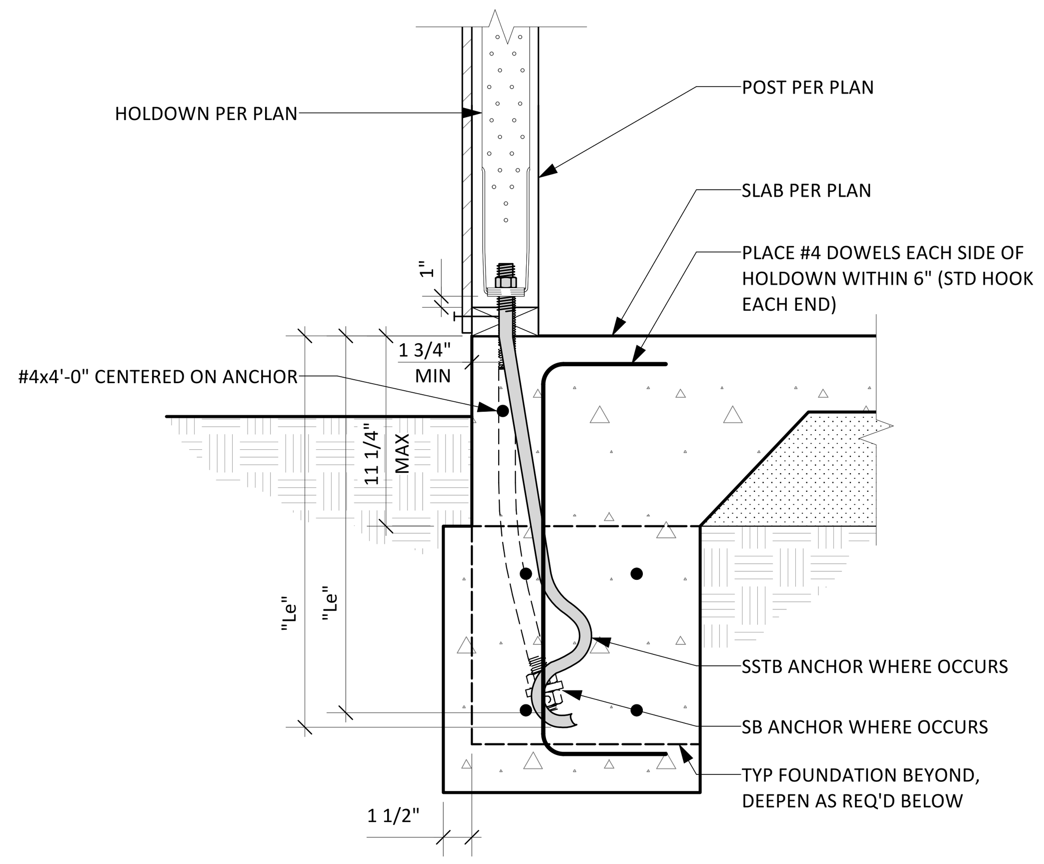

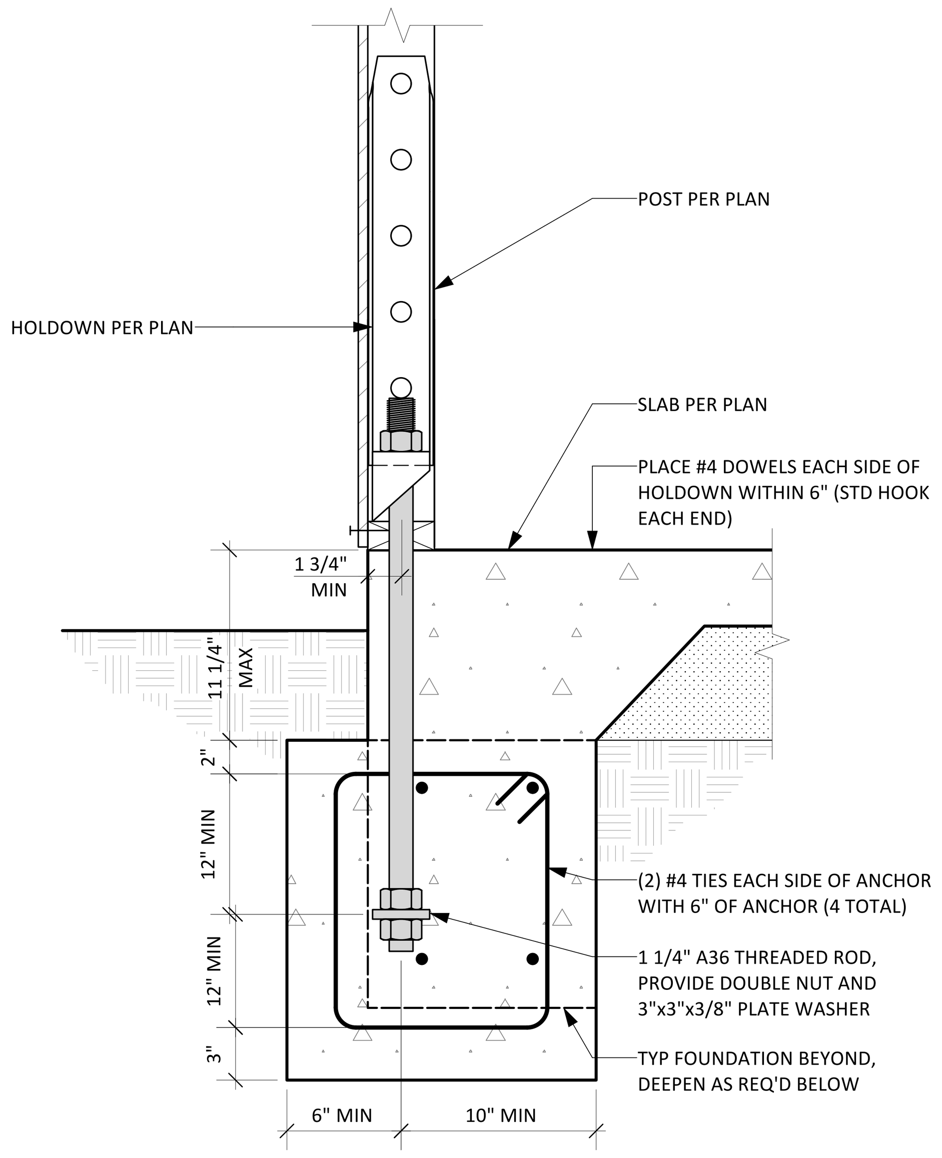

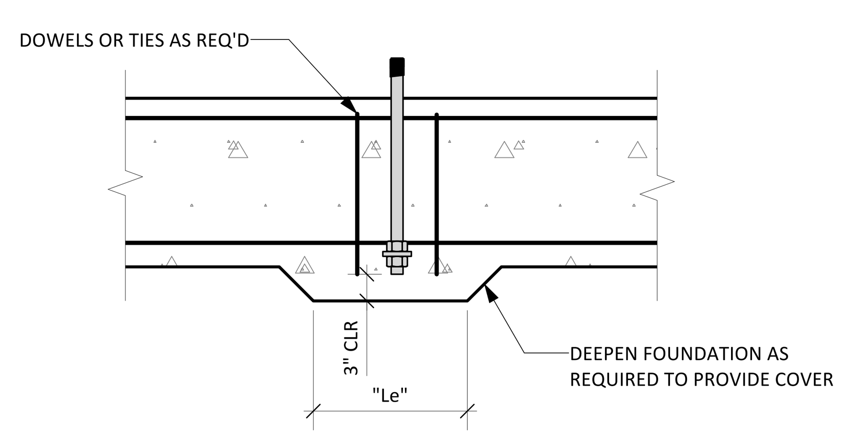

HOLDOWN SCHEDULE					
STRAP	HD BOLT	THREADED ROD	"Le"	FASTENER	POST
HDU4	SSTB24	5/8" (A36)	20 5/8"	(10) 1/4x2-1/2 SDS	2-2x
HDU8	SSTB28L	7/8" (A36)	24 7/8"	(20) 1/4x2-1/2 SDS	4x4
HDU11	SB1x30	1" (A36)	24"	(30) 1/4x2-1/2 SDS	4x6
HDU14	SB1x30	1" (A36)	24"	(36) 1/4x2-1/2 SDS	6x6 OR 4x8
HD19	1-1/4" (A36)	1-1/4" (A36)	30"	(5) 1" MB	6x6 OR 4x8

12 TYPICAL HOLDOWN

SPREAD FOUNDATION SCHEDULE				
TYPE	A	D	REINFORCING	REMARKS
F-1.5	1'-6"	1'-0"	(3) #4 BAR EA.WAY	T&B
F-2.0	2'-0"	1'-6"	(3) #5 BAR EA. WAY	
F-2.5	2'-6"	1'-6"	(4) #5 BAR EA. WAY	
F-3.0	3'-0"	1'-6"	(5) #5 BAR EA. WAY	
F-4.0	4'-0"	1'-6"	(6) #5 BAR EA. WAY	

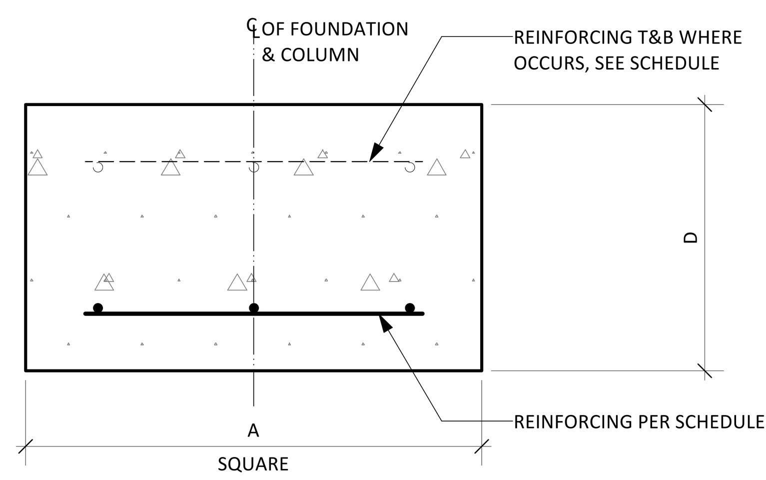

7 TYPICAL SPREAD FOUNDATION SCHEDULE

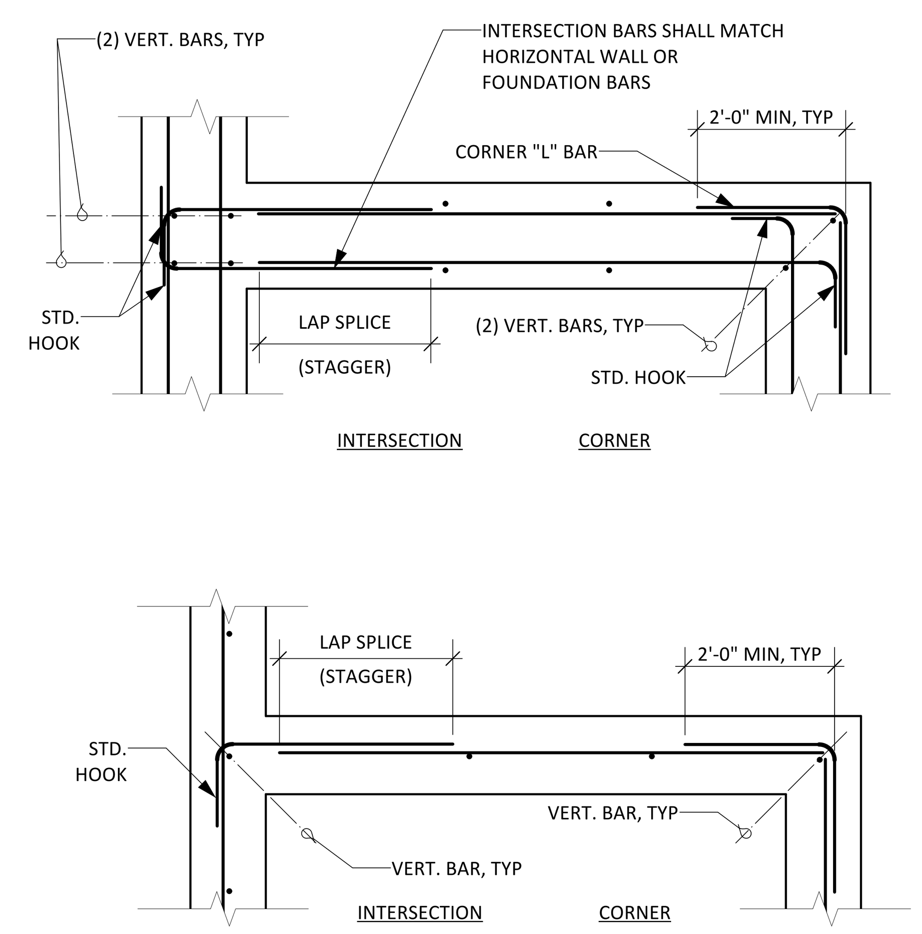

8 TYPICAL WALL OR FOUNDATION INTERSECTIONS

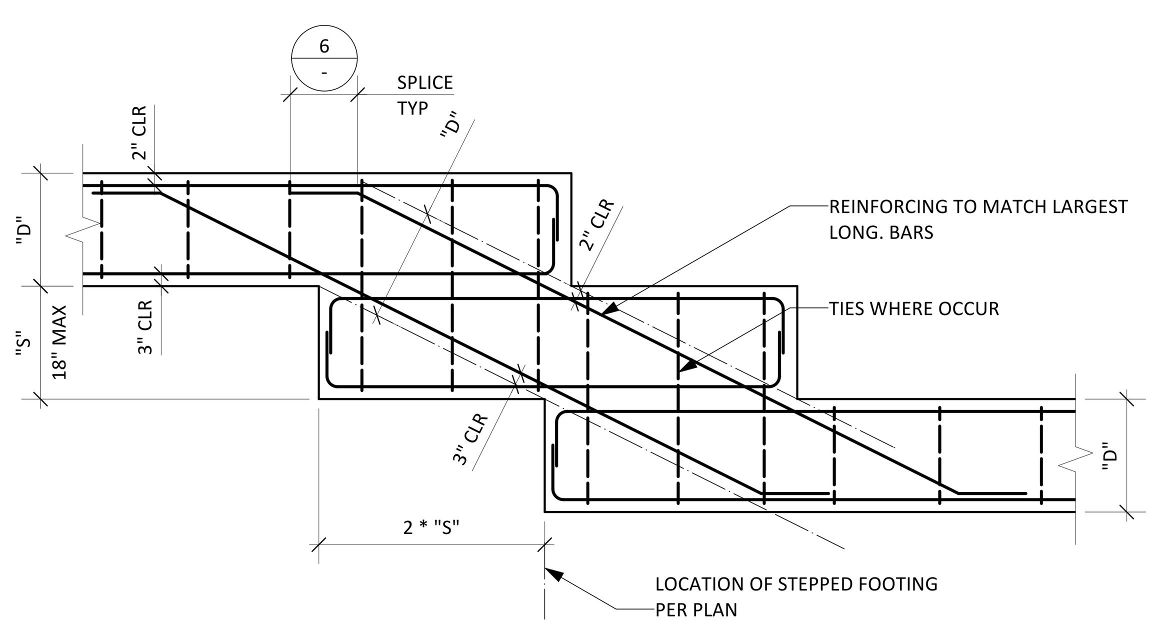

NOTES:

1. FOR FOUNDATION REINFORCING SEE FOUNDATION SCHEDULE OR SECTIONS.
2. VERTICAL WALL DOWELS SHALL EXTEND TO BOTTOM OF FOUNDATION.

9 TYPICAL STEPPED FOUNDATION

CONCRETE LAP SPLICE LENGTH			
BAR SIZE	BAR DIAMETER (db)	LAP SPLICE LENGTH TENSION	TENSION DEVELOPMENT LENGTH FOR STRAIGHT BAR
#3	0.375"	24	20
#4	0.5"	30	23
#5	0.625"	38	28
#6	0.75"	46	34
#7	0.875"	63	34
#8	1"	72	34

NOTES:

1. TABULATED VALUES ARE FOR GRADE 60 REINFORCING BAR (#3 BAR MAY BE GRADE 40).

4 TYPICAL CONCRETE LAP SPLICE SCHEDULE

HOOKED DEVELOPMENT LENGTH SCHEDULE (Ldh) IN INCHES			
NORMAL WEIGHT CONCRETE (f'c PSI)		W/ COVER	W/O COVER
BAR SIZE	BAR DIAMETER (db)	Ldh	Ldh
#3	0.375"	6	9
#4	0.5"	9	12
#5	0.625"	11	15
#6	0.75"	13	18
#7	0.875"	15	22

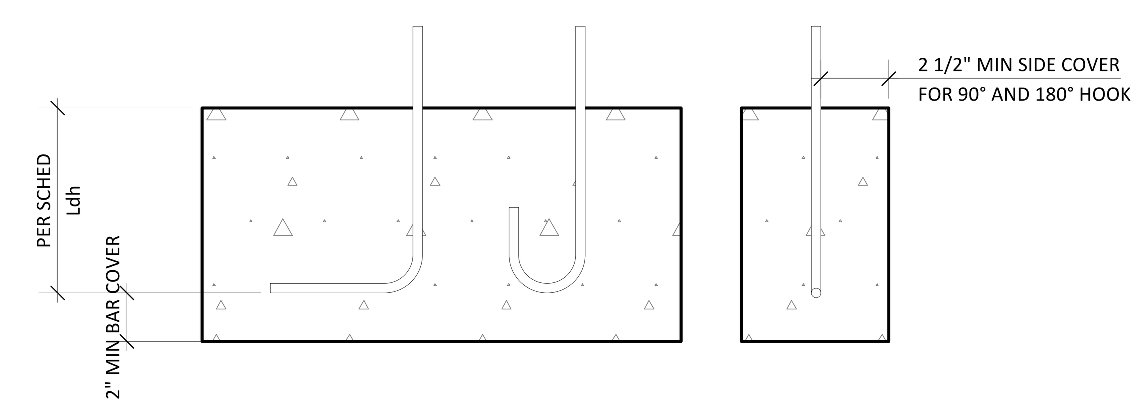

5 TYPICAL CONCRETE STANDARD HOOKED BAR DEVELOPMENT

6

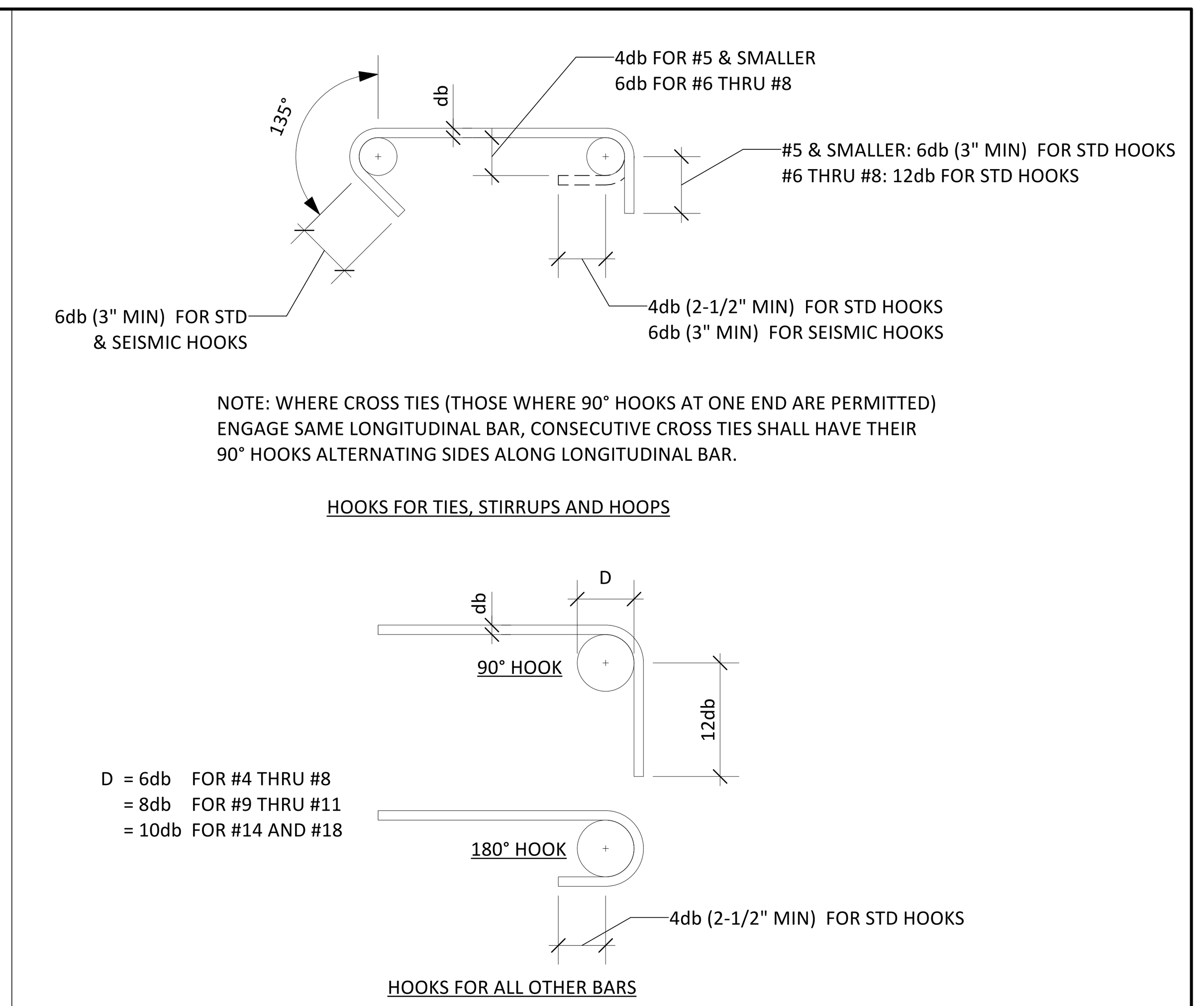

1 TYPICAL REINFORCING STEEL STANDARD AND SEISMIC HOOK DETAILS

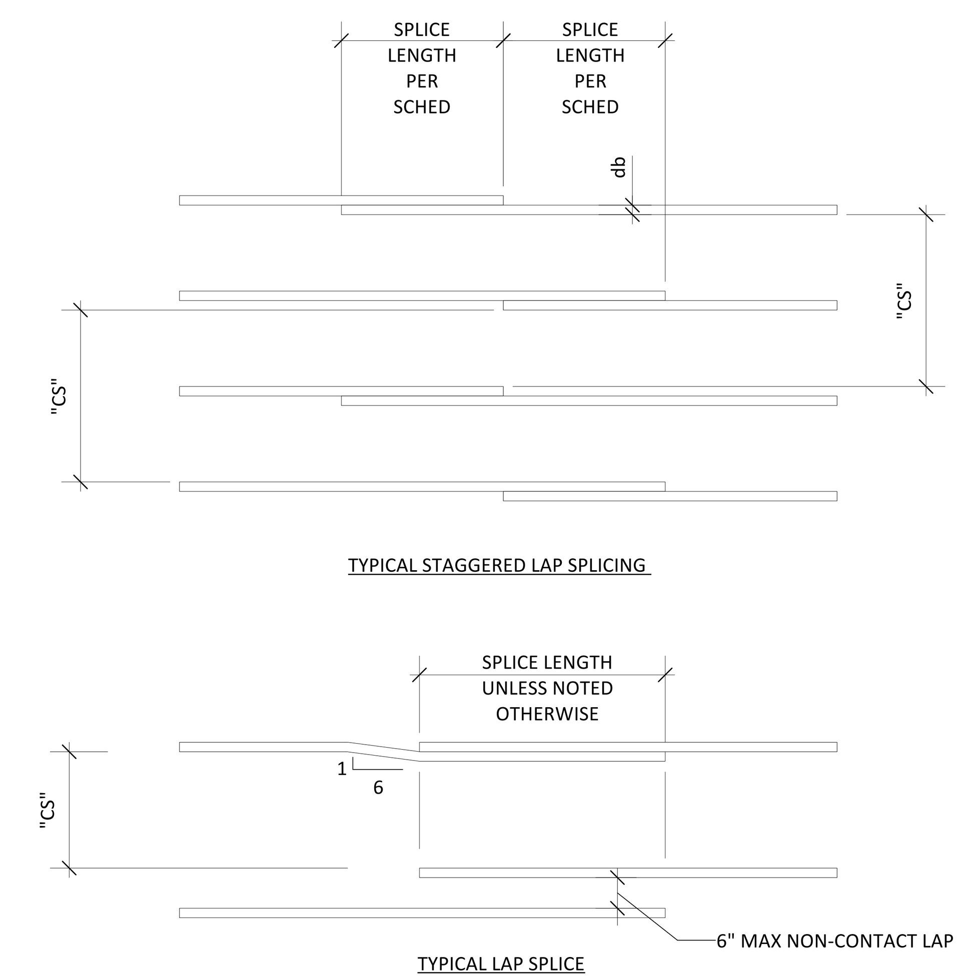

2 TYPICAL LAP SPLICE DETAILS

PROVIDE THE FOLLOWING CONCRETE CLEAR COVER (CC) FOR REINFORCING STEEL PLACED IN CAST-IN-PLACE CONCRETE

A. CONCRETE CAST AGAINST AND PERMANENTLY EXPOSED TO EARTH........... 3"
B. CONCRETE EXPOSED TO EARTH OR WEATHER:
NO. 6 THROUGH NO. 18 BARS.. 2"
NO. 5 BARS, W31 OR D31 WIRE, AND SMALLER..........................1-1/2"
C. CONCRETE NOT EXPOSED TO WEATHER OR IN CONTACT WITH GROUND:
SLAB, WALL, JOISTS:
NO. 14 AND NO. 18 BARS..1-1/2"
NO. 11 BARS AND SMALLER... 1"
BEAMS AND COLUMNS:
PRIMARY REINFORCEMENT, TIES, STIRRUPS, SPIRALS....1-1/2"

3 TYPICAL CONCRETE CLEAR COVER

MORGAN STRUCTURAL
(858) 284-4151
www.morganstructural.com

REGISTERED PROFESSIONAL ENGINEER CHRIS M. COBB No. S 6642 STATE OF CALIFORNIA

IDLEWILD ADUs

3153 IDLEWILD WY
SAN DIEGO, CA 92117

Revisions:

△	Date

Date: 03/08/26
Scale:
Project No: 26.036
Sheet:

S-1.1

TYPICAL CONCRETE DETAILS

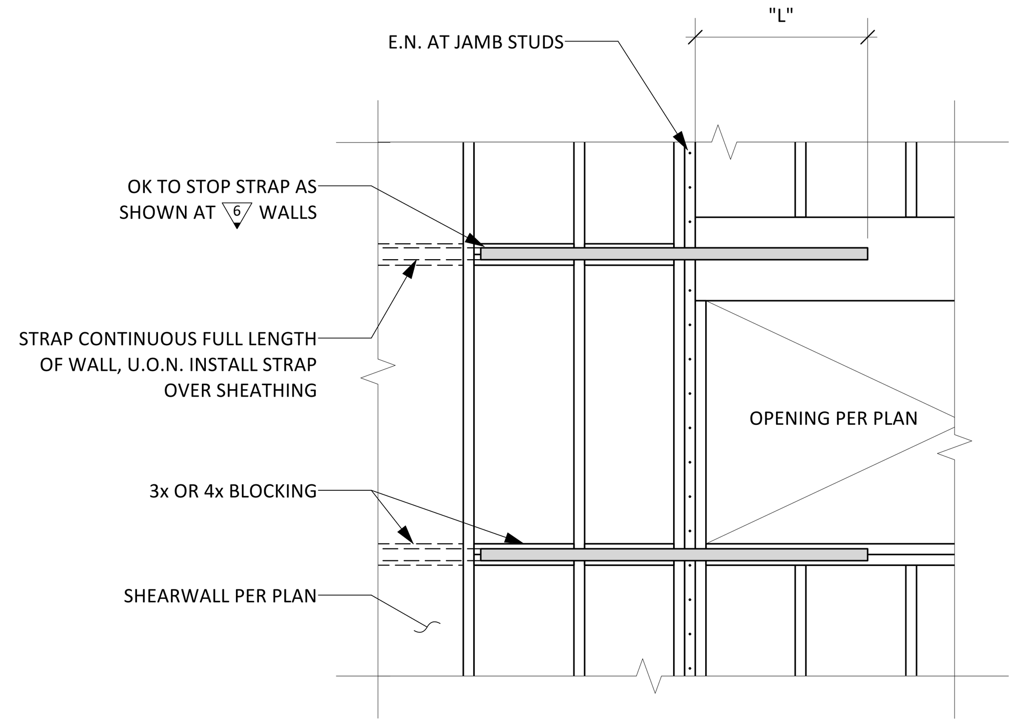

STRAP SCHEDULE

WALL TYPE	STRAP	"L"	FASTENER	BLOCK
6	CS14	27"	(28) 10d	3x
ALL OTHERS	CMST12	39"	(86) 16d	4x

10 TYPICAL HOLE IN SHEARWALL

STRAP SCHEDULE

STRAP	"L"	FASTENER	POST
CS14	27"	(28) 10d	2-2x
CMSTC16	20"	(50) 16d	2-2x
CMST14	30"	(66) 16d	4x4
CMST12	39"	(86) 16d	4x6

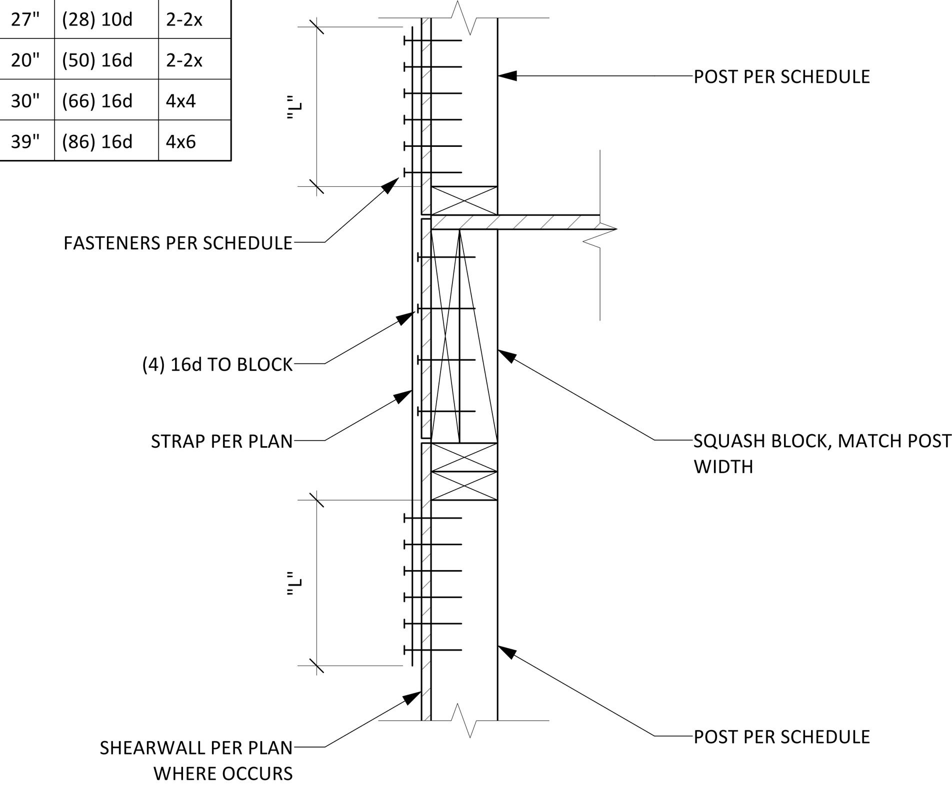

7 TYPICAL HOLDOWN STRAP

SHEARWALL SCHEDULE

TYPE	STRUCT 1 SHEATHING	SIDES	E.N.	ANCHOR BOLTS [11]	SILL FASTENER AT ELEVATED FLOOR [12]	CLIPS [13]	PLF
6	1/2" STRUCTURAL 1	1	10d @ 6"	5/8" @ 31"	5/8" @ 22"	A-35 OR LTP4 @ 16"	340
4	1/2" STRUCTURAL 1	1	10d @ 4"	5/8" @ 24"	5/8" @ 15"	A-35 OR LTP4 @ 12"	510
3	1/2" STRUCTURAL 1	1	10d @ 3"	5/8" @ 16"	5/8" @ 11"	A-35 OR LTP4 @ 9"	665
2	1/2" STRUCTURAL 1	1	10d @ 2"	5/8" @ 12"	5/8" @ 8"	A-35 OR LTP4 @ 6"	870
44	1/2" STRUCTURAL 1	2	10d @ 4"	5/8" @ 9"	5/8" @ 7"	A-35 OR LTP4 @ 6"	1020
33	1/2" STRUCTURAL 1	2	10d @ 3"	5/8" @ 8"	5/8" @ 5"	A-35 OR LTP4 @ 8" EA SIDE	1330

NOTES:
1. EDGE NAILING (E.N.), SEE SCHEDULE
2. INTERMEDIATE NAILING @ 12", SAME SIZE AS E.N.
3. EDGE DISTANCE FOR NAILS SHALL BE 3/8" FOR 2x MEMBERS AND 1/2" FOR 3x MEMBERS. MINIMUM NAIL PENETRATION IN FRAMING MEMBER SHALL BE 1-1/2".
4. PROVIDE E.N. ALONG POST WHERE HOLDOWN ANCHOR OCCURS, AT WALL BOUNDARIES OR INTERIOR.
5. STAGGER E.N. ALONG ADJOINING PANEL EDGES.
6. ALL NAILS SHALL BE COMMON, U.O.N.
7. ALL EDGES OF ALL PANELS SHALL BE SUPPORTED BY AND FASTENED TO FRAMING MEMBERS OR BLOCKING.
8. PLYWOOD SHALL BE INSTALLED VERTICALLY OR HORIZONTALLY, STAGGER JOINTS AS SHOWN.
9. USE 3"x3"x1/4" SLOTTED PLATE WASHERS. BOLTS AND WASHERS SHALL BE HOT DIPPED GALVANIZED WHERE IN CONTACT WITH P.T. LUMBER. NOT REQUIRED WHERE GREENBOARD IS USED.
10. MINIMUM (2) BOLTS PER SILL PLATE, SPACED NO MORE THAN 12" OR LESS THAN 5" FROM ENDS.
11. SPECIAL INSPECTION REQUIRED FOR TITEN HD ANCHORS.
12. 5" MINIMUM EMBEDMENT INTO MAIN MEMBER. WHERE LAG BOLTS ARE INSTALLED TO BLOCKING, MINIMUM DISTANCE TO END OF BLOCK IS 4.5", MINIMUM SPACING IS 2.5". AVERAGE SPACING OF LAG BOLTS MUST MATCH VALUES GIVEN ABOVE.
13. A-35 AND LTP4 CLIPS SHALL USE THE MAXIMUM NUMBER OF SD9112 SCREWS AS REQUIRED BY THE MANUFACTURER.
14. WHERE PANELS ARE APPLIED ON BOTH FACES OF A SHEAR WALL AND NAIL SPACING IS LESS THAN 6" ON CENTER ON EITHER SIDE, PANEL JOINTS SHALL BE OFFSET TO FALL ON DIFFERENT FRAMING MEMBERS. ALTERNATIVELY, THE WIDTH OF THE NAILED FACE OF FRAMING MEMBERS SHALL BE 3" NOMINAL OR GREATER AT ADJOINING PANEL EDGES AND NAILS AT ALL PANEL EDGES SHALL BE STAGGERED.

NOTE: SEE 10/- FOR STRAPPING AROUND HOLES IN SHEARWALLS WHERE OCCURS

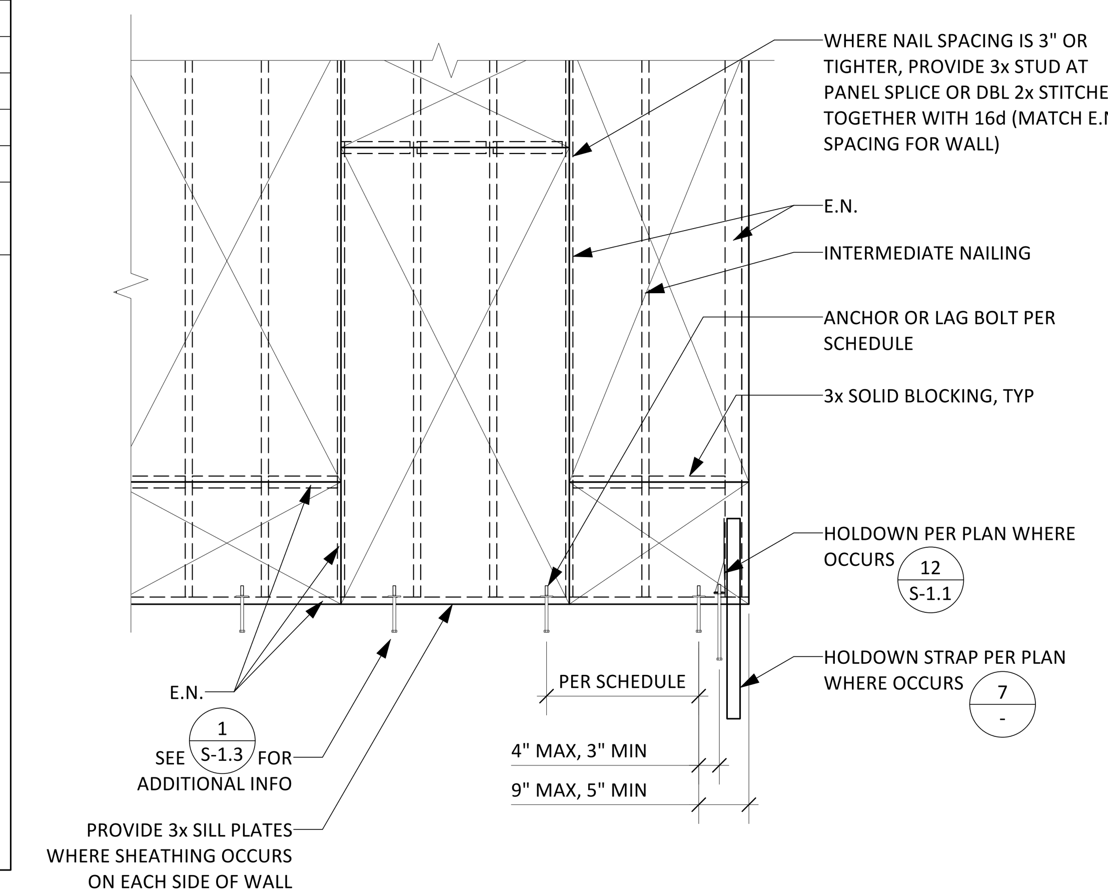

4 TYPICAL SHEARWALL SCHEDULE

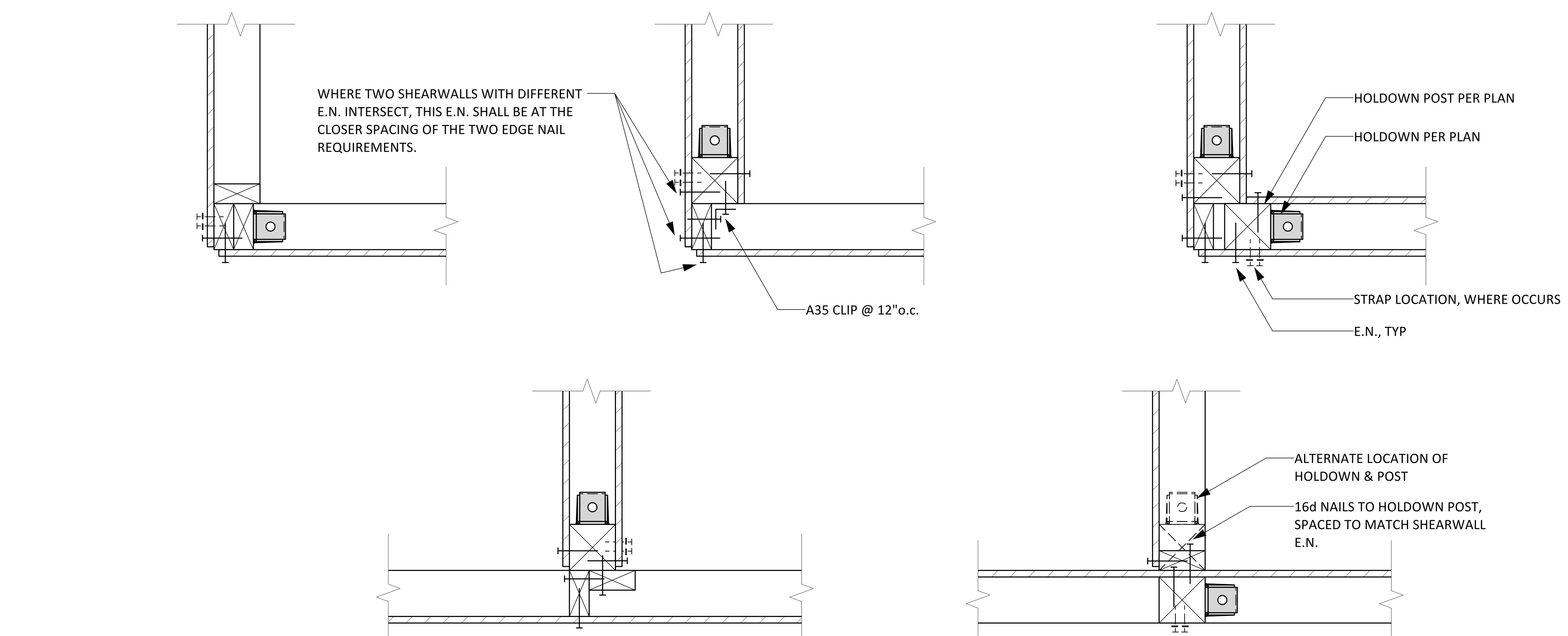

11 TYPICAL SHEARWALL INTERSECTIONS

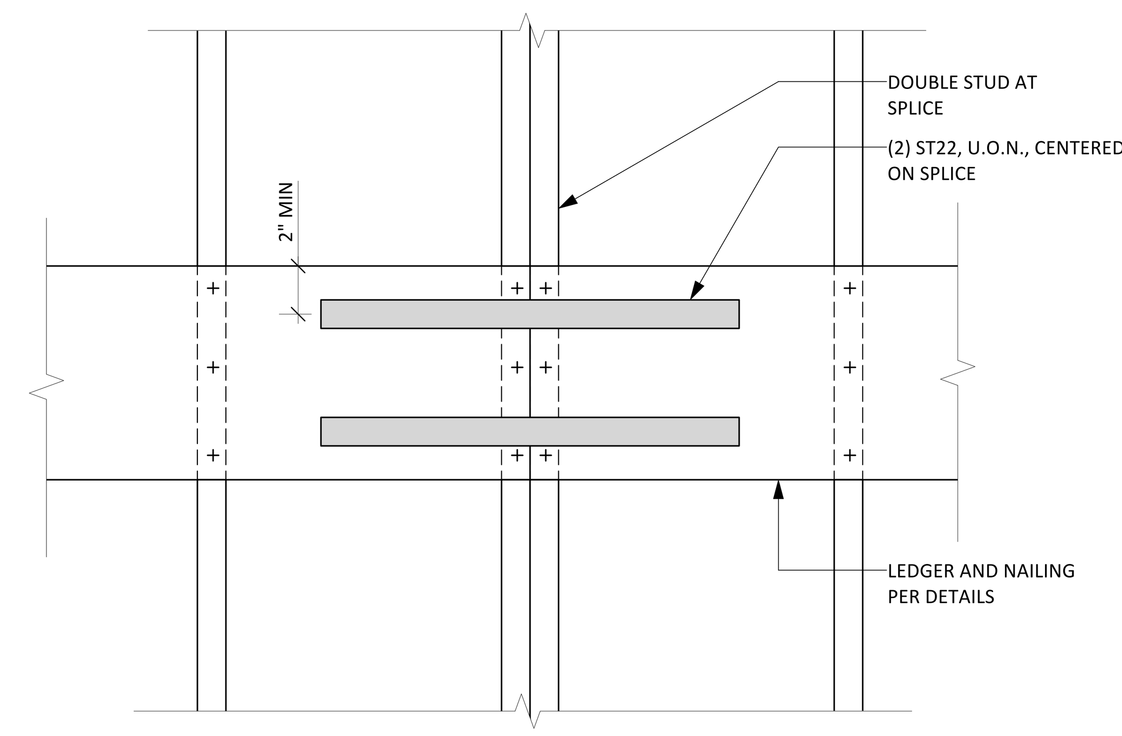

5 TYPICAL LEDGER SPLICE

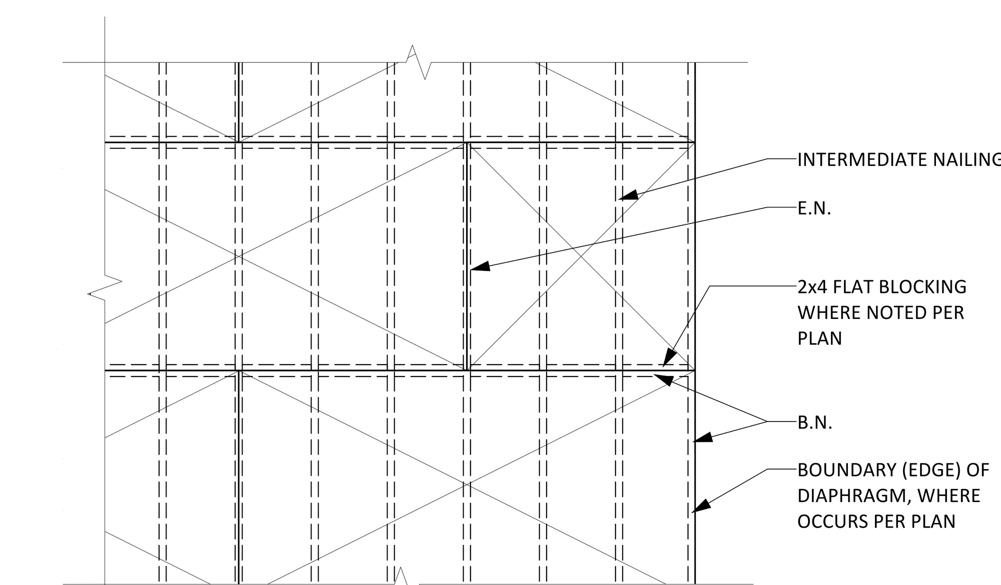

NOTES:
1. SHEATHING THICKNESS AND GRADE PER PLAN.
2. EDGE NAILING (E.N.) PER PLAN.
3. BOUNDARY NAILING (B.N.) PER PLAN.
4. INTERMEDIATE NAILING AT 12"o.c.
5. 2x FLAT BLOCKING WHERE SPECIFIED.
6. SHEATHING PANELS SHALL BE AT LEAST 2'-0" x 2'-0".
7. LONG DIMENSION OF SHEATHING SHALL RUN PERPENDICULAR TO SUPPORTS.
8. NAILS SHALL HAVE 3/8" MIN EDGE DISTANCE AND SHALL NOT BE OVERDRIVEN THROUGH OUTER PLY.

2 TYPICAL HORIZONTAL SHEATHING

STRAP SCHEDULE

STRAP	"L"	FASTENER	MIN. MEMBER WIDTH
CS14	27"	(28) 10d	1-1/2"
CMSTC16	20"	(50) 16d	3-1/2"
CMST14	30"	(66) 16d	3-1/2"
CMST12	39"	(86) 16d	5-1/4"

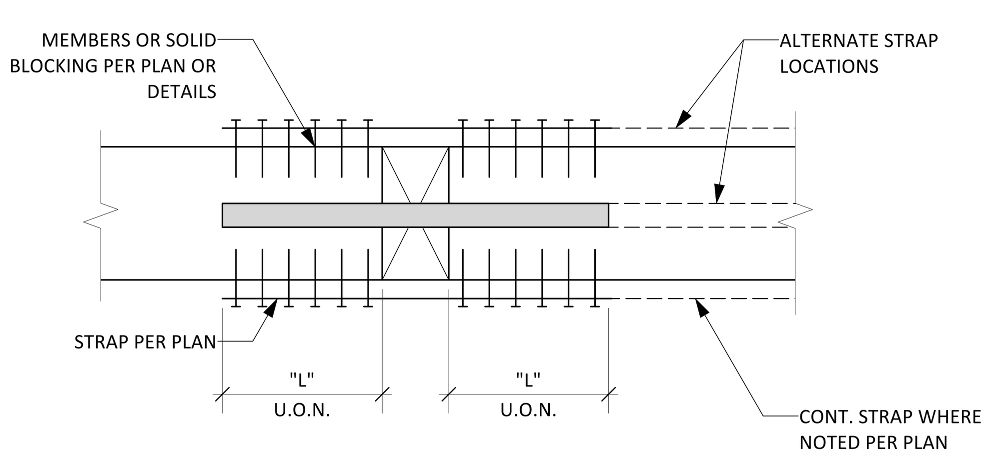

12 TYPICAL DRAG STRAP

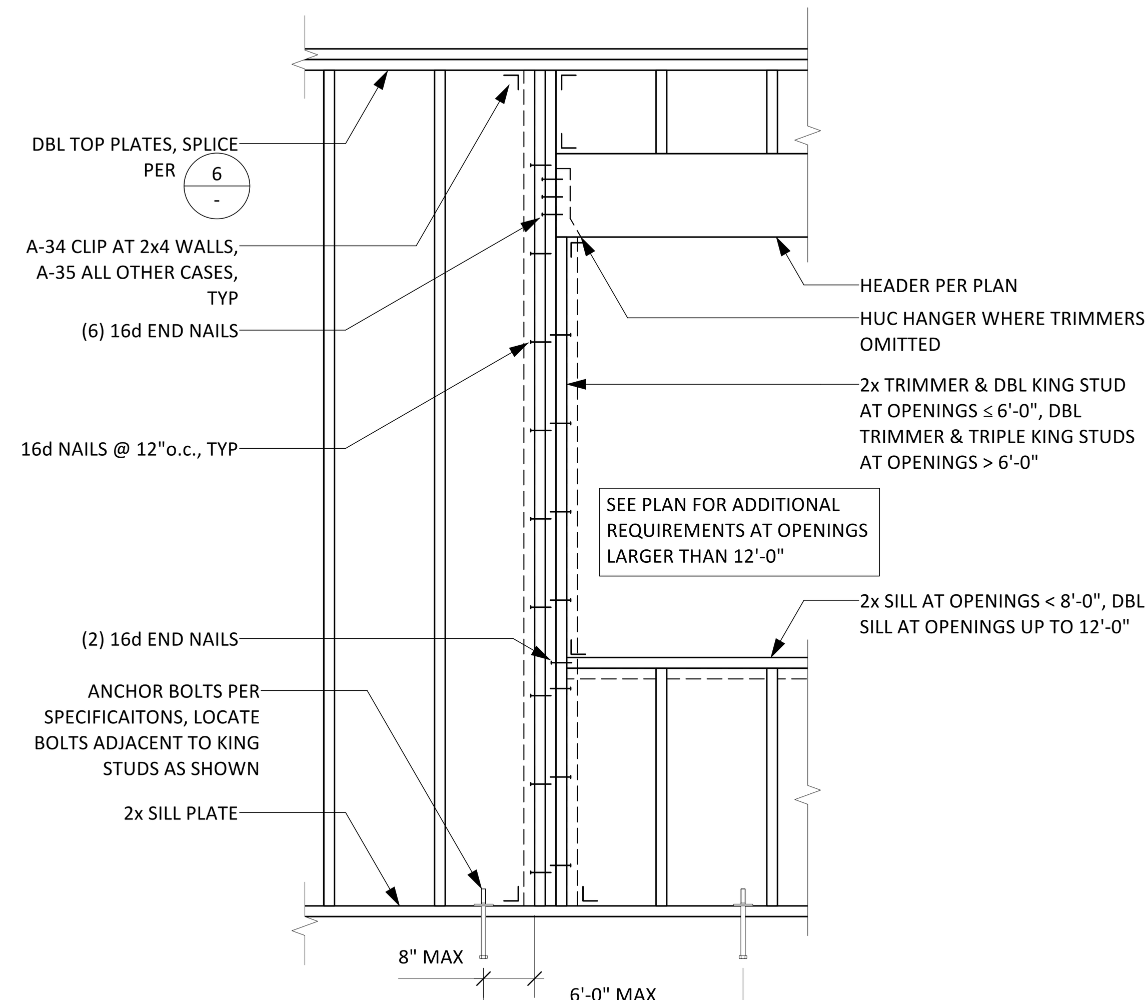

9 TYPICAL FRAMING 2x STUD WALL

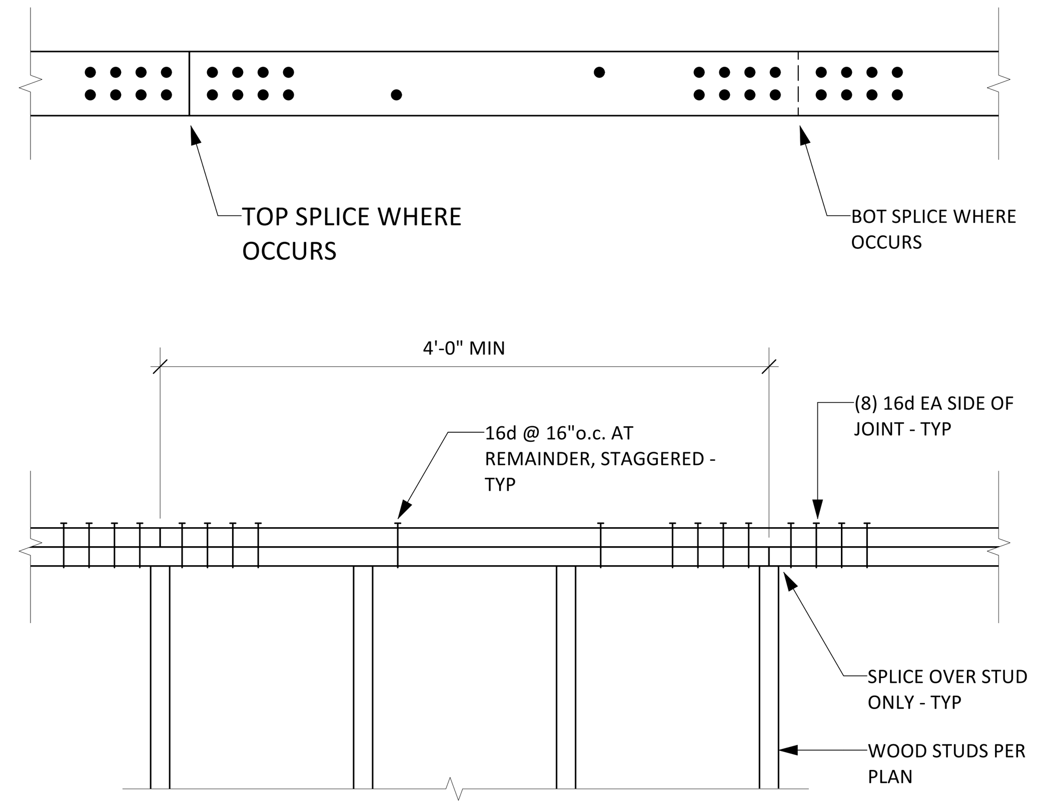

6 TYPICAL DOUBLE TOP PLATE SPLICE

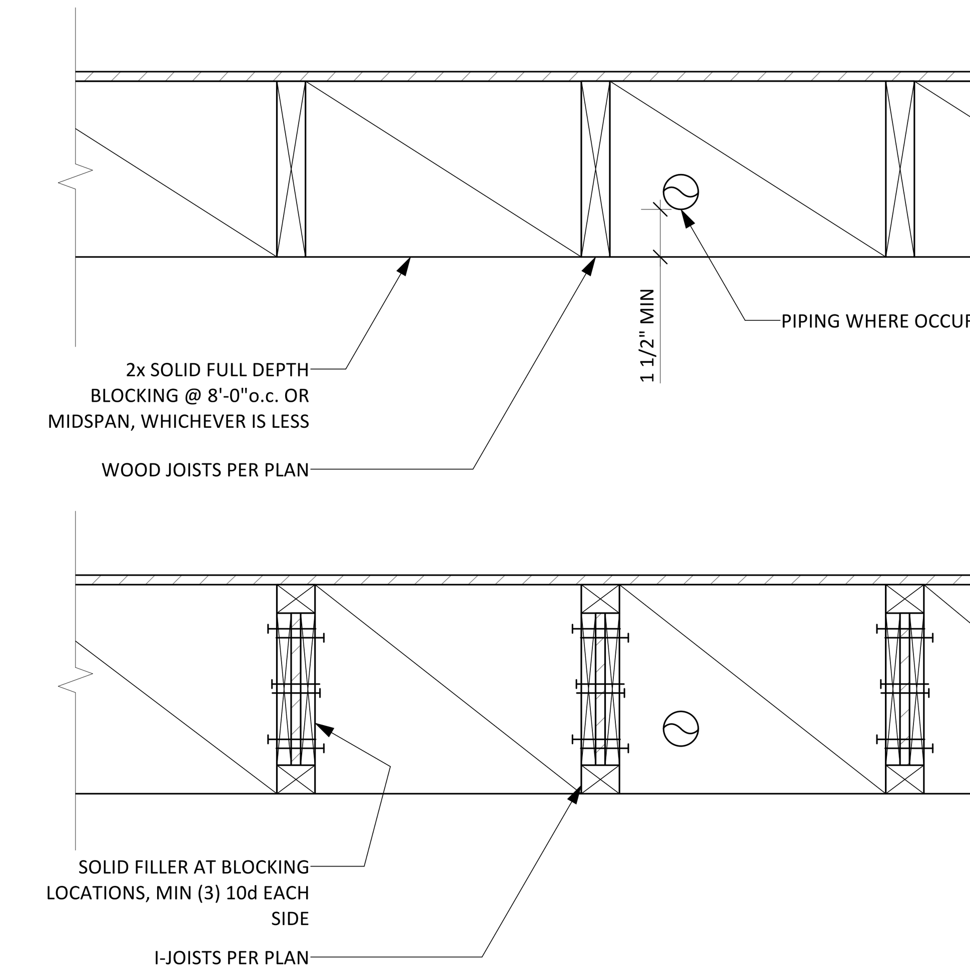

3 TYPICAL WOOD JOIST BRIDGING

MORGAN STRUCTURAL
(858) 284-4151
www.morganstructural.com

IDLEWILD ADUs
3153 IDLEWILD WY
SAN DIEGO, CA 92117

Revisions:

Δ	Date

Date: 03/08/26
Scale:
Project No: 26.036
Sheet:

S-1.2

TYPICAL WOOD DETAILS

NOTE: BORED HOLE SHALL NOT BE LOCATED ON THE SAME SIDE OF STUD AS CUT OR NOTCH. AT EXTERIOR WALLS, NO BORED HOLES OR NOTCHES WITHIN THE MIDDLE 1/3 OF STUD HEIGHT

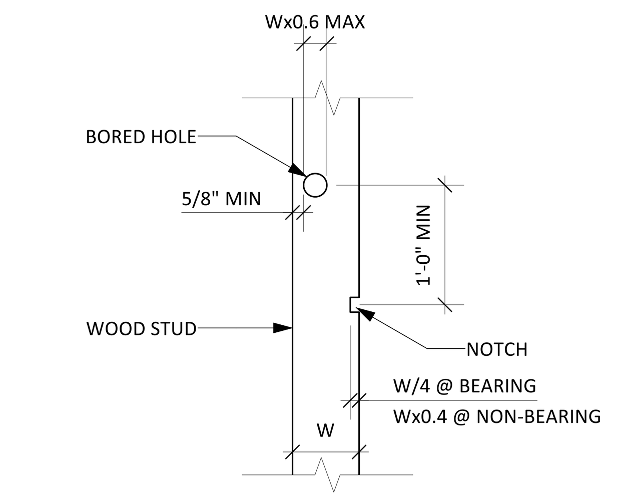

10 TYPICAL WALL STUD NOTCHING & BORING

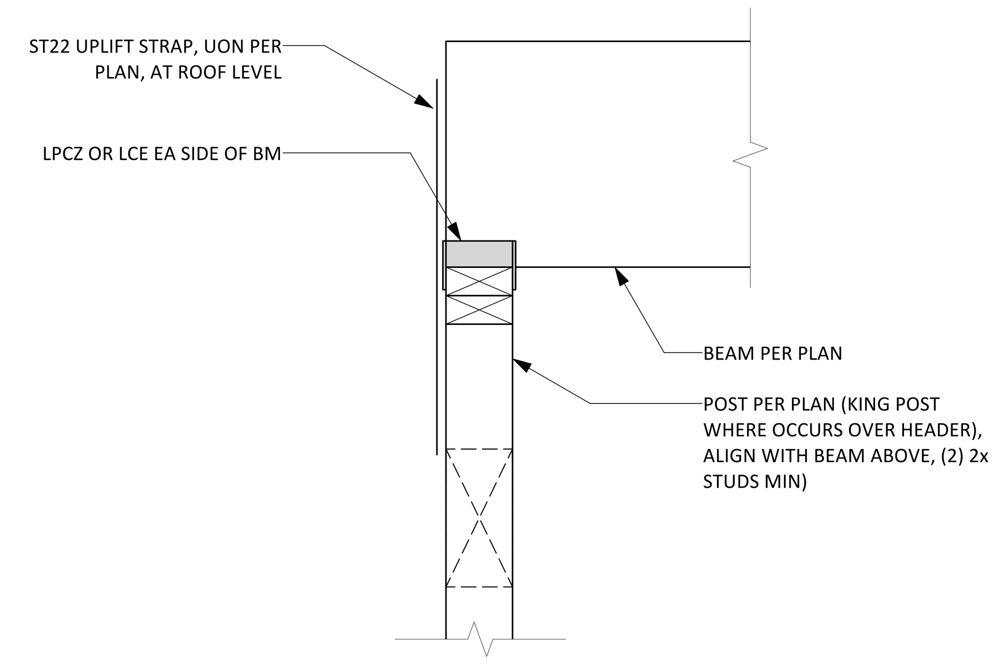

7 TYPICAL BEAM TO TOP PLATE

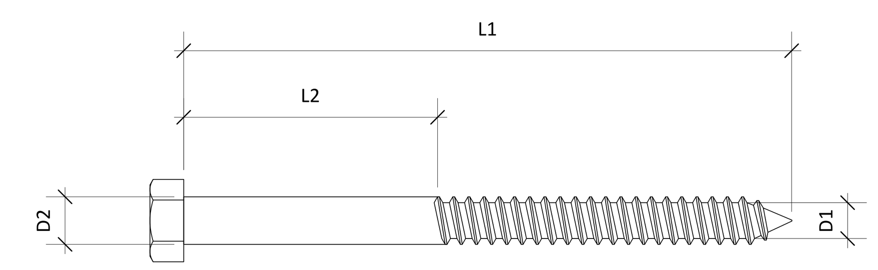

INSTALLATION SEQUENCE

1. DRILL HOLE 60-75% OF D1 FOR DISTANCE OF L1
2. DRILL HOLE OF DIAMETER OF D2 FOR DISTANCE OF L2
3. RETIGHTEN SCREWS BEFORE FINAL CLOSING IN

4 TYPICAL LAG SCREW INSTALLATION

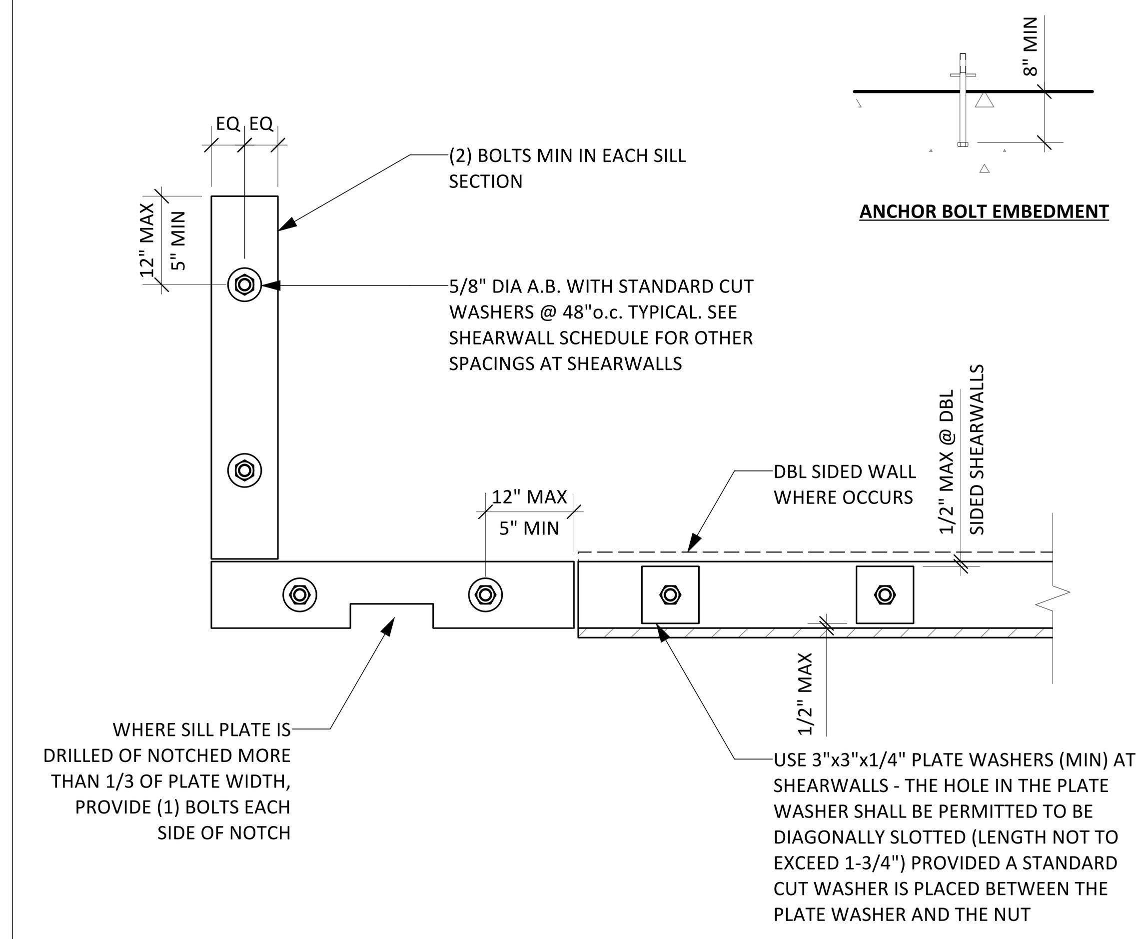

1 TYPICAL ANCHOR BOLTS AT SILL PLATE

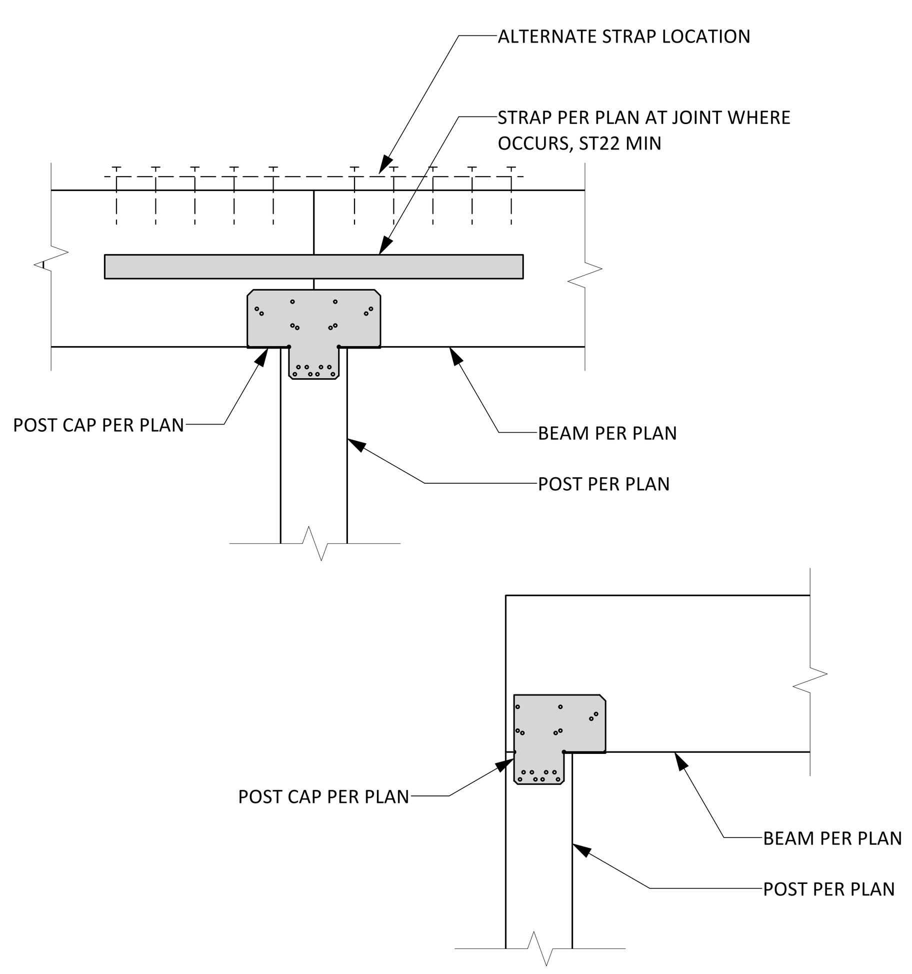

11 TYPICAL BEAM TO POST

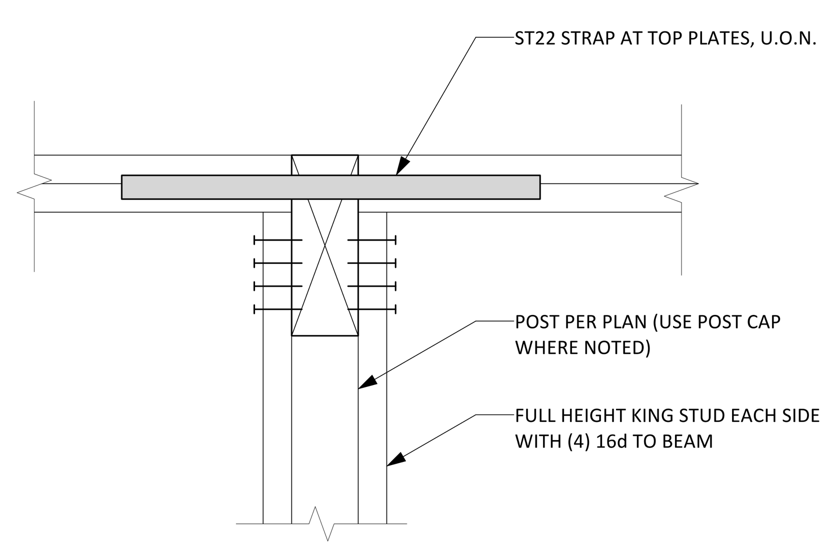

8 TYPICAL BEAM POCKET

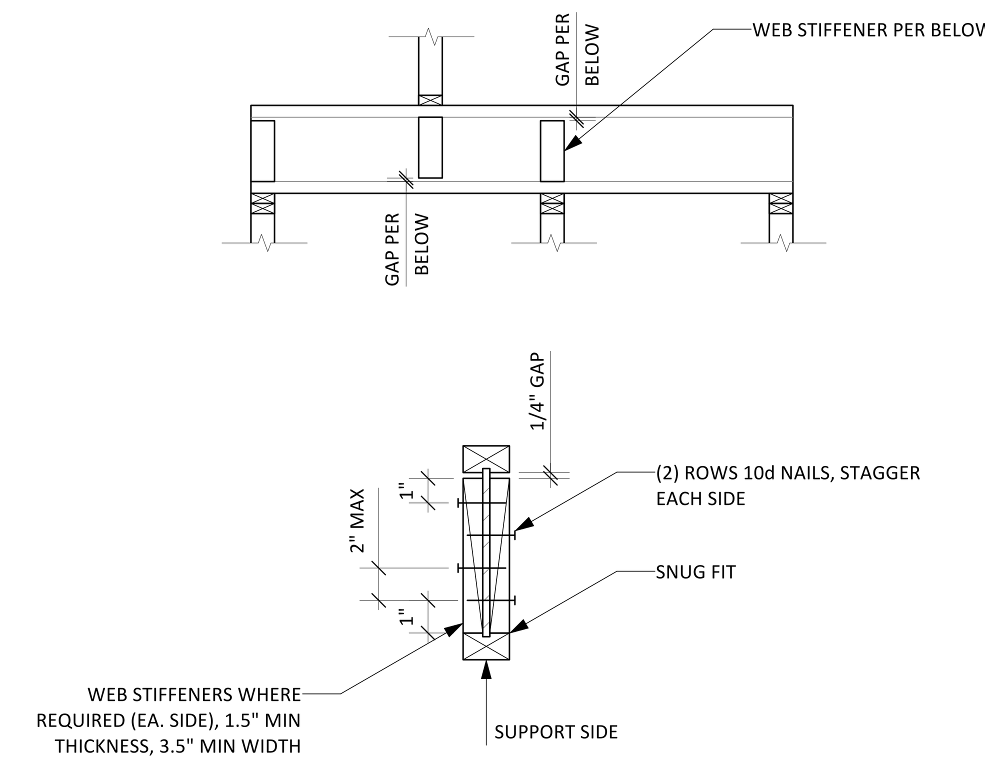

NOTE: WEB STIFFENERS ARE REQUIRED WHERE SHOWN OR NOTED PER PLAN OR DETAILS. STIFFENERS ARE REQUIRED AT ALL MID-SPAN BEARING CONDITIONS

5 TYPICAL WEB STIFFENER INSTALLATION

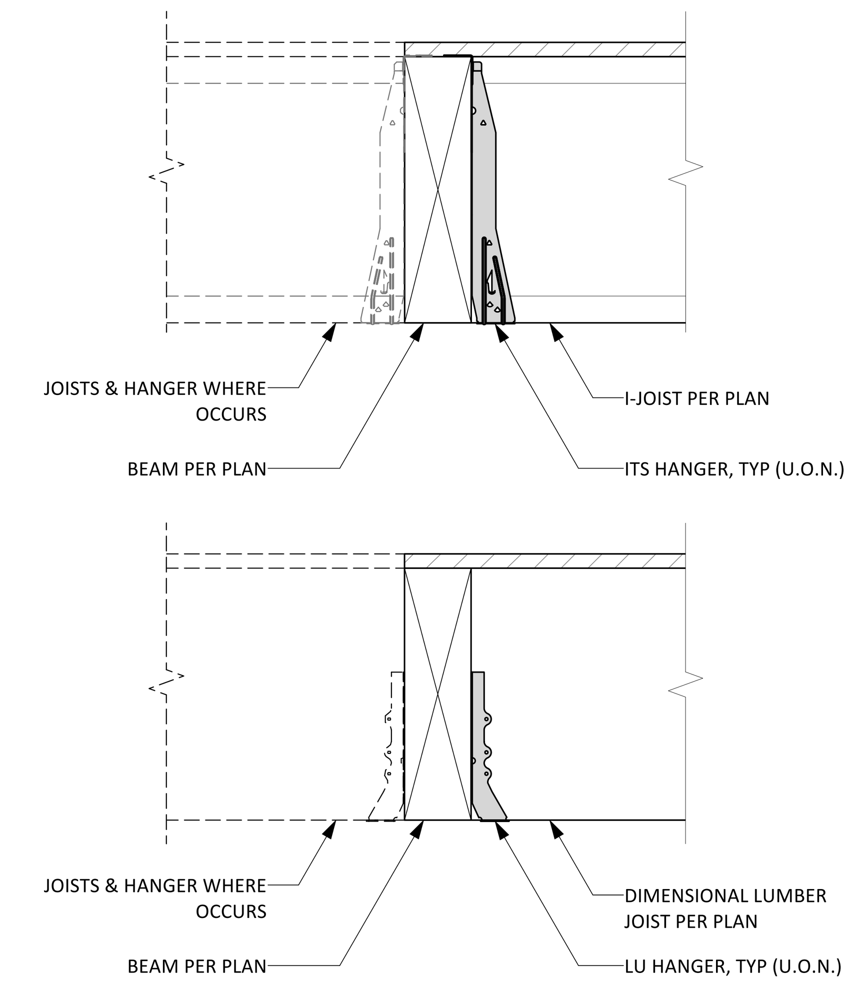

2 TYPICAL JOIST TO BEAM CONNECTION

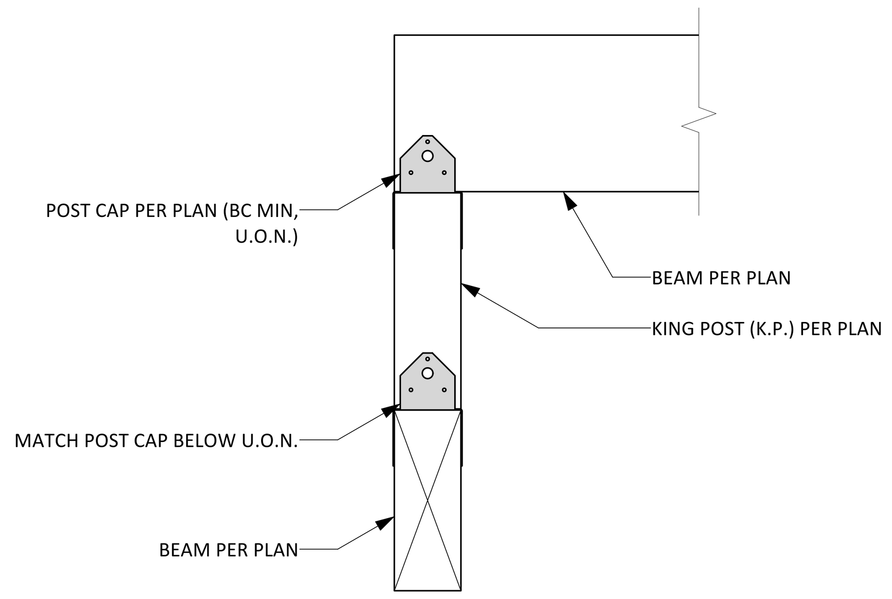

12 TYPICAL KING POST TO BEAMS

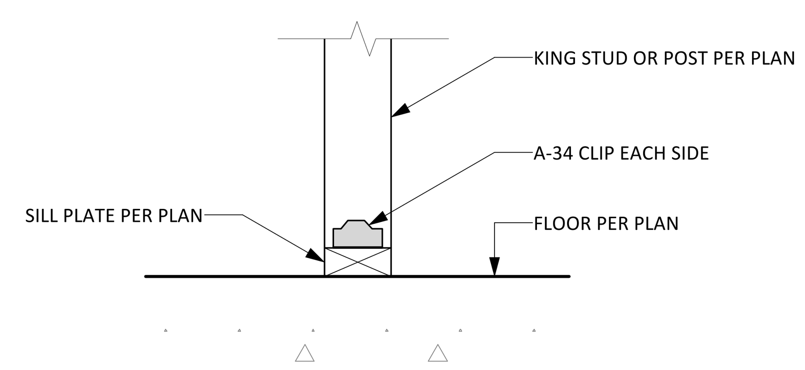

9 TYPICAL KING STUD/POST AT SILL PLATE

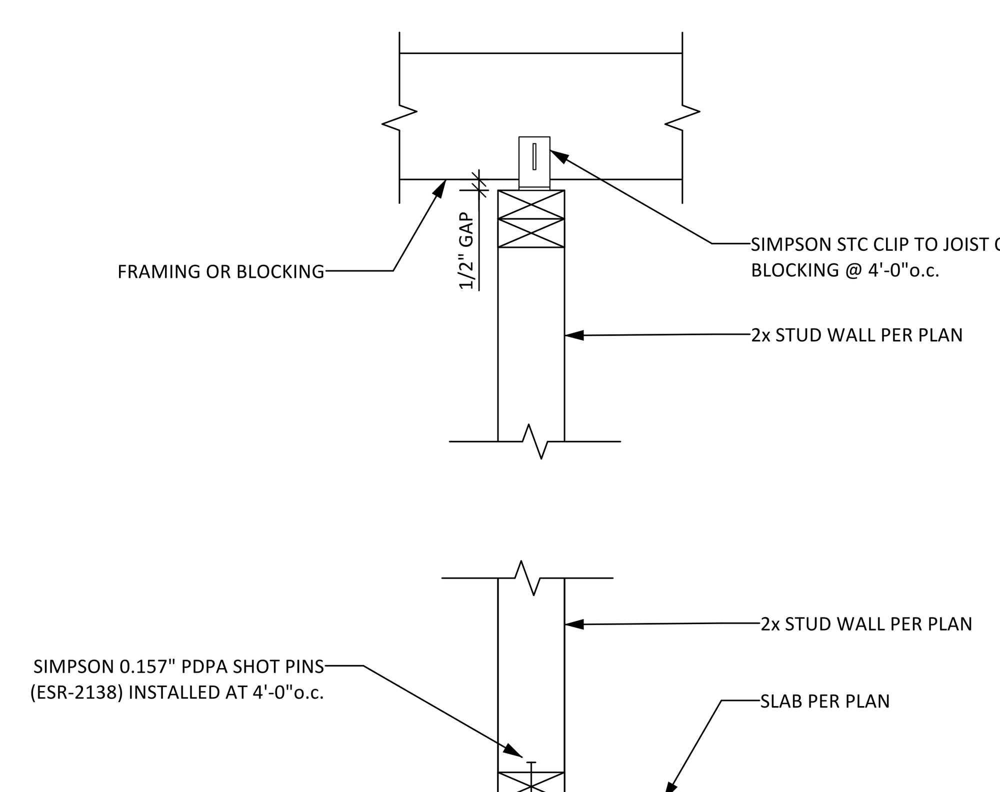

6 TYPICAL NON-BEARING WALL CONNECTIONS

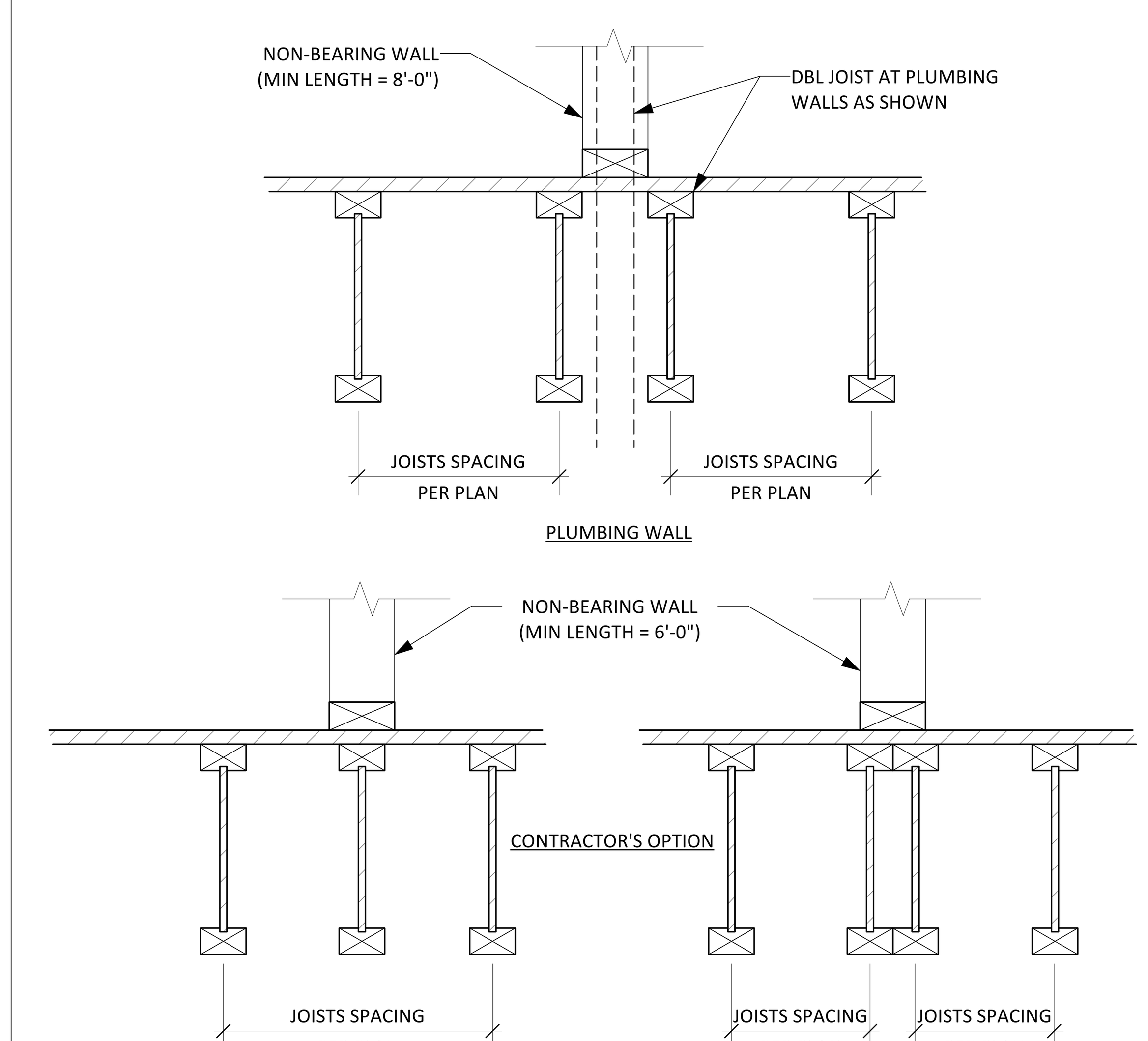

3 TYPICAL NON-BEARING WALL SUPPORT

MORGAN STRUCTURAL
(858) 284-4151
www.morganstructural.com

REGISTERED PROFESSIONAL ENGINEER
CHRIS M. COBB
No. S 6682
STATE OF CALIFORNIA

IDLEWILD ADUs

3153 IDLEWILD WY
SAN DIEGO, CA 92117

Revisions:	
△	Date

Date: 03/08/26

Scale:

Project No: 26.036

Sheet:

S-1.3

TYPICAL WOOD DETAILS

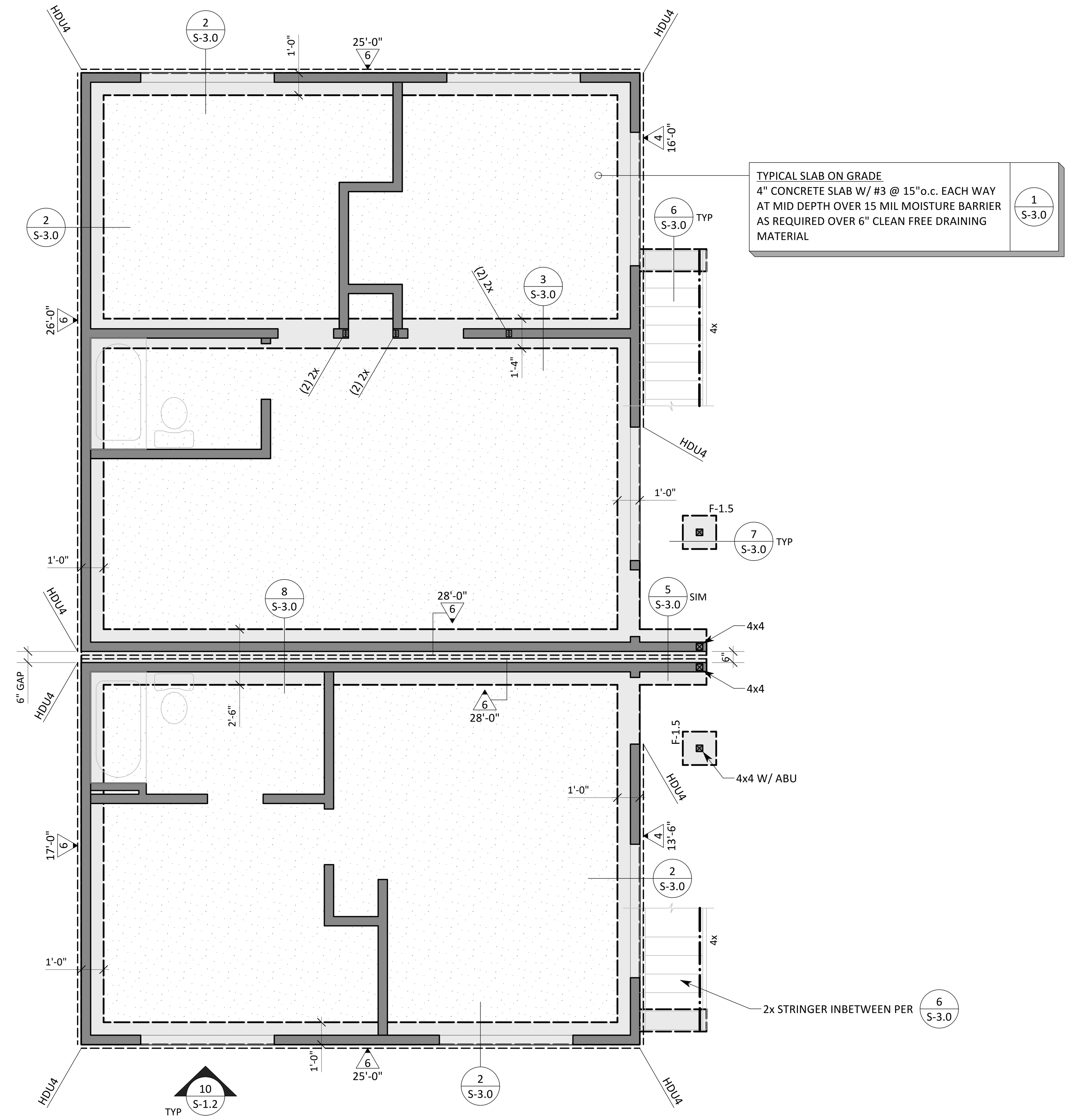

WOOD STUD SCHEDULE		
TYPE (U.0.N.)	STUD	STRUCTURAL BLOCKING
EXTERIOR BEARING	2x4 @ 16"o.c.	AT SHEAR WALL PANEL EDGES
INTERIOR BEARING	2x4 @ 16"o.c.	AT SHEAR WALL PANEL EDGES
INTERIOR NON-BEARING	2x4 @ 16"o.c.	FIRE BLOCKING AS REQD

NOTES:
1. STUD SIZES NOTED ARE A MINIMUM. SEE ARCHTITECTURAL PLANS FOR REQUIRED TUD WIDTHS.
2. DDITIONAL FIRE BLOCKING IS REQUIRED IN ALL WALLS, REFERENCE ARCHITECTURAL RAWINGS.

FOUNDATION PLAN

SCALE: 1/4" = 1'-0"

FOUNDATION NOTES:

1. FOR GENERAL NOTES AND TYPICAL DETAILS SEE SHEET S-1.0 THROUGH S-1.3.
2. DO NOT SCALE STRUCTURAL DRAWINGS.
3. VERIFY ALL DIMENSIONS, ELEVATIONS, FINISH SURFACES, SLOPE, DRAINS, DEPRESSIONS, CURBS, ETC WITH ARCHITECTURAL DRAWINGS PRIOR TO START OF CONSTRUCTION.
4. SEE ARCHITECTURAL FOR EDGE OF SLAB LOCATION.
5. REFER TO ARCHITECTURAL, LANDSCAPE AND ELECTRICAL DRAWINGS FOR ADDITIONAL INFORMATION. IT IS THE CONTRACTORS RESPONSIBILITY TO IDENTIFY ANY DISCREPANCY PRIOR TO POUR AND NOTIFY THE ENGINEER OF RECORD FOR CORRECTIVE MEASURES.
6. THE BASE OF COLUMNS AND SHEARWALLS ORIGINATES AT THE LEVEL WHERE SPECIFIED ON THE PLANS AND CONTINUES TO TOP PLATES AT THE LEVEL ABOVE, U.O.N.

FOUNDATION LEGEND:

- INDICATES FOUNDATION PER PLAN, ANCHOR BEARING WALLS PER 1/S-1.3 WHERE THEY OCCUR, U.O.N.
- INDICATES (N) 2x STUD WALL ABOVE
- INDICATES (E) 2x STUD WALL ABOVE
- 12'-0" 6 — INDICATES SHEARWALL LENGTH AND TYPE PER 4/S-1.2
- F-2.0 — SPREAD FOUNDATION PER 7/S-1.1
- HDU4 — INDICATES HOLDOWN PER 12/S-1.1 U.O.N.

MORGAN STRUCTURAL
www.morganstrucutural.com
(858) 284-4151

REGISTERED PROFESSIONAL ENGINEER
CHRIS M. COBB
No. S 6642
STATE OF CALIFORNIA

IDLEWILD ADUs
3153 IDLEWILD WY
SAN DIEGO, CA 92117

Revisions:

△	Date

Date: 03/08/26
Scale:
Project No: 26.036
Sheet:

S-2.0

FOUNDATION PLAN

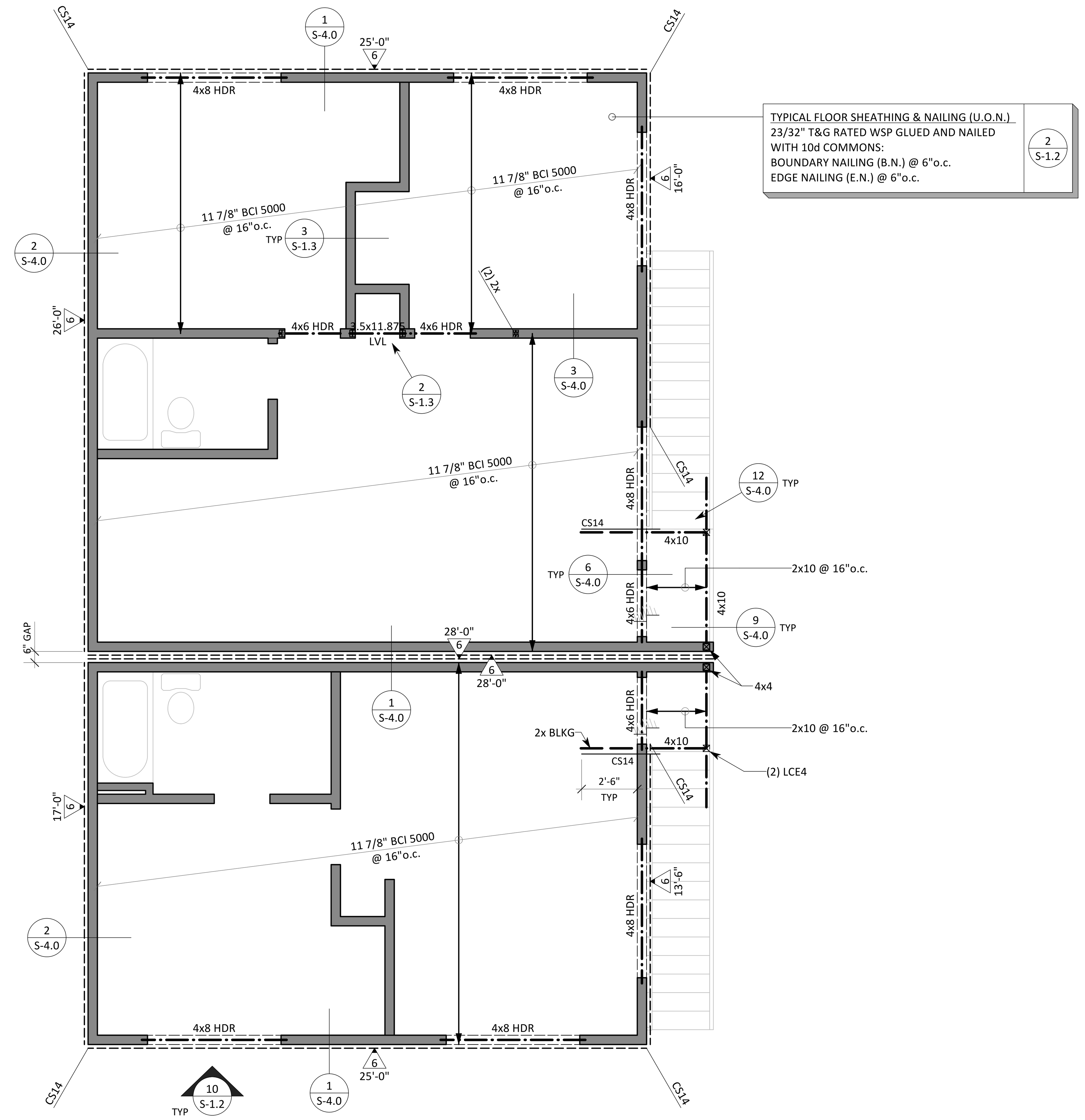

FRAMING PLAN

SCALE: 1/4" = 1'-0"

FRAMING NOTES:

1. FOR GENERAL NOTES AND TYPICAL DETAILS SEE SHEET S-1.0 THROUGH S-1.3.
2. DO NOT SCALE STRUCTURAL DRAWINGS.
3. VERIFY ALL DIMENSIONS, ELEVATIONS, FINISH SURFACES, SLOPE, DRAINS, DEPRESSIONS, CURBS, ETC WITH ARCHITECTURAL DRAWINGS PRIOR TO START OF CONSTRUCTION.
4. REFER TO ARCHITECTURAL, LANDSCAPE AND ELECTRICAL DRAWINGS FOR ADDITIONAL INFORMATION. IT IS THE CONTRACTORS RESPONSIBILITY TO IDENTIFY ANY DISCREPANCY PRIOR TO POUR AND NOTIFY THE ENGINEER OF RECORD FOR CORRECTIVE MEASURES.
5. THE BASE OF COLUMNS AND SHEARWALLS ORIGINATES AT THE LEVEL WHERE SPECIFIED ON THE PLANS AND CONTINUES TO TOP PLATES AT THE LEVEL ABOVE, U.O.N.

CEILING/SOFFIT JOISTS SCHEDULE

LOCATION/FINISH TYPE	SPAN	JOISTS
INTERIOR / GYPSUM	< 8'-0"	2x4 @ 16"o.c.
	< 12'-0"	2x6 @ 16"o.c.
	< 16'-0"	2x8 @ 16"o.c.
EXTERIOR / PLASTER	< 6'-0"	2x4 @ 16"o.c.
	< 10'-0"	2x6 @ 16"o.c.
	< 14'-0"	2x8 @ 16"o.c.
	< 16'-0"	2x10 @ 16"o.c.

FRAMING LEGEND:

- INDICATES BEAM PER PLAN
- HDR — INDICATES HEADER - FRAME PER 9/S-1.2
- INDICATES JOIST PER PLAN
- INDICATES WALL BELOW. BEARING WALLS SHALL HAVE CONTINUOUS DOUBLE TOP PLATES THE FULL LENGTH OF WALL SPLICED PER 6/S-1.2 WHERE REQUIRED UNLESS STRAPING IS NOTED ON PLANS
- INDICATES (N) 2x STUD WALL ABOVE
- INDICATES (E) 2x STUD WALL ABOVE
- CS14 — INDICATES STRAP PER DETAILS AND SCHEDULES: 7/S-1.2 VERTICAL (TIE-DOWN) STRAPS; 12/S-1.2 HORIZONTAL (DRAG) STRAPS

MORGAN STRUCTURAL
www.morganstructural.com
(858) 284-4151
REGISTERED PROFESSIONAL ENGINEER
CHRIS M. COBB
STATE OF CALIFORNIA

IDLEWILD ADUs
3153 IDLEWILD WY
SAN DIEGO, CA 92117

Revisions:	
△	Date

Date: 03/08/26

Scale:

Project No: 26.036

Sheet:

S-2.1

LOWER FLOOR FRAMING PLAN

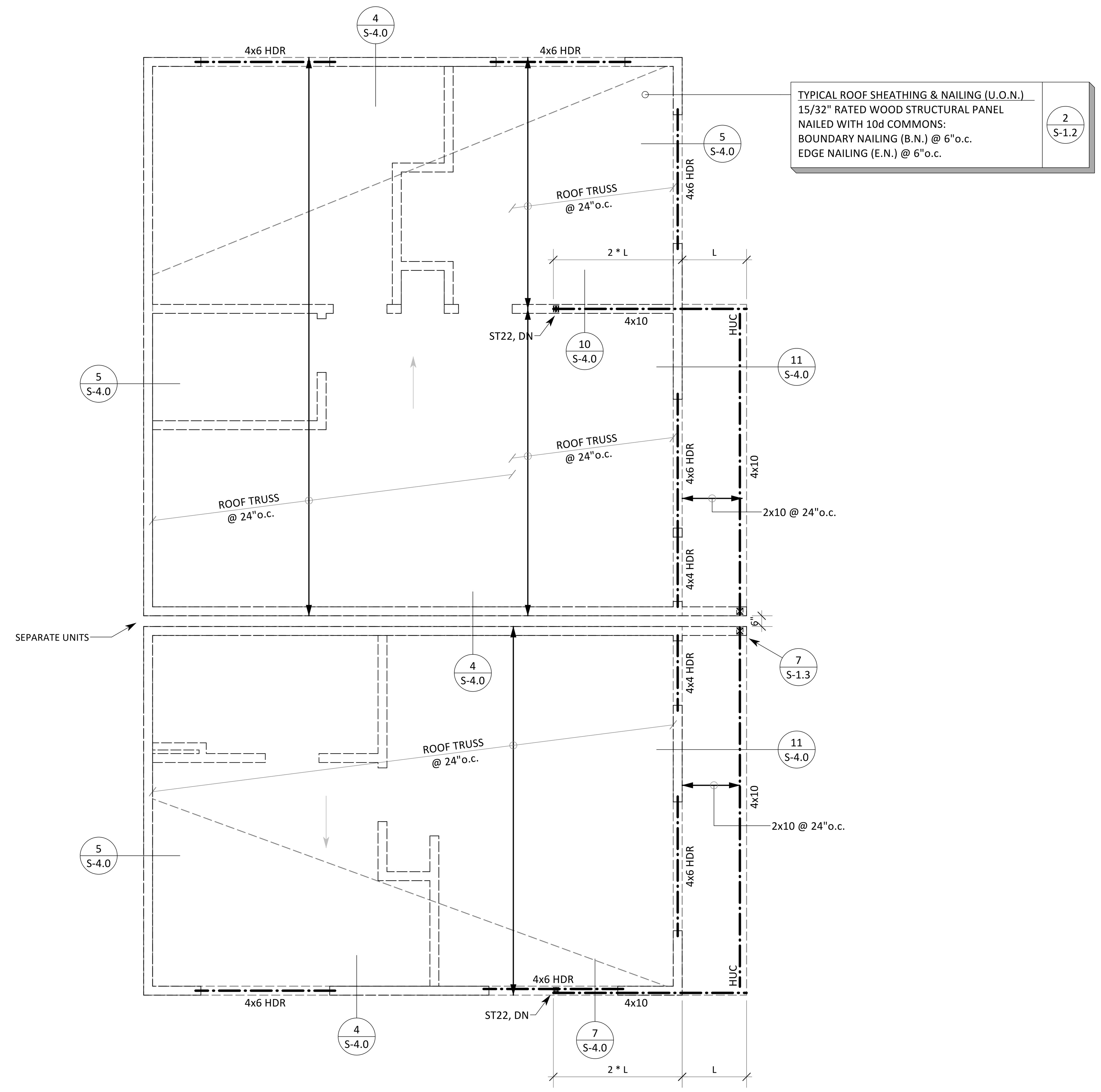

ROOF FRAMING PLAN

SCALE: 1/4" = 1'-0"

FRAMING NOTES:

1. FOR GENERAL NOTES AND TYPICAL DETAILS SEE SHEET S-1.0 THROUGH S-1.3.
2. DO NOT SCALE STRUCTURAL DRAWINGS.
3. VERIFY ALL DIMENSIONS, ELEVATIONS, FINISH SURFACES, SLOPE, DRAINS, DEPRESSIONS, CURBS, ETC WITH ARCHITECTURAL DRAWINGS PRIOR TO START OF CONSTRUCTION.
4. REFER TO ARCHITECTURAL, LANDSCAPE AND ELECTRICAL DRAWINGS FOR ADDITIONAL INFORMATION. IT IS THE CONTRACTORS RESPONSIBILITY TO IDENTIFY ANY DISCREPANCY PRIOR TO POUR AND NOTIFY THE ENGINEER OF RECORD FOR CORRECTIVE MEASURES.

FRAMING LEGEND:

- INDICATES BEAM PER PLAN
- HDR — INDICATES HEADER - FRAME PER 9/S-1.2
- INDICATES FRAMING PER PLAN
- INDICATES WALL BELOW. BEARING WALLS SHALL HAVE CONTINUOUS DOUBLE TOP PLATES THE FULL LENGTH OF WALL SPLICED PER 6/S-1.2 WHERE REQUIRED UNLESS STRAPING IS NOTED ON PLANS

MORGAN STRUCTURAL
www.morganstrucutural.com
(858) 284-4151

REGISTERED PROFESSIONAL ENGINEER
CHRIS M. COBB
No. S 6622
STATE OF CALIFORNIA

IDLEWILD ADUs
3153 IDLEWILD WY
SAN DIEGO, CA 92117

Revisions:	
△	Date

Date: 03/08/26
Scale:
Project No: 26.036
Sheet:

S-2.2

ROOF FRAMING PLAN

10

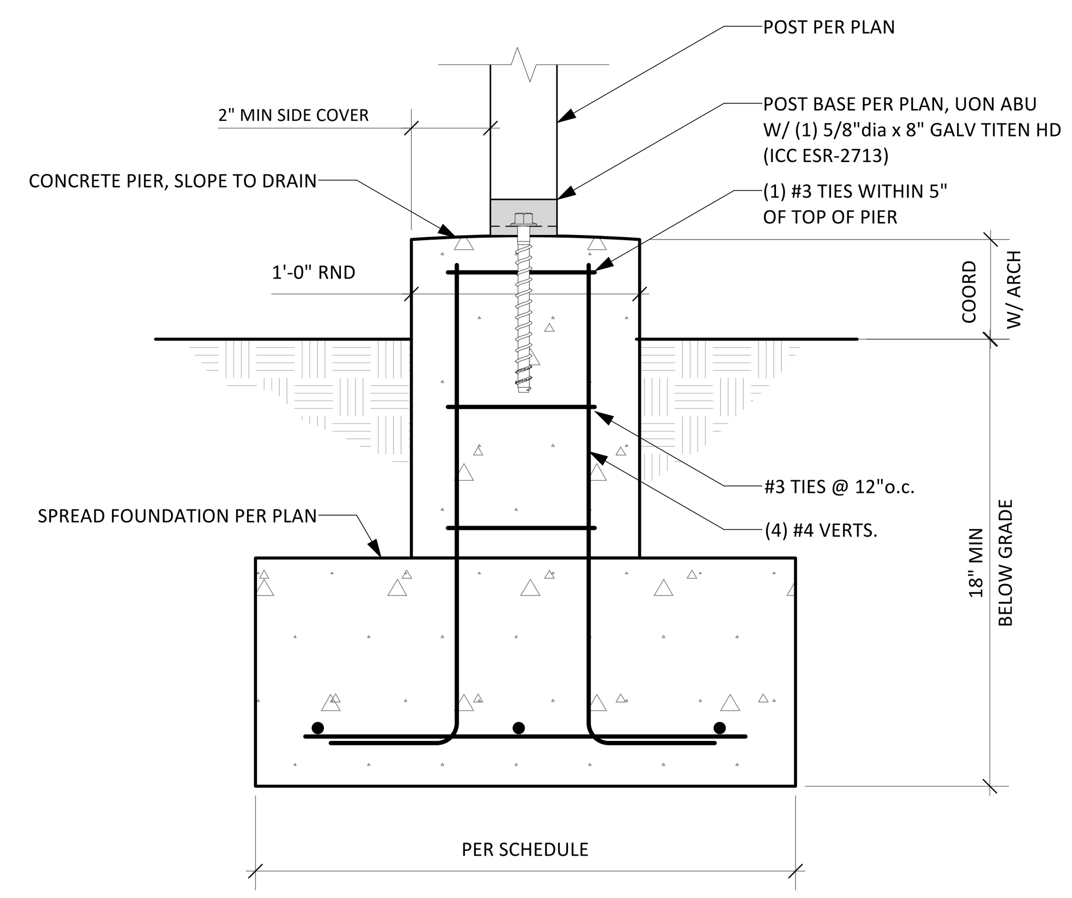

7 TYPICAL PIER FOUNDATION

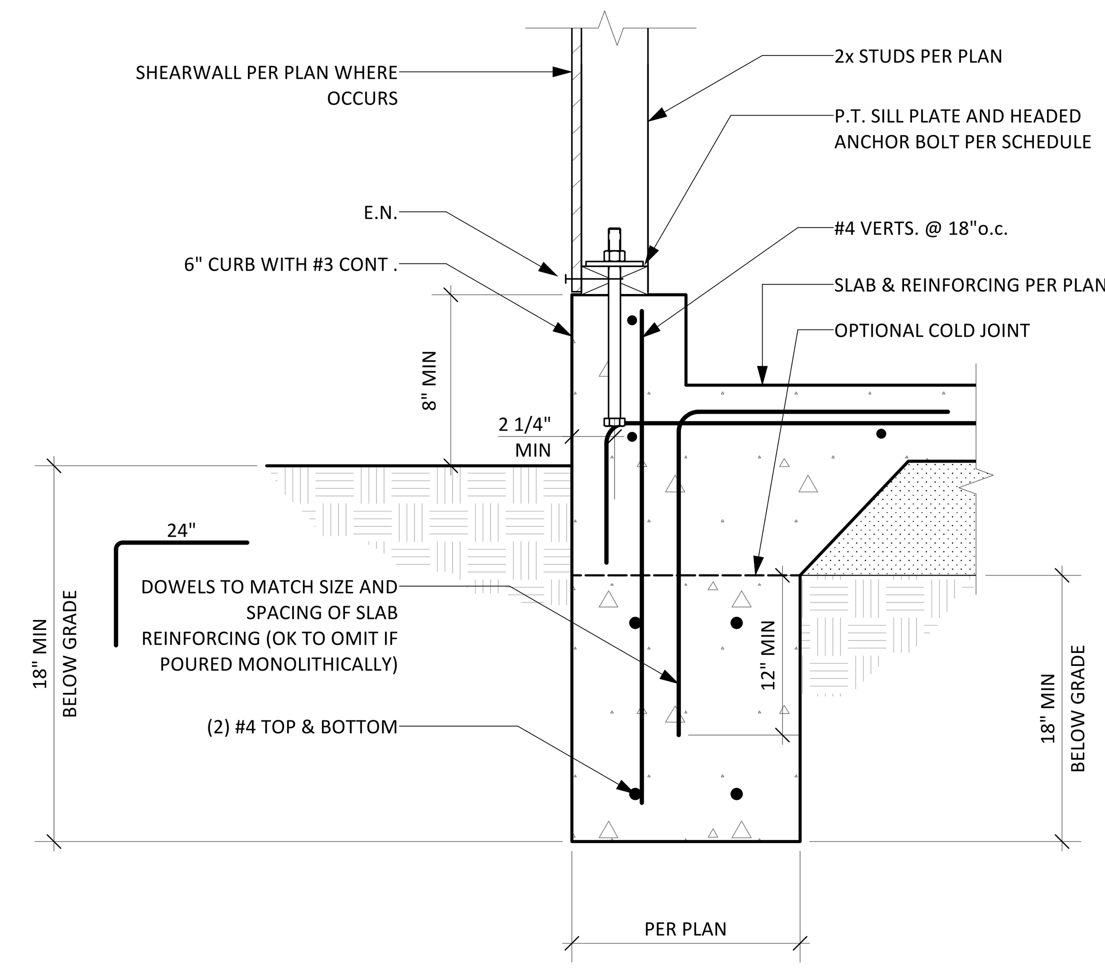

4 TYPICAL EXTERIOR FOUNDATION AT CURB

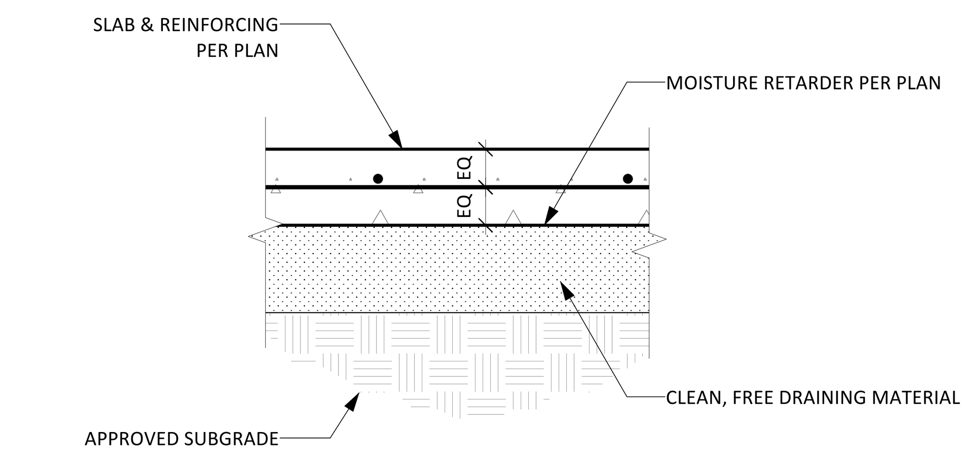

NOTES:

1. PROVIDE CONTROL JOINTS AT 12'-0"o.c. JOINT TO BE 3/16" IN WIDTH AND AT LEAST 1/4 OF THE SLAB THICKNESS IN DEPTH.
2. SAWCUT OR PROVIDING JOINT WITHIN 8 HOURS AFTER STARTING POUR.
3. ALIGN A CONSTRUCTION OR CONTROL JOINT AT RE-ENTRANT SLAB CORNERS, EACH WAY, TYPICAL.

1 CONCRETE SLAB ON GRADE

11

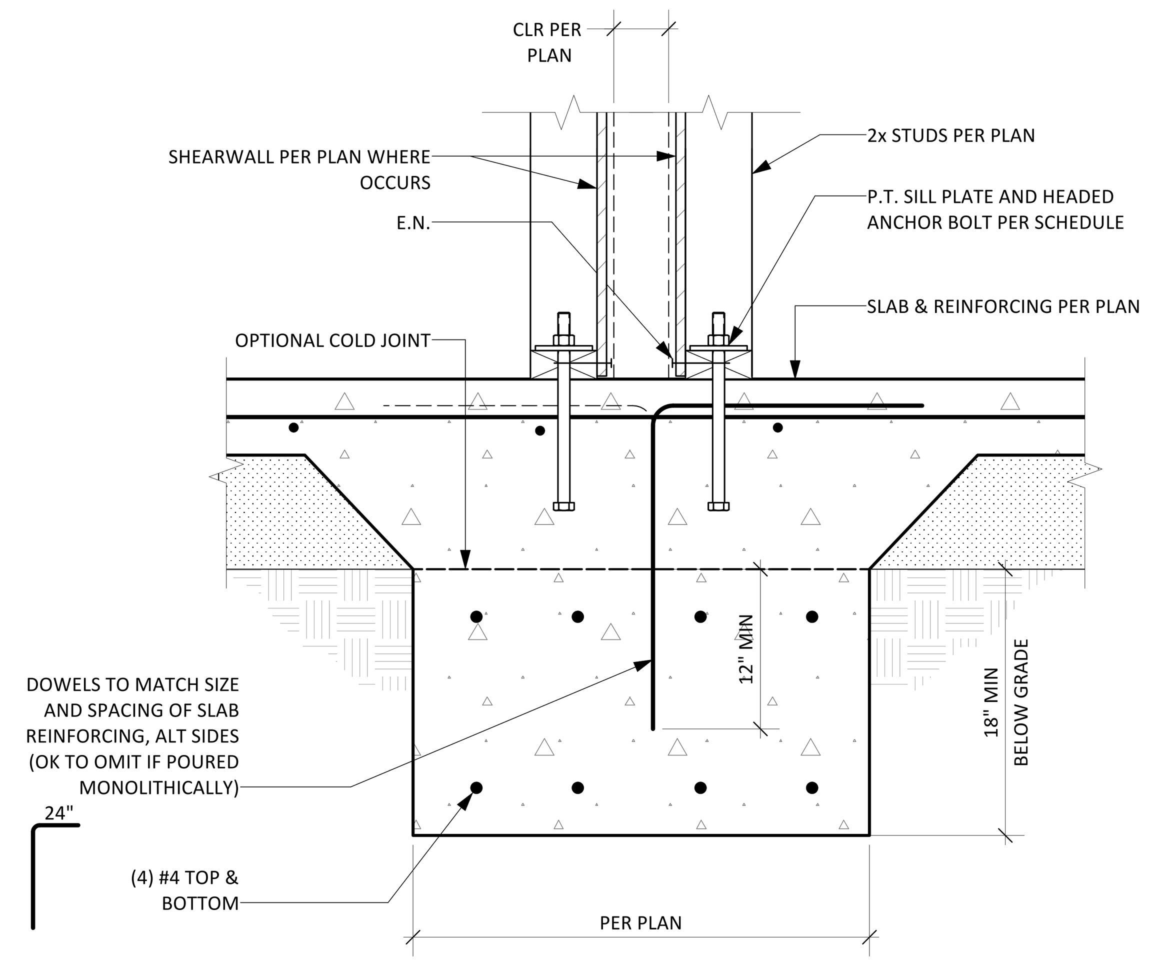

8 TYPICAL INTERIOR FOUNDATION

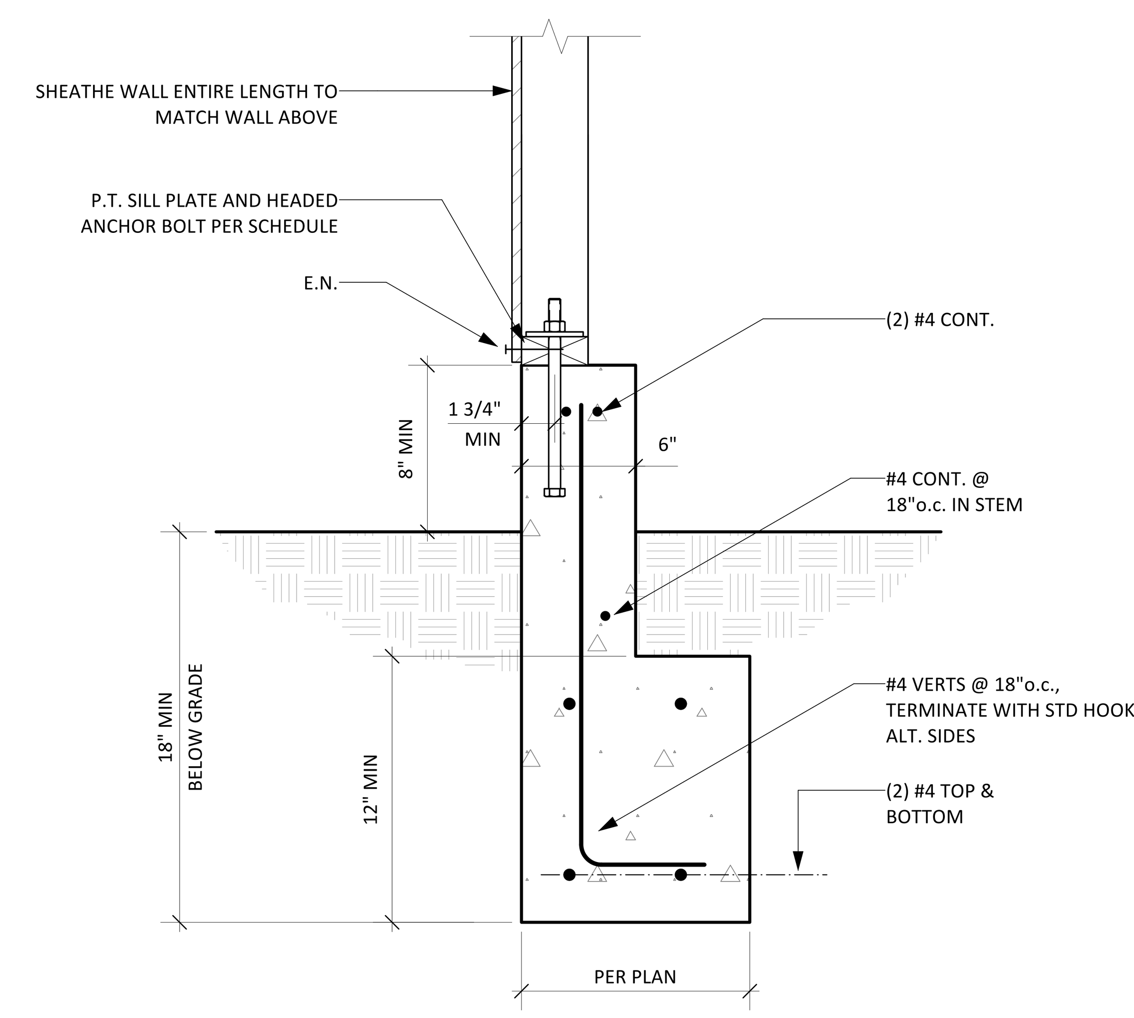

5 EXTERIOR STUD WALL TO CURB

NOTE:
1. REVIEW ARCHITECTURAL PLANS FOR ALIGNMENT OF SHEATHING WITH EDGE OF SLAB.
2. CURB WHERE OCCURS PER: 4 / S-3.0

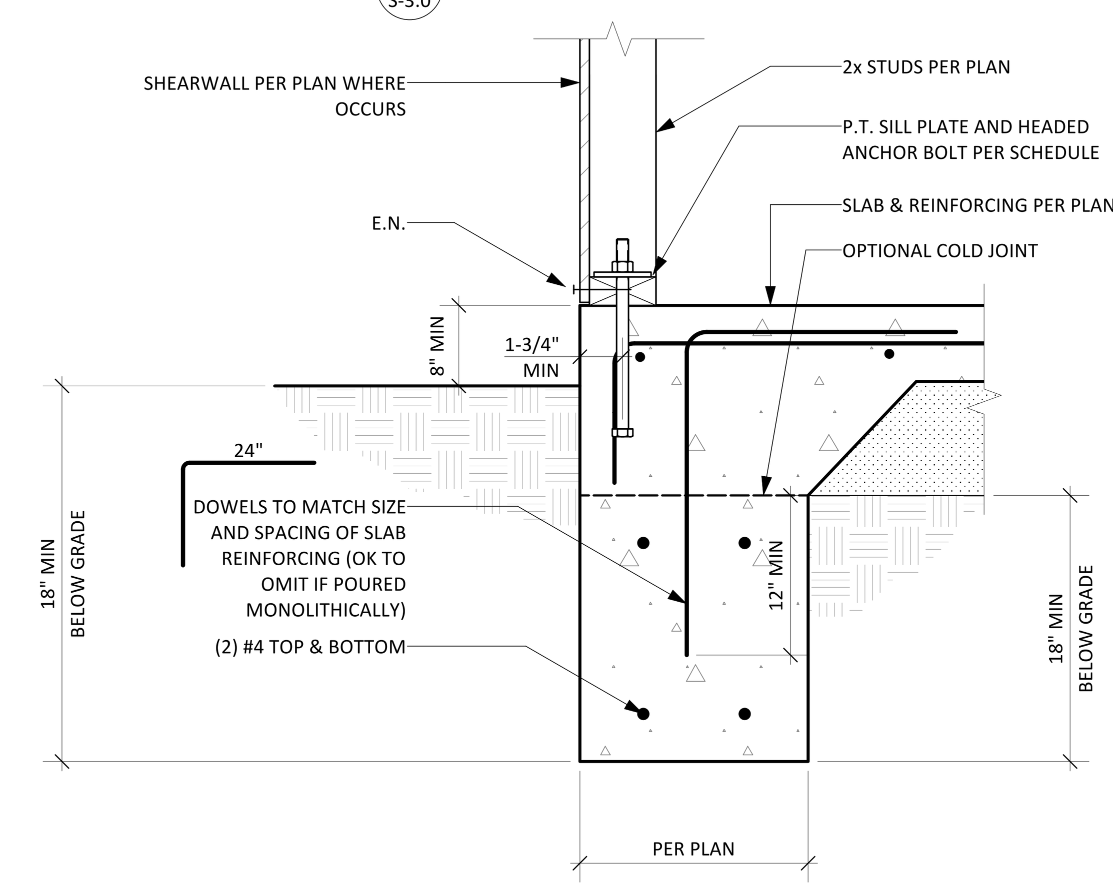

2 TYPICAL EXTERIOR FOUNDATION

12

9

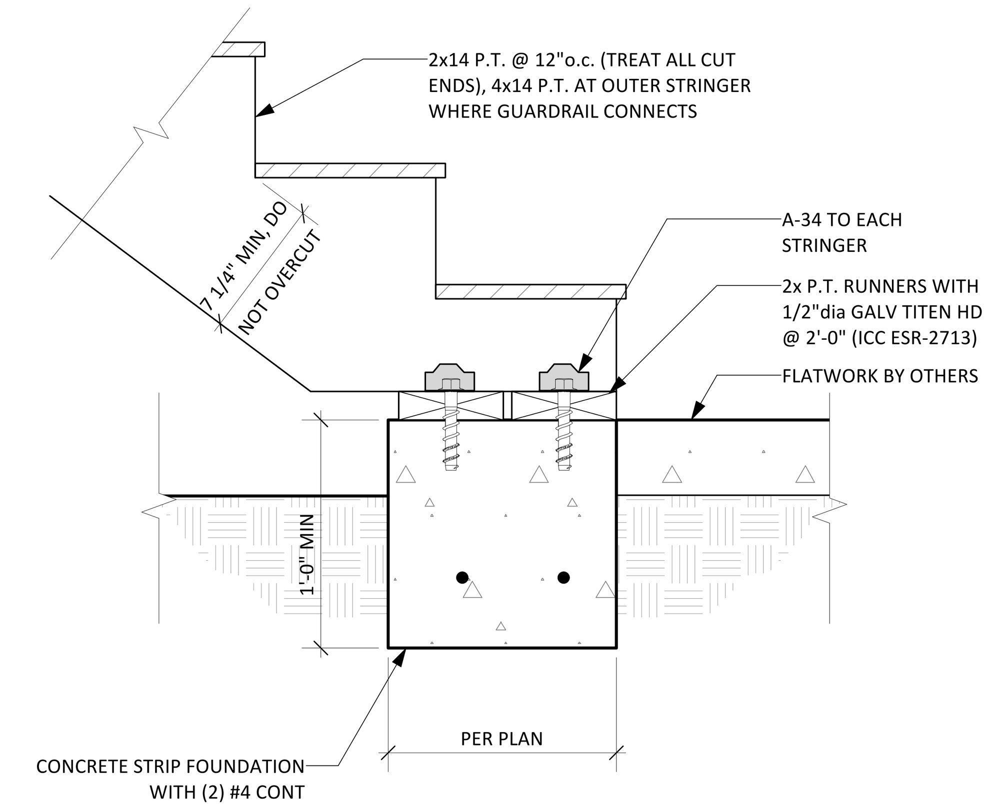

6 EXTERIOR STAIR TO FOOTING

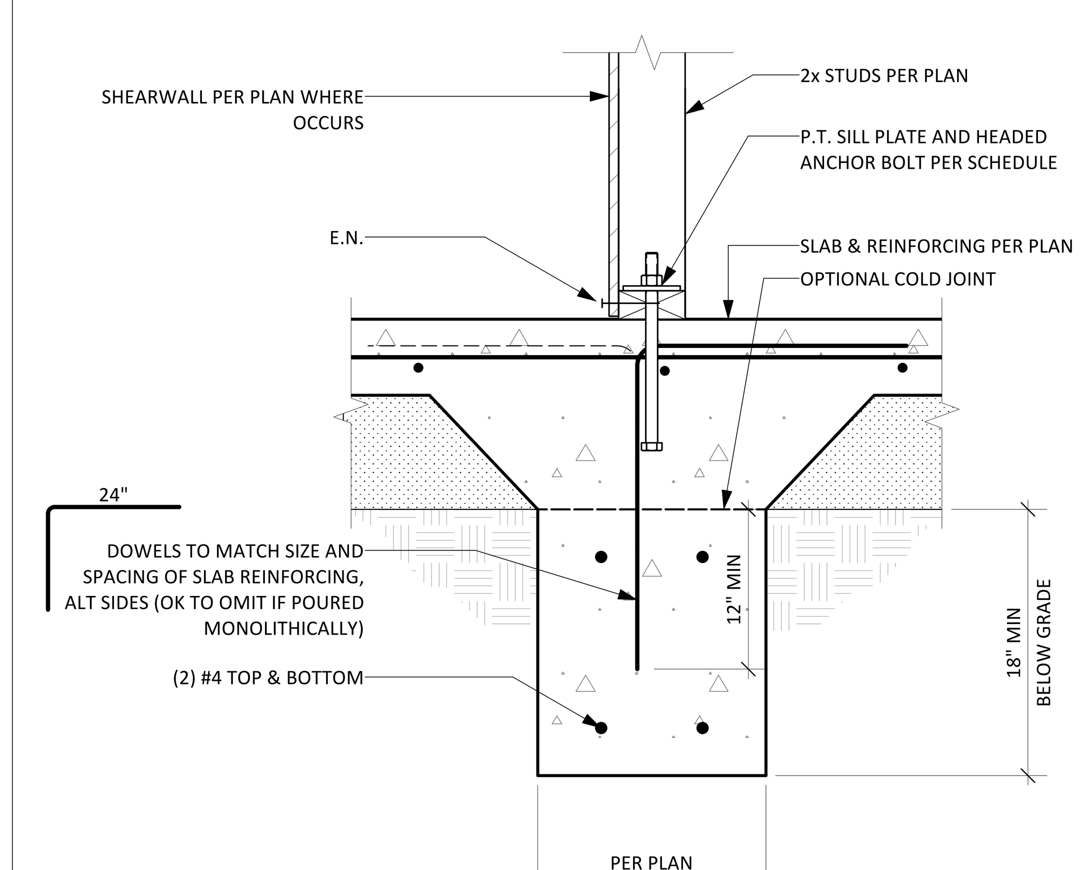

3 TYPICAL INTERIOR FOUNDATION

MORGAN STRUCTURAL
www.morganstructural.com
(858) 284-4151

REGISTERED PROFESSIONAL ENGINEER CHRIS M. COBB No. S 6642 STATE OF CALIFORNIA

IDLEWILD ADUs
3153 IDLEWILD WY
SAN DIEGO, CA 92117

Revisions:

△	Date

Date: 03/08/26
Scale:
Project No: 26.036
Sheet:

S-3.0

STRUCTURAL DETAILS

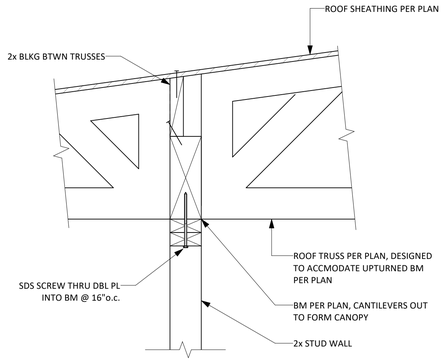

10 CONTINUOUS TRUSS AT UPTURNED BEAM

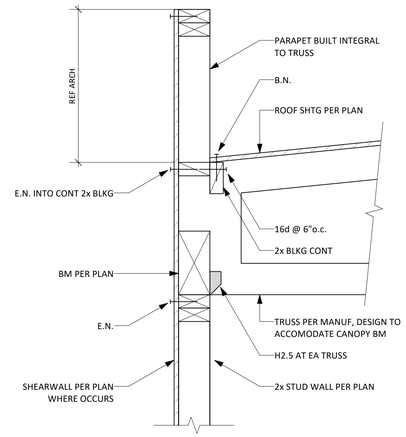

7 ROOF TRUSS PERPENDICULAR TO WALL

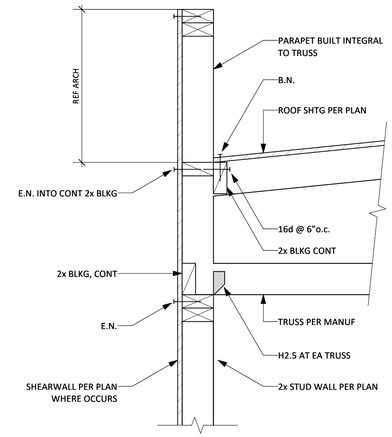

4 ROOF TRUSS PERPENDICULAR TO WALL

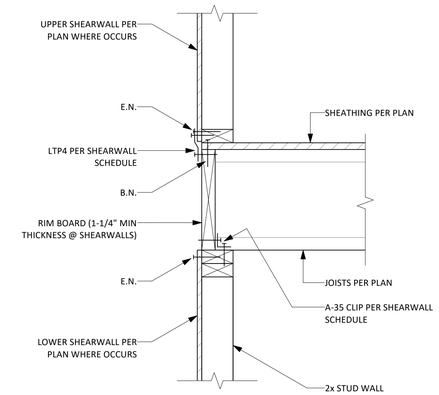

1 TYPICAL FLOOR FRAMING - PERPENDICULAR

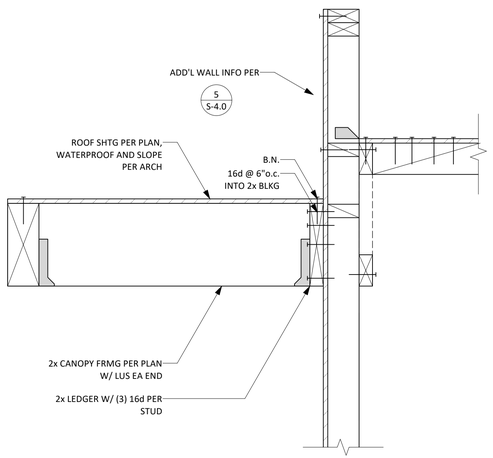

11 EYEBROW CANOPY FRAMING

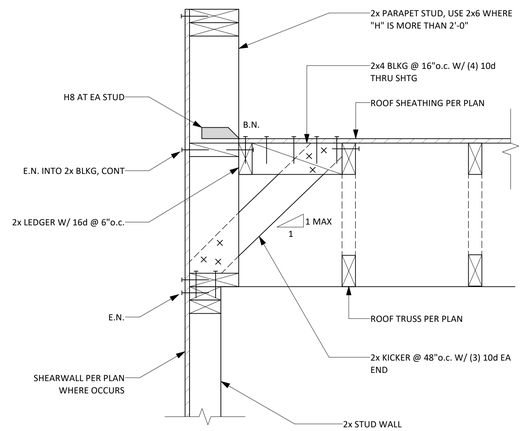

8 ROOF TRUSS PARALLEL TO WALL

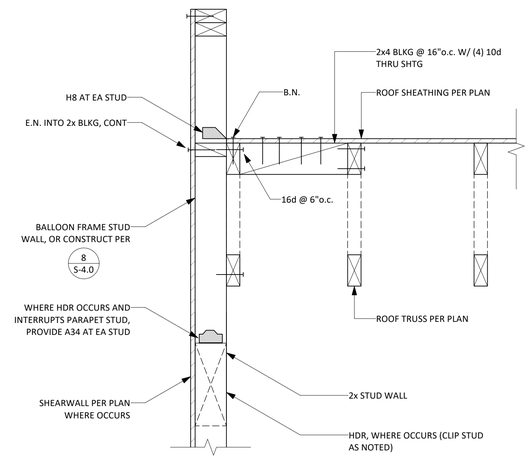

5 ROOF TRUSS PARALLEL TO WALL

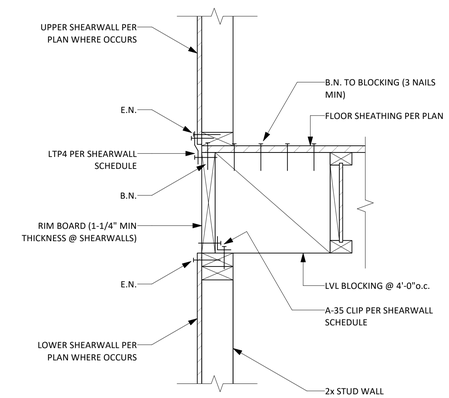

2 TYPICAL FLOOR FRAMING - PARALLEL

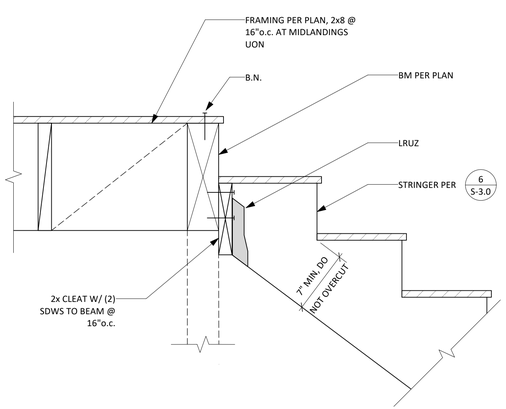

12 STAIR STRINGER TO LANDING BEAM

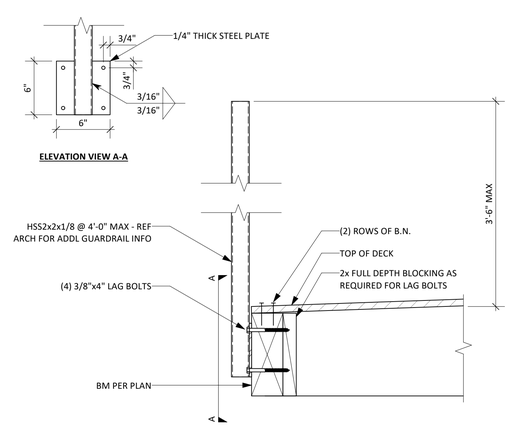

9 STEEL RAILING POST

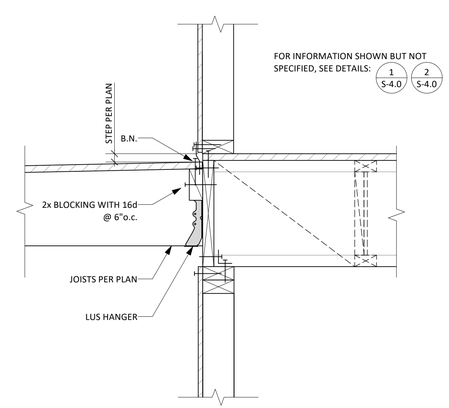

6 STEP IN FRAMING AT CORRIDOR/BALCONY

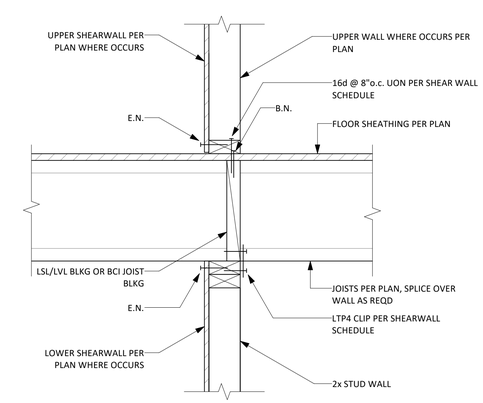

3 INTERIOR WALL - PERPENDICULAR FRAMING

MORGAN STRUCTURAL
(858) 284-4151
www.morganstructural.com

REGISTERED PROFESSIONAL ENGINEER
CHRIS M. CORB
No. S 6[illegible]
STATE OF CALIFORNIA

IDLEWILD ADUs

3153 IDLEWILD WY
SAN DIEGO, CA 92117

Revisions:

	Date

Date: 03/08/26

Scale:

Project No: 26.036

Sheet:

S-4.0

STRUCTURAL DETAILS

2022 Single-Family Residential Mandatory Requirements Summary

NOTE: Single-family residential buildings subject to the Energy Codes must comply with all applicable mandatory measures, regardless of the compliance approach used. Review the respective section for more information. (04/2022)

Building Envelope:

§ 110.6(a)1:	**Air Leakage.** Manufactured fenestration, exterior doors, and exterior pet doors must limit air leakage to 0.3 CFM per square foot or less when tested per NFRC-400, ASTM E283, or AAMA/WDMA/CSA 101/I.S.2/A440-2011. *
§ 110.6(a)5:	**Labeling.** Fenestration products and exterior doors must have a label meeting the requirements of § 10-111(a).
§ 110.6(b):	**Field fabricated exterior doors and fenestration** products must use U-factors and solar heat gain coefficient (SHGC) values from Tables 110.6-A, 110.6-B, or JA4.5 for exterior doors. They must be caulked and/or weather-stripped. *
§ 110.7:	**Air Leakage.** All joints, penetrations, and other openings in the building envelope that are potential sources of air leakage must be caulked, gasketed, or weather stripped.
§ 110.8(a):	**Insulation Certification by Manufacturers.** Insulation must be certified by the Department of Consumer Affairs, Bureau of Household Goods and Services (BHGS).
§ 110.8(g):	**Insulation Requirements for Heated Slab Floors.** Heated slab floors must be insulated per the requirements of § 110.8(g).
§ 110.8(i):	**Roofing Products Solar Reflectance and Thermal Emittance.** The thermal emittance and aged solar reflectance values of the roofing material must meet the requirements of § 110.8(i) and be labeled per §10-113 when the installation of a cool roof is specified on the CF1R.
§ 110.8(j):	**Radiant Barrier.** When required, radiant barriers must have an emittance of 0.05 or less and be certified to the Department of Consumer Affairs.
§ 150.0(a):	**Roof Deck, Ceiling and Rafter Roof Insulation.** Roof decks in newly constructed attics in climate zones 4 and 8-16 area-weighted average U-factor not exceeding U-0.184. Ceiling and rafter roofs minimum R-22 insulation in wood-frame ceiling; or area-weighted average U-factor must not exceed 0.043. Rafter roof alterations minimum R-19 or area-weighted average U-factor of 0.054 or less. Attic access doors must have permanently attached insulation using adhesive or mechanical fasteners. The attic access must be gasketed to prevent air leakage. Insulation must be installed in direct contact with a roof or ceiling which is sealed to limit infiltration and exfiltration as specified in § 110.7, including but not limited to placing insulation either above or below the roof deck or on top of a drywall ceiling. *
§ 150.0(b):	**Loose-fill Insulation.** Loose fill insulation must meet the manufacturer's required density for the labeled R-value.
§ 150.0(c):	**Wall Insulation.** Minimum R-13 insulation in 2x4 inch wood framing wall or have a U-factor of 0.102 or less, or R-20 in 2x6 inch wood framing or have a U-factor of 0.071 or less. Opaque non-framed assemblies must have an overall assembly U-factor not exceeding 0.102. Masonry walls must meet Tables 150.1-A or B. *
§ 150.0(d):	**Raised-floor Insulation.** Minimum R-19 insulation in raised wood framed floor or 0.037 maximum U-factor. *
§ 150.0(f):	**Slab Edge Insulation.** Slab edge insulation must meet all of the following: have a water absorption rate, for the insulation material alone without facings, no greater than 0.3 percent; have a water vapor permeance no greater than 2.0 perm per inch; be protected from physical damage and UV light deterioration; and, when installed as part of a heated slab floor, meet the requirements of § 110.8(g).
§ 150.0(g)1:	**Vapor Retarder.** In climate zones 1 through 16, the earth floor of unvented crawl space must be covered with a Class I or Class II vapor retarder. This requirement also applies to controlled ventilation crawl space for buildings complying with the exception to §150.0(d).
§ 150.0(g)2:	**Vapor Retarder.** In climate zones 14 and 16, a Class I or Class II vapor retarder must be installed on the conditioned space side of all insulation in all exterior walls, vented attics, and unvented attics with air-permeable insulation.
§ 150.0(q):	**Fenestration Products.** Fenestration, including skylights, separating conditioned space from unconditioned space or outdoors must have a maximum U-factor of 0.45; or area-weighted average U-factor of all fenestration must not exceed 0.45. *

Fireplaces, Decorative Gas Appliances, and Gas Log:

§ 110.5(e)	**Pilot Light.** Continuously burning pilot lights are not allowed for indoor and outdoor fireplaces.
§ 150.0(e)1:	**Closable Doors.** Masonry or factory-built fireplaces must have a closable metal or glass door covering the entire opening of the firebox.
§ 150.0(e)2:	**Combustion Intake.** Masonry or factory-built fireplaces must have a combustion outside air intake, which is at least six square inches in area and is equipped with a readily accessible, operable, and tight-fitting damper or combustion-air control device. *
§ 150.0(e)3:	**Flue Damper.** Masonry or factory-built fireplaces must have a flue damper with a readily accessible control. *

Space Conditioning, Water Heating, and Plumbing System:

§ 110.0-§ 110.3:	**Certification.** Heating, ventilation, and air conditioning (HVAC) equipment, water heaters, showerheads, faucets, and all other regulated appliances must be certified by the manufacturer to the California Energy Commission. *
§ 110.2(a):	**HVAC Efficiency.** Equipment must meet the applicable efficiency requirements in Table 110.2-A through Table 110.2-N. *
§ 110.2(b):	**Controls for Heat Pumps with Supplementary Electric Resistance Heaters.** Heat pumps with supplementary electric resistance heaters must have controls that prevent supplementary heater operation when the heating load can be met by the heat pump alone; and in which the cut-on temperature for compression heating is higher than the cut-on temperature for supplementary heating, and the cut-off temperature for compression heating is higher than the cut-off temperature for supplementary heating. *
§ 110.2(c):	**Thermostats.** All heating or cooling systems not controlled by a central energy management control system (EMCS) must have a setback thermostat. *
§ 110.3(c)3:	**Insulation.** Unfired service water heater storage tanks and solar water-heating backup tanks must have adequate insulation, or tank surface heat loss rating.
§ 110.3(c)6:	**Isolation Valves.** Instantaneous water heaters with an input rating greater than 6.8 kBtu per hour (2 kW) must have isolation valves with hose bibbs or other fittings on both cold and hot water lines to allow for flushing the water heater when the valves are closed.

2022 Single-Family Residential Mandatory Requirements Summary

§ 110.5:	**Pilot Lights.** Continuously burning pilot lights are prohibited for natural gas: fan-type central furnaces; household cooking appliances (except appliances without an electrical supply voltage connection with pilot lights that consume less than 150 Btu per hour); and pool and spa heaters. *
§ 150.0(h)1:	**Building Cooling and Heating Loads.** Heating and/or cooling loads are calculated in accordance with the ASHRAE Handbook, Equipment Volume, Applications Volume, and Fundamentals Volume; the SMACNA Residential Comfort System Installation Standards Manual; or the ACCA Manual J using design conditions specified in § 150.0(h)2.
§ 150.0(h)3A:	**Clearances.** Air conditioner and heat pump outdoor condensing units must have a clearance of at least five feet from the outlet of any dryer.
§ 150.0(h)3B:	**Liquid Line Drier.** Air conditioners and heat pump systems must be equipped with liquid line filter driers if required, as specified by the manufacturer's instructions.
§ 150.0(j)1:	**Water Piping, Solar Water-heating System Piping, and Space Conditioning System Line Insulation.** All domestic hot water piping must be insulated as specified in § 609.11 of the California Plumbing Code. *
§ 150.0(j)2:	**Insulation Protection.** Piping insulation must be protected from damage, including that due to sunlight, moisture, equipment maintenance, and wind as required by §120.3(b). Insulation exposed to weather must be water retardant and protected from UV light (no adhesive tapes). Insulation covering chilled water piping and refrigerant suction piping located outside the conditioned space must include, or be protected by, a Class I or Class II vapor retarder. Pipe insulation buried below grade must be installed in a waterproof and non-crushable casing or sleeve.
§ 150.0(n)1:	**Gas or Propane Water Heating Systems.** Systems using gas or propane water heaters to serve individual dwelling units must designate a space at least 2.5' x 2.5' x 7' suitable for the future installation of a heat pump water heater, and meet electrical and plumbing requirements, based on the distance between this designated space and the water heater location; and a condensate drain no more than 2" higher than the base of the water heater
§ 150.0(n)3:	**Solar Water-heating Systems.** Solar water-heating systems and collectors must be certified and rated by the Solar Rating and Certification Corporation (SRCC), the International Association of Plumbing and Mechanical Officials, Research and Testing (IAPMO R&T), or by a listing agency that is approved by the executive director.

Ducts and Fans:

§ 110.8(d)3:	**Ducts.** Insulation installed on an existing space-conditioning duct must comply with § 604.0 of the California Mechanical Code (CMC). If a contractor installs the insulation, the contractor must certify to the customer, in writing, that the insulation meets this requirement.
§ 150.0(m)1:	**CMC Compliance.** All air-distribution system ducts and plenums must meet CMC §§ 601.0-605.0 and ANSI/SMACNA-006-2006 HVAC Duct Construction Standards Metal and Flexible 3rd Edition. Portions of supply-air and return-air ducts and plenums must be insulated to R-6.0 or higher; ducts located entirely in conditioned space as confirmed through field verification and diagnostic testing (RA3.1.4.3.8) do not require insulation. Connections of metal ducts and inner core of flexible ducts must be mechanically fastened. Openings must be sealed with mastic, tape, or other duct-closure system that meets the applicable UL requirements, or aerosol sealant that meets UL 723. The combination of mastic and either mesh or tape must be used to seal openings greater than ¼", If mastic or tape is used. Building cavities, air handler support platforms, and plenums designed or constructed with materials other than sealed sheet metal, duct board or flexible duct must not be used to convey conditioned air. Building cavities and support platforms may contain ducts; ducts installed in these spaces must not be compressed. *
§ 150.0(m)2:	**Factory-Fabricated Duct Systems.** Factory-fabricated duct systems must comply with applicable requirements for duct construction, connections, and closures; joints and seams of duct systems and their components must not be sealed with cloth back rubber adhesive duct tapes unless such tape is used in combination with mastic and draw bands.
§ 150.0(m)3:	**Field-Fabricated Duct Systems.** Field-fabricated duct systems must comply with applicable requirements for: pressure-sensitive tapes, mastics, sealants, and other requirements specified for duct construction.
§ 150.0(m)7:	**Backdraft Damper.** Fan systems that exchange air between the conditioned space and outdoors must have backdraft or automatic dampers.
§ 150.0(m)8:	**Gravity Ventilation Dampers.** Gravity ventilating systems serving conditioned space must have either automatic or readily accessible, manually operated dampers in all openings to the outside, except combustion inlet and outlet air openings and elevator shaft vents.
§ 150.0(m)9:	**Protection of Insulation.** Insulation must be protected from damage due tosunlight, moisture, equipment maintenance, and wind. Insulation exposed to weather must be suitable for outdoor service (e.g., protected by aluminum, sheet metal, painted canvas, or plastic cover). Cellular foam insulation must be protected as above or painted with a water retardant and solar radiation-resistant coating.
§ 150.0(m)10:	**Porous Inner Core Flex Duct.** Porous inner cores of flex ducts must have a non-porous layer or air barrier between the inner core and outer vapor barrier.
§ 150.0(m)11:	**Duct System Sealing and Leakage Test.** When space conditioning systems use forced air duct systems to supply conditioned air to an occupiable space, the ducts must be sealed and duct leakage tested, as confirmed through field verification and diagnostic testing, in accordance with Reference Residential Appendix RA3.1.
§ 150.0(m)12:	**Air Filtration.** Space conditioning systems with ducts exceeding 10 feet and the supply side of ventilation systems must have MERV 13 or equivalent filters. Filters for space conditioning systems must have a two inch depth or can be one inch if sized per Equation 150.0-A. Clean-filter pressure drop and labeling must meet the requirements in §150.0(m)12. Filters must be accessible for regular service. Filter racks or grilles must use gaskets, sealing, or other means to close gaps around the inserted filters to and prevents air from bypassing the filter. *

2022 Single-Family Residential Mandatory Requirements Summary

§ 150.0(m)13:	**Space Conditioning System Airflow Rate and Fan Efficacy.** Space conditioning systems that use ducts to supply cooling must have a hole for the placement of a static pressure probe, or a permanently installed static pressure probe in the supply plenum. Airflow must be ≥ 350 CFM per ton of nominal cooling capacity, and an air-handling unit fan efficacy ≤ 0.45 watts per CFM for gas furnace air handlers and ≤ 0.58 watts per CFM for all others. Small duct high velocity systems must provide an airflow ≥ 250 CFM per ton of nominal cooling capacity, and an air-handling unit fan efficacy ≤ 0.62 watts per CFM. Field verification testing is required in accordance with Reference Residential Appendix RA3.3. *

Ventilation and Indoor Air Quality:

§ 150.0(o)1:	**Requirements for Ventilation and Indoor Air Quality.** All dwelling units must meet the requirements of ASHRAE Standard 62.2, Ventilation and Acceptable Indoor Air Quality in Residential Buildings subject to the amendments specified in § 150.0(o)1. *
§ 150.0(o)1B:	**Central Fan Integrated (CFI) Ventilation Systems.** Continuous operation of CFI air handlers is not allowed to provide the whole-dwelling unit ventilation airflow required per §150.0(o)1C. A motorized damper(s) must be installed on the ventilation duct(s) that prevents all airflow through the space conditioning duct system when the damper(s) is closed andcontrolled per §150.0(o)1Biii&iv. CFI ventilation systems must have controls that track outdoor air ventilation run time, and either open or close the motorized damper(s) for compliance with §150.0(o)1C.
§ 150.0(o)1C:	**Whole-Dwelling Unit Mechanical Ventilation for Single-Family Detached and townhouses .** Single-family detached dwelling units, and attached dwelling units not sharing ceilings or floors with other dwelling units, occupiable spaces, public garages, or commercial spaces must have mechanical ventilation airflow specified in § 150.0(o)1Ci-iii.
§ 150.0(o)1G:	**Local Mechanical Exhaust.** Kitchens and bathrooms must have local mechanical exhaust; nonenclosed kitchens must have demand-controlled exhaust system meeting requirements of §150.0(o)1Giii,enclosed kitchens and bathrooms can use demand-controlled or continuous exhaust meeting §150.0(o)1Giii-iv. Airflow must be measured by the installer per §150.0(o)1Gv, and rated for sound per §150.0(o)1Gvi. *
§ 150.0(o)1H&I:	**Airflow Measurement and Sound Ratings of Whole-Dwelling Unit Ventilation Systems.** The airflow required per § 150.0(o)1C must be measured by using a flow hood, flow grid, or other airflow measuring device at the fan's inlet or outlet terminals/grilles per Reference Residential Appendix RA3.7. Whole-Dwelling unit ventilation systems must be rated for sound per ASHRAE 62.2 §7.2 at no less than the minimum airflow rate required by §150.0(o)1C.
§ 150.0(o)2:	**Field Verification and Diagnostic Testing.** Whole-Dwelling Unit ventilation airflow, vented range hood airflow and sound rating, and HRV and ERV fan efficacy must be verified in accordance with Reference Residential Appendix RA3.7. Vented range hoods must be verified per Reference Residential Appendix RA3.7.4.3 to confirm if it is rated by HVI or AHAM to comply with the airflow rates and sound requirements per §150.0(o)1G

Pool and Spa Systems and Equipment:

§ 110.4(a):	**Certification by Manufacturers.** Any pool or spa heating system or equipment must be certified to have all of the following: compliance with the Appliance Efficiency Regulations and listing in MAEDbS; an on-off switch mounted outside of the heater that allows shutting off the heater without adjusting the thermostat setting; a permanent weatherproof plate or card with operating instructions; and must not use electric resistance heating. *
§ 110.4(b)1:	**Piping.** Any pool or spa heating system or equipment must be installed with at least 36 inches of pipe between the filter and the heater, or dedicated suction and return lines, or built-in or built-up connections to allow for future solar heating.
§ 110.4(b)2:	**Covers.** Outdoor pools or spas that have a heat pump or gas heater must have a cover.
§ 110.4(b)3:	**Directional Inlets and Time Switches for Pools.** Pools must have directional inlets that adequately mix the pool water, and a time switch that will allow all pumps to be set or programmed to run only during off-peak electric demand periods.
§ 110.5:	**Pilot Light.** Natural gas pool and spa heaters must not have a continuously burning pilot light.
§ 150.0(p):	**Pool Systems and Equipment Installation.** Residential pool systems or equipment must meet the specified requirements for pump sizing, flow rate, piping, filters, and valves. *

Lighting:

§ 110.9:	**Lighting Controls and Components.** All lighting control devices and systems, ballasts, and luminaires must meet the applicable requirements of § 110.9. *
§ 150.0(k)1A:	**Luminaire Efficacy.** All installed luminaires must meet the requirements in Table 150.0-A, except lighting integral to exhaust fans, kitchen range hoods, bath vanity mirrors, and garage door openers; navigation lighting less than 5 watts; and lighting internal to drawers, cabinets, and linen closets with an efficacy of at least 45 lumens per watt.
§ 150.0(k)1B:	**Screw based luminaires.** Screw based luminaires must contain lamps that comply with Reference Joint Appendix JA8. *
§ 150.0(k)1C:	**Recessed Downlight Luminaires in Ceilings.** Luminaires recessed into ceilings must not contain screw based sockets, must be airtight, and must be sealed with a gasket or caulk. California Electrical Code § 410.116 must also be met.
§ 150.0(k)1D:	**Light Sources in Enclosed or Recessed Luminaires.** Lamps and other separable light sources that are not compliant with the JA8 elevated temperature requirements, including marking requirements, must not be installed in enclosed or recessed luminaires.
§ 150.0(k)1E:	**Blank Electrical Boxes.** The number of electrical boxes that are more than five feet above the finished floor and do not contain a luminaire or other device shall be no more than the number of bedrooms. These boxes must be served by a dimmer, vacancy sensor control, low voltage wiring, or fan speed control.
§ 150.0(k)1F:	**Lighting Integral to Exhaust Fans.** Lighting integral to exhaust fans (except when installed by the manufacturer in kitchen exhaust hoods) must meet the applicable requirements of § 150.0(k). *

2022 Single-Family Residential Mandatory Requirements Summary

§ 150.0(k)1G:	**Screw based luminaires.** Screw based luminaires must contain lamps that comply with Reference Joint Appendix JA8. *
§ 150.0(k)1H:	**Light Sources in Enclosed or Recessed Luminaires.** Lamps and other separable light sources that are not compliant with the JA8 elevated temperature requirements, including marking requirements, must not be installed in enclosed or recessed luminaires.
§ 150.0(k)1I:	**Light Sources in Drawers, Cabinets, and Linen Closets.** Light sources internal to drawers, cabinetry or linen closets are not required to comply with Table 150.0-A or be controlled by vacancy sensors provided that they are rated to consume no more than 5 watts of power, emit no more than 150 lumens, and are equipped with controls that automatically turn the lighting off when the drawer, cabinet or linen closet is closed.
§ 150.0(k)2A:	**Interior Switches and Controls.** All forward phase cut dimmers used with LED light sources must comply with NEMA SSL 7A.
§ 150.0(k)2B:	**Interior Switches and Controls.** Exhaust fans must be controlled separately from lighting systems. *
§ 150.0(k)2A:	**Accessible Controls.** Lighting must have readily accessible wall-mounted controls that allow the lighting to be manually turned on and off. *
§ 150.0(k)2B:	**Multiple Controls.** Controls must not bypass a dimmer, occupant sensor, or vacancy sensor function if the dimmer or sensor is installed to comply with § 150.0(k).
§ 150.0(k)2C:	**Mandatory Requirements.** Lighting controls must comply with the applicable requirements of § 110.9.
§ 150.0(k)2D:	**Energy Management Control Systems.** An energy management control system (EMCS) may be used to comply with dimming, occupancy, and control requirements if it provides the functionality of the specified control per § 110.9 and the physical controls specified in § 150.0(k)2A.
§ 150.0(k)2E:	**Automatic Shutoff Controls.** In bathrooms, garages, laundry rooms, utility rooms and walk-in closets, at least one installed luminaire must be controlled by an occupancy or vacancy sensor providing automatic-off functionality. Lighting inside drawers and cabinets with opaque fronts or doors must have controls that turn the light off when the drawer or door is closed.
§ 150.0(k)2F:	**Dimmers.** Lighting in habitable spaces (e.g., living rooms, dining rooms, kitchens, and bedrooms) must have readily accessible wall-mounted dimming controls that allow the lighting to be manually adjusted up and down. Forward phase cut dimmers controlling LED light sources in these spaces must comply with NEMA SSL 7A.
§ 150.0(k)2K:	**Independent controls.** Integrated lighting of exhaust fans shall be controlled independently from the fans. Lighting under cabinets or shelves, lighting in display cabinets, and switched outlets must be controlled separately from ceiling-installed lighting.
§ 150.0(k)3A:	**Residential Outdoor Lighting.** For single-family residential buildings, outdoor lighting permanently mounted to a residential building, or to other buildings on the same lot, must have a manual on/off switch and either a photocell and motion sensor or automatic time switch control) or an astronomical time clock. An energy management control system that provides the specified control functionality and meets all applicable requirements may be used to meet these requirements.
§ 150.0(k)4:	**Internally illuminated address signs.** Internally illuminated address signs must either comply with § 140.8 or consume no more than 5 watts of power.
§ 150.0(k)5:	**Residential Garages for Eight or More Vehicles.** Lighting for residential parking garages for eight or more vehicles must comply with the applicable requirements for nonresidential garages in §§ 110.9, 130.0, 130.1, 130.4, 140.6, and 141.0.

Solar Readiness:

§ 110.10(a)1:	**Single-family Residences.** Single-family residences located in subdivisions with 10 or more single-family residences and where the application for a tentative subdivision map for the residences has been deemed complete and approved by the enforcement agency, which do not have a photovoltaic system installed, must comply with the requirements of § 110.10(b)-(e).
§110.10(b)1A:	**Minimum Solar Zone Area.** The solar zone must have a minimum total area as described below. The solar zone must comply with access, pathway, smoke ventilation, and spacing requirements as specified in Title 24, Part 9 or other parts of Title 24 or in any requirements adopted by a local jurisdiction. The solar zone total area must be comprised of areas that have no dimension less than 5 feet and are no less than 80 square feet each for buildings with roof areas less than or equal to 10,000 square feet or no less than 160 square feet each for buildings with roof areas greater than 10,000 square feet. For single-family residences, the solar zone must be located on the roof or overhang of the building and have a total area no less than 250 square feet. *
§ 110.10(b)2:	**Azimuth.** All sections of the solar zone located on steep-sloped roofs must have an azimuth between 90-300° of true north.
§ 110.10(b)3A:	**Shading.** The solar zone must not contain any obstructions, including but not limited to: vents, chimneys, architectural features, and roof mounted equipment. *
§ 110.10(b)3B:	**Shading.** Any obstruction located on the roof or any other part of the building that projects above a solar zone must be located at least twice the horizontal distance of the height difference between the highest point of the obstruction and the horizontal projection of the nearest point of the solar zone, measured in the vertical plane. *
§ 110.10(b)4:	**Structural Design Loads on Construction Documents.** For areas of the roof designated as a solar zone, the structural design loads for roof dead load and roof live load must be clearly indicated on the construction documents.
§ 110.10(c):	**Interconnection Pathways.** The construction documents must indicate: a location reserved for inverters and metering equipment and a pathway reserved for routing of conduit from the solar zone to the point of interconnection with the electrical service; and for single-family residences and central water-heating systems, a pathway reserved for routing plumbing from the solar zone to the water-heating system.
§ 110.10(d):	**Documentation.** A copy of the construction documents or a comparable document indicating the information from § 110.10(b)-(c) must be provided to the occupant.
§ 110.10(e)1:	**Main Electrical Service Panel.** The main electrical service panel must have a minimum busbar rating of 200 amps.
§ 110.10(e)2:	**Main Electrical Service Panel.** The main electrical service panel must have a reserved space to allow for the installation of a double pole circuit breaker for a future solar electric installation. The reserved space must be permanently marked as "For Future Solar Electric."

Electric and Energy Storage Ready:

2022 Single-Family Residential Mandatory Requirements Summary

§ 150.0(s)	**Energy Storage System (ESS) Ready.** All single-family residences must meet all of the following: Either ESS-ready interconnection equipment with backed up capacity of 60 amps or more and four or more ESS supplied branch circuits, or a dedicated raceway from the main service to a subpanel that supplies the branch circuits in § 150.0(s); at least four branch circuits must be identified and have their source collocated at a single panelboard suitable to be supplied by the ESS, with one circuit supplying the refrigerator, one lighting circuit near the primary exit, and one circuit supplying a sleeping room receptacle outlet; main panelboard must have a minimum busbar rating of 225 amps; sufficient space must be reserved to allow future installation of a system isolation equipment/transfer switch within 3' of the main panelboard, with raceways installed between the panelboard and the switch location to allow the connection of backup power source.
§ 150.0(t)	**Heat Pump Space Heater Ready.** Systems using gas or propane furnaces to serve individual dwelling units must include: A dedicated unobstructed 240V branch circuit wiring installed within 3' of the furnace with circuit conductors rated at least 30 amps with the blank cover identified as "240V ready;" and a reserved main electrical service panel space to allow for the installation of a double pole circuit breaker permanently marked as "For Future 240V use."
§ 150.0(u)	**Electric Cooktop Ready.** Systems using gas or propane cooktop to serve individual dwelling units must include: A dedicated unobstructed 240V branch circuit wiring installed within 3' of the cooktop with circuit conductors rated at least 50 amps with the blank cover identified as "240V ready," and a reserved main electrical service panel space to allow for the installation of a double pole circuit breaker permanently marked as "For Future 240V use."
§ 150.0(v)	**Electric Clothes Dryer Ready.** Clothes dryer locations with gas or propane plumbing to serve individual dwelling units must include: A dedicated unobstructed 240V branch circuit wiring installed within 3' of the dryer location with circuit conductors rated at least 30 amps with the blank cover identified as "240V ready," and a reserved main electrical service panel space to allow for the installation of a double pole circuit breaker permanently marked as "For Future 240V use."

*Exceptions may apply.

CERTIFICATE OF COMPLIANCE - RESIDENTIAL PERFORMANCE COMPLIANCE METHOD — **CF1R-PRF-01-E**

Project Name: Idlewild Unit 1 — **Calculation Date/Time:** 2026-02-26T11:57:02-08:00 — **(Page 1 of 8)**

Calculation Description: Title 24 Analysis — **Input File Name:** 3153 Idlewild Way UNIT 1.ribd25x

GENERAL INFORMATION

01	Project Name	Idlewild Unit 1			
02	Run Title	Title 24 Analysis			
03	Project Location	3153 Idlewild Way Unit 1			
04	City	San Diego	05	Standards Version	2025
06	Zip code	92117	07	Software Version	EnergyPro 10.0
08	Climate Zone	7	09	Front Orientation (deg/ Cardinal)	45
10	Building Type	Single family	11	Number of Dwelling Units	1
12	Project Scope	Newly Constructed	13	Number of Bedrooms	1
14	Addition Cond. Floor Area (ft²)	0	15	Number of Stories	1
16	Existing Cond. Floor Area (ft²)	n/a	17	Fenestration Average U-factor	0.3
18	Total Cond. Floor Area (ft²)	430	19	Glazing Percentage (%)	21.40%
20	ADU Bedroom Count	n/a	21	ADU Conditioned Floor Area	n/a
22	Fuel Type	All electric	23	No Dwelling Unit:	No

COMPLIANCE RESULTS

Building Complies with Computer Performance

This building incorporates features that require field testing and/or verification by a certified ECC rater under the supervision of a CEC-approved ECC provider.

This building incorporates one or more Special Features shown below

REQUIRED SPECIAL FEATURES

The following are features that must be installed as condition for meeting the modeled energy performance for this computer analysis.

- PV exception 1: No PV required if the SARA < 80 ft2 (0 kW)
- Northwest Energy Efficiency Alliance (NEEA) rated heat pump water heater; specific brand/model, or equivalent, must be installed

ECC FEATURE SUMMARY

The following is a summary of the features that must be field-verified by a certified ECC Rater as a condition for meeting the modeled energy performance for this computer analysis. Additional detail is provided in the building tables below. Registered CF2Rs and CF3Rs are required to be completed in the ECC Registry

- Indoor air quality ventilation
- Kitchen range hood
- Verified heat pump rated heating capacity

CERTIFICATE OF COMPLIANCE - RESIDENTIAL PERFORMANCE COMPLIANCE METHOD — **CF1R-PRF-01-E**

Project Name: Idlewild Unit 1 — **Calculation Date/Time:** 2026-02-26T11:57:02-08:00 — **(Page 2 of 8)**

Calculation Description: Title 24 Analysis — **Input File Name:** 3153 Idlewild Way UNIT 1.ribd25x

Compliance Summary

	Long Term System Cost (LSC)[1]		Source Energy Use	Peak Cooling**
	Efficiency[2] ($/ft²-yr)	Total[3] ($/ft²-yr)	Total[3] (kBtu/ft²-yr)	Electricity (kWh)
Standard Design	15.12	64.83	29.43	71.4195
Proposed Design	11.14	60.37	15	15.8434
Compliance Margins	3.98	4.46	14.43	0
	Pass	Pass	Pass	n/a

RESULT*: Complies

[1]Long-term System Cost (LSC) is a 30-year present value cost to California's energy system. LSC is not a predicted utility bill.
[2]Efficiency measures include energy efficient improvements such as better building envelope and more efficient mechanical equipment
[3]Total includes the sum of efficiency measures, solar photovoltaic (PV) measures and battery storage measures
* Building complies when Proposed Design is equal to or less than Standard Design in all applicable compliance categories
** Peak cooling target represents 120% of the standard design building peak cooling energy use.

Standard Design PV Capacity: 0.00 kWdc

CERTIFICATE OF COMPLIANCE - RESIDENTIAL PERFORMANCE COMPLIANCE METHOD — **CF1R-PRF-01-E**

Project Name: Idlewild Unit 1 — **Calculation Date/Time:** 2026-02-26T11:57:02-08:00 — **(Page 3 of 8)**

Calculation Description: Title 24 Analysis — **Input File Name:** 3153 Idlewild Way UNIT 1.ribd25x

LSC AND SOURCE ENERGY COMPLIANCE RESULTS FOR PERFORMANCE COMPONENTS

Energy Use	Standard Design Source Energy (kBtu/ft² -yr)	Standard Design LSC[1] ($/ft² -yr)	Proposed Design Source Energy (kBtu/ft² -yr)	Proposed Design LSC[1] ($/ft² -yr)	Compliance Margin Source (kBtu/ft² -yr)	Compliance Margin LSC[1] ($/ft² -yr)
Space Heating	0.05	0.1	0.66	1.49	-0.61	-1.39
Space Cooling	0.37	3.37	0.11	0.95	0.26	2.42
IAQ Ventilation	0.34	1.32	0.34	1.32	0	0
Water Heating	16.49	10.33	1.81	7.38	14.68	2.95
Self Utilization/Flexibility Credit	n/a	n/a	0	0	0	0
Efficiency Compliance Total	17.25	15.12	2.92	11.14	14.33	3.98
Photovoltaics And Battery	n/a	n/a	0	0	0	0
Flexibility	n/a	n/a	0	n/a	0	n/a
Indoor Lighting	0.85	3.07	0.85	3.07	0	0
Appl. & Cooking	5.5	24.49	5.4	24.01	0.1	0.48
Plug Loads	5.67	21.63	5.67	21.63	0	0
Outdoor Lighting	0.16	0.52	0.16	0.52	0	0
TOTAL COMPLIANCE	29.43	64.83	15	60.37	14.43	4.46

CERTIFICATE OF COMPLIANCE - RESIDENTIAL PERFORMANCE COMPLIANCE METHOD — **CF1R-PRF-01-E**

Project Name: Idlewild Unit 1 — **Calculation Date/Time:** 2026-02-26T11:57:02-08:00 — **(Page 4 of 8)**

Calculation Description: Title 24 Analysis — **Input File Name:** 3153 Idlewild Way UNIT 1.ribd25x

ENERGY USE INTENSITY

	Standard Design (kBtu/ft² - yr)	Proposed Design (kBtu/ft² - yr)	Margin (kBtu/ft² - yr)	Margin Percentage
Gross EUI[1]	32.43	30.12	2.31	7.12
Net EUI[2]	32.43	30.12	2.31	7.12

Notes
1. Gross EUI is Energy Use Total (not including PV) / Total Building Area.
2. Net EUI is Energy Use Total (including PV) / Total Building Area.

REQUIRED PV SYSTEMS

01	02	03	04	05	06	07	08	09	10	11	12
DC System Size (kWdc)	Exception	Module Type	Array Type	Power Electronics	CFI	Azimuth (deg)	Tilt Input	Array Angle (deg)	Tilt: (x in 12)	Inverter Eff. (%)	Annual Solar Access (%)
0	No PV - SARA less than 80 contiguous sq ft (Trigger CF2R-SRA-01)	Standard (14-17%)	Fixed	none	true	n/a	n/a	n/a	n/a	n/a	

BUILDING - FEATURES INFORMATION

01	02	03	04	05	06	07
Project Name	Conditioned Floor Area (ft²)	Number of Dwelling Units	Number of Bedrooms	Number of Zones	Number of Ventilation Cooling Systems	Number of Water Heating Systems
Idlewild Unit 1	430	1	1	1	0	1

ZONE INFORMATION

01	02	03	04	05	06	07
Zone Name	Zone Type	HVAC System Name	Zone Floor Area (ft²)	Avg. Ceiling Height	Water Heating System 1	Status
Unit 1 Zone	Conditioned	Ductless Mini Split1	430	8	DHW Sys 1	New

LICENSED ARCHITECT
CHRISTOPHER SAWAYA
C35363
REN: 06-30-27
STATE OF CALIFORNIA

SAWAYA ARCHITECTURE

3565 7TH AVENUE
SAN DIEGO, CA 92103
SAWAYAARCHITECTURE.COM
(619) 916 - 8145

IDLEWILD ADUS

3153 IDLEWILD WAY

3153 IDLEWILD WY UNIT 1
3153 IDLEWILD WY UNIT 2
3153 IDLEWILD WY UNIT 3
3153 IDLEWILD WY UNIT 4

SAN DIEGO, CA 92117

DATE	BY	ISSUE DESCRIPTION
03-10-26	CC	SUBMITTAL

SAWAYA ARCHITECTURE

T24.1

TITLE 24

2603
PRINT TO SCALE : 24" X 36"

OPAQUE SURFACES SUMMARY

01	02	03	04	05	06	07	08
Name	Zone	Construction	Azimuth	Orientation	Gross Area (ft^2)	Window and Door Area (ft2)	Tilt (deg)
NE Exterior Wall	Unit 1 Zone	R-15 Wall	45	Front	137	46	90
NW Exterior Wall	Unit 1 Zone	R-15 Wall	315	Right	200	0	90
SW Exterior Wall	Unit 1 Zone	R-15 Wall	225	Back	137	26	90
SE Exterior Wall	Unit 1 Zone	R-15 Wall	135	Left	200	40	90
Interior Surface	Unit 1 Zone	R-19 Roof No Attic	n/a	n/a	430	n/a	n/a

FENESTRATION / GLAZING

01	02	03	04	05	06	07	08	09	10
Name	Type	Surface	Orientation	Azimuth	Mult.	Area (ft^2)	U-factor	SHGC	Rating Source
Window A	Window	NE Exterior Wall	Front	45	1	20	0.3	0.23	NFRC
Window D	Window	NE Exterior Wall	Front	45	1	6	0.3	0.23	NFRC
Window A 2	Window	SW Exterior Wall	Back	225	1	20	0.3	0.23	NFRC
Window B	Window	SW Exterior Wall	Back	225	1	6	0.3	0.23	NFRC
Window A 3	Window	SE Exterior Wall	Left	135	1	20	0.3	0.23	NFRC
Window A 4	Window	SE Exterior Wall	Left	135	1	20	0.3	0.23	NFRC
Total North Facing Fenestration						26			
Total East Facing Fenestration						0			
Total South Facing Fenestration						26			
Total West Facing Fenestration						40			

OPAQUE DOORS

01	02	03	04	05
Name	Side of Building	Area (ft^2)	U-factor	NFRC Rating Req.
Door 101	NE Exterior Wall	20	0.2	Yes

SLAB FLOORS

01	02	03	04	05	06	07
Name	Zone	Area (ft^2)	Perimeter (ft)	Edge Insul. R-value	Edge Insul. Depth	Heated
Slab-on-Grade	Unit 1 Zone	430	0.1	none	0	No

OPAQUE SURFACE CONSTRUCTIONS

01	02	03	04	05	06	07	08	09
Construction Name	Surface Type	Construction Type	Framing	Total Cavity R-value	Interior / Exterior Continuous R-value	U-factor	Assembly Layers	Non-Std Spray Foam
R-15 Wall	Exterior Walls	Wood Framed Wall	2x4 @ 16 in. O. C.	R-15	None / None	0.095	Inside Finish: Gypsum Board Cavity / Frame: R-15 / 2x4 Exterior Finish: 3 Coat Stucco	☐
R-19 Roof No Attic	Interior Ceiling	Wood Framed Ceiling	2x8 @ 16 in. O. C.	R-19	None / None	0.046	Floor Surface: Carpeted Floor Deck: Wood Siding/sheathing/decking Cavity / Frame: R-19 / 2x8 Ceiling Below Finish: Gypsum Board	☐

WATER HEATING SYSTEMS

01	02	03	04	05	06	07	08	09
Name	System Type	Distribution Type	Water Heater Name	Number of Units	Solar Heating System	Compact Distribution	ECC Verification	Water Heater Name (#)
DHW Sys 1	Domestic Hot Water (DHW)	Standard	DHW Heater 1	1	n/a	None	n/a	DHW Heater 1 (1)

WATER HEATERS - HEAT PUMP

01	02	03	04	05	06	07	08	09	10
Name	# of Units	Tank Vol. (gal)	NEEA Heat Pump Brand	NEEA Heat Pump Model	Tank Location	Duct Inlet Air Source	Duct Outlet Air Source	UEF	JA13 Compliant
DHW Heater 1	1	40	A. O. Smith	AOSmith HPTA40 2xx	Outside	Unit 1 Zone	Unit 1 Zone	n/a	☐

HVAC - HEAT PUMPS

01	02	03	04	05	06	06b	07	08	09	10	11	12	13
			Heating					Cooling					
Name	System Type	Number of Units	Heating Efficiency Type	HSPF/HSPF2/COP	Cap 47	Cap 17	Backup	Cooling Efficiency Type	SEER/SEER2	EER/EER2/CEER	Airflow Target	Fan Power (Watts/CFM)	Variable Speed
Heat Pump System 1	Ductless MiniSplit HP	1	HSPF2	7.5	9000	4900	Electric	EER2/SEER2	24.3	11.7	0	0	☐

INDOOR AIR QUALITY (IAQ) FANS

01	02	03	04	05	06	07	08
Dwelling Unit	Airflow (CFM)	Fan Efficacy (W/CFM)	IAQ Fan Type	Includes Heat/Energy Recovery?	IAQ Recovery Effectiveness - ASRE	Includes Fault Indicator Display?	Status
SFam IAQVentRpt	28	0.35	Exhaust	No	n/a / n/a	No	

DOCUMENTATION AUTHOR'S DECLARATION STATEMENT

1. I certify that this Certificate of Compliance documentation is accurate and complete.

Documentation Author Name: Jeremy Senkevech	Documentation Author Signature: *Jeremy Senkevech*
Company: Grizzly HERS Testing, Inc.	Signature Date: 02/26/2026
Address: 772 Jamacha Rd #165	CEA/HERS/ECC Certification Identification (if applicable): RCN13100
City/State/Zip: El Cajon, CA 92019	Phone: (619) 905-0872

RESPONSIBLE PERSON'S DECLARATION STATEMENT

I certify the following under penalty of perjury, under the laws of the State of California:

1. The information provided on this Certificate of Compliance is true and correct.
2. I am eligible under Division 3 of the Business and Professions Code to accept responsibility for the building design or system design identified on this Certificate of Compliance (responsible designer).
3. The energy features and performance specifications, materials, components, and manufactured devices for the building design or system design identified on this Certificate of Compliance conform to the requirements of Title 24, Part 1 and Part 6 of the California Code of Regulations.
4. The building design features or system design features identified on this Certificate of Compliance are consistent with the information provided on other applicable compliance documents, worksheets, calculations, plans and specifications submitted to the enforcement agency for approval with this building permit application.
5. I understand that a registered copy of this Certificate of Compliance shall be made available with the building permit(s) issued for the building and shall be made available to the enforcement agency for all applicable inspections. I will take the necessary steps to fulfill this requirement.
6. I understand that a registered copy of this Certificate of Compliance is required to be included with the documentation the builder provides to the building owner at occupancy. I will take the necessary steps to fulfill this requirement.

Responsible Designer Name: Christopher Sawaya	Responsible Designer Signature: *Christopher Sawaya*
Company: Sawaya Architecture	Date Signed: 02/26/2026
Address: 3636 5th Avenue, Suite 106	License:
City/State/Zip: San Diego, CA 92103	Phone: (619) 916-8145

Digitally signed by California Home Energy Efficiency Rating Services (CHEERS). This digital signature is provided in order to secure the content of this registered document, and in no way implies Registration Provider responsibility for the accuracy of the information.

GENERAL INFORMATION

01	Project Name	Idlewild Unit 2			
02	Run Title	Title 24 Analysis			
03	Project Location	3153 Idlewild Way Unit 2			
04	City	San Diego	05	Standards Version	2025
06	Zip code	92117	07	Software Version	EnergyPro 10.0
08	Climate Zone	7	09	Front Orientation (deg/ Cardinal)	45
10	Building Type	Single family	11	Number of Dwelling Units	1
12	Project Scope	Newly Constructed	13	Number of Bedrooms	1
14	Addition Cond. Floor Area (ft^2)	0	15	Number of Stories	1
16	Existing Cond. Floor Area (ft^2)	n/a	17	Fenestration Average U-factor	0.3
18	Total Cond. Floor Area (ft^2)	430	19	Glazing Percentage (%)	20.00%
20	ADU Bedroom Count	n/a	21	ADU Conditioned Floor Area	n/a
22	Fuel Type	All electric	23	No Dwelling Unit:	No

COMPLIANCE RESULTS

Building Complies with Computer Performance

This building incorporates features that require field testing and/or verification by a certified ECC rater under the supervision of a CEC-approved ECC provider.

This building incorporates one or more Special Features shown below

REQUIRED SPECIAL FEATURES

The following are features that must be installed as condition for meeting the modeled energy performance for this computer analysis.

- PV exception 2: No PV required when minimum PV size (Section 150.1(c)14) < 1.8 kWdc (0 kW)
- Northwest Energy Efficiency Alliance (NEEA) rated heat pump water heater; specific brand/model, or equivalent, must be installed

ECC FEATURE SUMMARY

The following is a summary of the features that must be field-verified by a certified ECC Rater as a condition for meeting the modeled energy performance for this computer analysis. Additional detail is provided in the building tables below. Registered CF2Rs and CF3Rs are required to be completed in the ECC Registry

- Indoor air quality ventilation
- Kitchen range hood
- Verified heat pump rated heating capacity

Compliance Summary

	Long Term System Cost (LSC)[1]		Source Energy Use	Peak Cooling**
	Efficiency[2] ($/$ft^2$-yr)	Total[3] ($/$ft^2$-yr)	Total[3] (kBtu/ft^2-yr)	Electricity (kWh)
Standard Design	16.13	65.79	29.55	95.188
Proposed Design	11.92	61.18	15.22	27.5246
Compliance Margins	4.21	4.61	14.33	0
	Pass	Pass	Pass	n/a
RESULT*: Complies				

[1]Long-term System Cost (LSC) is a 30-year present value cost to California's energy system. LSC is not a predicted utility bill.
[2]Efficiency measures include energy efficient improvements such as better building envelope and more efficient mechanical equipment
[3]Total includes the sum of efficiency measures, solar photovoltaic (PV) measures and battery storage measures
* Building complies when Proposed Design is equal to or less than Standard Design in all applicable compliance categories
** Peak cooling target represents 120% of the standard design building peak cooling energy use.

Standard Design PV Capacity: 0.00 kWdc

LSC AND SOURCE ENERGY COMPLIANCE RESULTS FOR PERFORMANCE COMPONENTS

Energy Use	Standard Design Source Energy (kBtu/ft^2 -yr)	Standard Design LSC[1] ($/$ft^2$ -yr)	Proposed Design Source Energy (kBtu/ft^2 -yr)	Proposed Design LSC[1] ($/$ft^2$ -yr)	Compliance Margin Source (kBtu/ft^2 -yr)	Compliance Margin LSC[1] ($/$ft^2$ -yr)
Space Heating	0.06	0.1	0.83	1.87	-0.77	-1.77
Space Cooling	0.49	4.36	0.16	1.38	0.33	2.98
IAQ Ventilation	0.34	1.32	0.34	1.32	0	0
Water Heating	16.49	10.35	1.81	7.35	14.68	3
Self Utilization/Flexibility Credit	n/a	n/a	0	0	0	0
Efficiency Compliance Total	**17.38**	**16.13**	**3.14**	**11.92**	**14.24**	**4.21**
Photovoltaics And Battery	n/a	n/a	0	0	0	0
Flexibility	n/a	n/a	0	n/a	0	n/a
Indoor Lighting	0.85	3.07	0.85	3.07	0	0
Appl. & Cooking	5.49	24.44	5.4	24.04	0.09	0.4
Plug Loads	5.67	21.63	5.67	21.63	0	0
Outdoor Lighting	0.16	0.52	0.16	0.52	0	0
TOTAL COMPLIANCE	**29.55**	**65.79**	**15.22**	**61.18**	**14.33**	**4.61**

ENERGY USE INTENSITY

	Standard Design (kBtu/ft^2 - yr)	Proposed Design (kBtu/ft^2 - yr)	Margin (kBtu/ft^2 - yr)	Margin Percentage
Gross EUI[1]	32.83	30.49	2.34	7.13
Net EUI[2]	32.83	30.49	2.34	7.13

Notes
1. Gross EUI is Energy Use Total (not including PV) / Total Building Area.
2. Net EUI is Energy Use Total (including PV) / Total Building Area.

REQUIRED PV SYSTEMS

01	02	03	04	05	06	07	08	09	10	11	12
DC System Size (kWdc)	Exception	Module Type	Array Type	Power Electronics	CFI	Azimuth (deg)	Tilt Input	Array Angle (deg)	Tilt: (x in 12)	Inverter Eff. (%)	Annual Solar Access (%)
0	No PV - required PV less than 1.8kWdc	Standard (14-17%)	Fixed	none	true	n/a	n/a	n/a	n/a	n/a	

BUILDING - FEATURES INFORMATION

01	02	03	04	05	06	07
Project Name	Conditioned Floor Area (ft^2)	Number of Dwelling Units	Number of Bedrooms	Number of Zones	Number of Ventilation Cooling Systems	Number of Water Heating Systems
Idlewild Unit 2	430	1	1	1	0	1

ZONE INFORMATION

01	02	03	04	05	06	07
Zone Name	Zone Type	HVAC System Name	Zone Floor Area (ft^2)	Avg. Ceiling Height	Water Heating System 1	Status
Unit 2 Zone	Conditioned	Ductless Mini Split1	430	8	DHW Sys 1	New

OPAQUE SURFACES SUMMARY

01	02	03	04	05	06	07	08
Name	Zone	Construction	Azimuth	Orientation	Gross Area (ft^2)	Window and Door Area (ft2)	Tilt (deg)
NE Exterior Wall	Unit 2 Zone	R-15 Wall	45	Front	137	40	90
NW Exterior Wall	Unit 2 Zone	R-15 Wall	315	Right	200	0	90
SW Exterior Wall	Unit 2 Zone	R-15 Wall	225	Back	137	26	90
SE Exterior Wall	Unit 2 Zone	R-15 Wall	135	Left	200	40	90

OPAQUE SURFACES - CATHEDRAL CEILINGS

01	02	03	04	05	06	07	08	09	10
Name	Zone	Construction	Azimuth	Orientation	Area (ft^2)	Skylight Area (ft^2)	Roof Rise (x in 12)	CRRC Rated Roof Reflectance	CRRC Rated Roof Emittance
Roof	Unit 2 Zone	R-30 Roof No Attic	0		430	0	0	0.1	0.85

FENESTRATION / GLAZING

01	02	03	04	05	06	07	08	09	10
Name	Type	Surface	Orientation	Azimuth	Mult.	Area (ft^2)	U-factor	SHGC	Rating Source
Window A	Window	NE Exterior Wall	Front	45	1	20	0.3	0.23	NFRC
Window A 2	Window	SW Exterior Wall	Back	225	1	20	0.3	0.23	NFRC
Window B	Window	SW Exterior Wall	Back	225	1	6	0.3	0.23	NFRC
Window A 3	Window	SE Exterior Wall	Left	135	1	20	0.3	0.23	NFRC
Window A 4	Window	SE Exterior Wall	Left	135	1	20	0.3	0.23	NFRC
Total North Facing Fenestration						20			

LICENSED ARCHITECT
CHRISTOPHER SAWAYA
C35363
REN: 06-30-27
STATE OF CALIFORNIA

SAWAYA ARCHITECTURE

3565 7TH AVENUE
SAN DIEGO, CA 92103
SAWAYAARCHITECTURE.COM
(619) 916 - 8145

IDLEWILD ADUS

3153 IDLEWILD WAY

3153 IDLEWILD WY UNIT 1
3153 IDLEWILD WY UNIT 2
3153 IDLEWILD WY UNIT 3
3153 IDLEWILD WY UNIT 4

SAN DIEGO, CA 92117

DATE	BY	ISSUE DESCRIPTION
03-10-26	CC	SUBMITTAL

SAWAYA ARCHITECTURE

T24.2

TITLE 24

2603
PRINT TO SCALE : 24" X 36"

CERTIFICATE OF COMPLIANCE - RESIDENTIAL PERFORMANCE COMPLIANCE METHOD **CF1R-PRF-01-E**

Project Name: Idlewild Unit 2 **Calculation Date/Time:** 2026-02-26T11:29:56-08:00 **(Page 6 of 9)**

Calculation Description: Title 24 Analysis **Input File Name:** 3153 Idlewild Way UNIT 2.ribd25x

FENESTRATION / GLAZING

01	02	03	04	05	06	07	08	09	10
Name	Type	Surface	Orientation	Azimuth	Mult.	Area (ft²)	U-factor	SHGC	Rating Source
Total East Facing Fenestration						8			
Total South Facing Fenestration						36			
Total West Facing Fenestration						40			

OPAQUE DOORS

01	02	03	04	05
Name	Side of Building	Area (ft²)	U-factor	NFRC Rating Req.
Door 101	NE Exterior Wall	20	0.2	Yes

SLAB FLOORS

01	02	03	04	05	06	07
Name	Zone	Area (ft²)	Perimeter (ft)	Edge Insul. R-value	Edge Insul. Depth	Heated
Slab-on-Grade	Unit 2 Zone	630	0.1	none	0	No

OPAQUE SURFACE CONSTRUCTIONS

01	02	03	04	05	06	07	08	09
Construction Name	Surface Type	Construction Type	Framing	Total Cavity R-value	Interior / Exterior Continuous R-value	U-factor	Assembly Layers	Non-Std Spray Foam
R-15 Wall	Exterior Walls	Wood Framed Wall	2x4 @ 16 in. O. C.	R-15	None / None	0.095	Inside Finish: Gypsum Board Cavity / Frame: R-15 / 2x4 Exterior Finish: 3 Coat Stucco	☐

CERTIFICATE OF COMPLIANCE - RESIDENTIAL PERFORMANCE COMPLIANCE METHOD **CF1R-PRF-01-E**

Project Name: Idlewild Unit 2 **Calculation Date/Time:** 2026-02-26T11:29:56-08:00 **(Page 7 of 9)**

Calculation Description: Title 24 Analysis **Input File Name:** 3153 Idlewild Way UNIT 2.ribd25x

OPAQUE SURFACE CONSTRUCTIONS

01	02	03	04	05	06	07	08	09
Construction Name	Surface Type	Construction Type	Framing	Total Cavity R-value	Interior / Exterior Continuous R-value	U-factor	Assembly Layers	Non-Std Spray Foam
R-30 Roof No Attic	Cathedral Ceilings	Wood Framed Ceiling	2x12 @ 16 in. O. C.	R-30	None / None	0.036	Roofing: Light Roof (Asphalt Shingle) Roof Deck: Wood Siding/sheathing/decking Cavity / Frame: R-30 / 2x12 Inside Finish: Gypsum Board	☐

WATER HEATING SYSTEMS

01	02	03	04	05	06	07	08	09
Name	System Type	Distribution Type	Water Heater Name	Number of Units	Solar Heating System	Compact Distribution	ECC Verification	Water Heater Name (#)
DHW Sys 1	Domestic Hot Water (DHW)	Standard	DHW Heater 1	1	n/a	None	n/a	DHW Heater 1 (1)

WATER HEATERS - HEAT PUMP

01	02	03	04	05	06	07	08	09	10
Name	# of Units	Tank Vol. (gal)	NEEA Heat Pump Brand	NEEA Heat Pump Model	Tank Location	Duct Inlet Air Source	Duct Outlet Air Source	UEF	IA13 Compliant
DHW Heater 1	1	40	A. O. Smith	AOSmithHPTA40 2ex	Outside	Unit 2 Zone	Unit 2 Zone	n/a	☐

CERTIFICATE OF COMPLIANCE - RESIDENTIAL PERFORMANCE COMPLIANCE METHOD **CF1R-PRF-01-E**

Project Name: Idlewild Unit 2 **Calculation Date/Time:** 2026-02-26T11:29:56-08:00 **(Page 8 of 9)**

Calculation Description: Title 24 Analysis **Input File Name:** 3153 Idlewild Way UNIT 2.ribd25x

HVAC - HEAT PUMPS

01	02	03	04	05	06	07	08	09	10	11	12	13
					Heating			Cooling				
Name	System Type	Number of Units	Heating Efficiency Type	HSPF/HSPF2 /COP	Cap 47	Cap 17	Backup	Cooling Efficiency Type	SEER/SEER2	EER/EER2/CEE EER	Airflow Target	Fan Power (Watts/CFM)	Variable Speed
Heat Pump System 1	Ductless MiniSplit HP	1	HSPF2	7.7	9000	6600	Electric	SEER2/EER2	14.3	11.7	0	0	☐

INDOOR AIR QUALITY (IAQ) FANS

01	02	03	04	05	06	07	08
Dwelling Unit	Airflow (CFM)	Fan Efficacy (W/CFM)	IAQ Fan Type	Includes Heat/Energy Recovery?	IAQ Recovery Effectiveness - ASRE	Includes Fault Indicator Display?	Status
SFam IAQVentFlpt	28	0.35	Exhaust	No	n/a / n/a	No	

CERTIFICATE OF COMPLIANCE - RESIDENTIAL PERFORMANCE COMPLIANCE METHOD **CF1R-PRF-01-E**

Project Name: Idlewild Unit 2 **Calculation Date/Time:** 2026-02-26T11:29:56-08:00 **(Page 9 of 9)**

Calculation Description: Title 24 Analysis **Input File Name:** 3153 Idlewild Way UNIT 2.ribd25x

DOCUMENTATION AUTHOR'S DECLARATION STATEMENT

I, I certify that this Certificate of Compliance documentation is accurate and complete.

Documentation Author Name: Jeremy Senkevych	Documentation Author Signature: Jeremy Senkevych
Company: Grizzly HERS Testing, Inc.	Signature Date: 02-26-2026
Address: 772 Jamacha Rd #165	CEA/HEA/ROC Certification Identification (if applicable): HCM13100
City/State/Zip: El Cajon, CA 92019	Phone: (619) 905-6872

RESPONSIBLE PERSON'S DECLARATION STATEMENT

I certify the following under penalty of perjury, under the laws of the State of California:

1. The information provided on this Certificate of Compliance is true and correct.
2. I am eligible under Division 3 of the Business and Professions Code to accept responsibility for the building design or system design identified on this Certificate of Compliance (responsible designer).
3. The energy features and performance specifications, materials, components, and manufactured devices for the building design or system design identified on this Certificate of Compliance conform to the requirements of Title 24, Part 1 and Part 6 of the California Code of Regulations.
4. The building design features or system design features identified on this Certificate of Compliance are consistent with the information provided on other applicable compliance documents, worksheets, calculations, plans and specifications submitted to the enforcement agency for approval with this building permit application.
5. I understand that a registered copy of this Certificate of Compliance shall be made available with the building permit(s) issued for the building and shall be made available to the enforcement agency for all applicable inspections. I will take the necessary steps to fulfill this requirement.
6. I understand that a registered copy of this Certificate of Compliance is required to be included with the documentation the builder provides to the building owner at occupancy. I will take the necessary steps to fulfill this requirement.

Responsible Designer Name: Christopher Sawaya	Responsible Designer Signature: Christopher Sawaya
Company: Sawaya Architecture	Date Signed: 02-26-2026
Address: 3636 5th Avenue, Suite 106	License:
City/State/Zip: San Diego, CA 92103	Phone: (619) 916-8145

Digitally signed by California Home Energy Efficiency Rating Services (CHEERS). This digital signature is provided in order to secure the content of this registered document, and in no way implies Registration Provider responsibility for the accuracy of the information.

CERTIFICATE OF COMPLIANCE - RESIDENTIAL PERFORMANCE COMPLIANCE METHOD **CF1R-PRF-01-E**

Project Name: Idlewild Unit 3 **Calculation Date/Time:** 2026-02-26T11:58:34-08:00 **(Page 1 of 9)**

Calculation Description: Title 24 Analysis **Input File Name:** 3153 Idlewild Way Unit 3.ribd25x

GENERAL INFORMATION

01	Project Name	Idlewild Unit 3			
02	Run Title	Title 24 Analysis			
03	Project Location	3153 Idlewild Way Unit 3			
04	City	San Diego	05	Standards Version	2025
06	Zip code	92117	07	Software Version	EnergyPro 10.0
08	Climate Zone	7	09	Front Orientation (deg/ Cardinal)	45
10	Building Type	Single family	11	Number of Dwelling Units	1
12	Project Scope	Newly Constructed	13	Number of Bedrooms	2
14	Addition Cond. Floor Area (ft²)	0	15	Number of Stories	1
16	Existing Cond. Floor Area (ft²)	n/a	17	Penetration Average U-factor	0.3
18	Total Cond. Floor Area (ft²)	650	19	Glazing Percentage (%)	17.85%
20	ADU Bedroom Count	n/a	21	ADU Conditioned Floor Area	n/a
22	Fuel Type	All electric	23	No Dwelling Units	No

COMPLIANCE RESULTS

Building Complies with Computer Performance

This building incorporates features that require field testing and/or verification by a certified ECC rater under the supervision of a CEC-approved ECC provider.

This building incorporates one or more Special Features shown below

REQUIRED SPECIAL FEATURES

The following are features that must be installed as conditions for meeting the modeled energy performance for this computer analysis.

- PV exception 1: No PV required if the SARA < 80 ft2 (0 kW)
- Northwest Energy Efficiency Alliance (NEEA) rated heat pump water heater; specific brand/model, or equivalent, must be installed

ECC FEATURE SUMMARY

The following is a summary of the features that must be field-verified by a certified ECC Rater as a condition for meeting the modeled energy performance for this computer analysis. Additional detail is provided in the building tables below. Registered CF2ds and CF3ds are required to be completed in the ECC Registry

- Indoor air quality ventilation
- Kitchen range hood
- Verified heat pump rated heating capacity

CERTIFICATE OF COMPLIANCE - RESIDENTIAL PERFORMANCE COMPLIANCE METHOD **CF1R-PRF-01-E**

Project Name: Idlewild Unit 3 **Calculation Date/Time:** 2026-02-26T11:58:34-08:00 **(Page 2 of 9)**

Calculation Description: Title 24 Analysis **Input File Name:** 3153 Idlewild Way Unit 3.ribd25x

Compliance Summary

	Long Term System Cost (LSC)[1]		Source Energy Use	Peak Cooling**
	Efficiency[2] ($/ft²-yr)	Total[3] ($/ft²-yr)	Total[3] (kBtu/ft²-yr)	Electricity (kWh)
Standard Design	11.5	59.73	22.47	65.3526
Proposed Design	8.95	47.86	11.85	15.5569
Compliance Margins	2.55	1.87	10.62	0
	Pass	Pass	Pass	n/a
RESULT*: Complies				

[1]Long-term System Cost (LSC) is a 30-year present value cost to California's energy future. LSC is not a prediction of utility bills

[2]Efficiency measures include energy efficient improvements such as better building envelope and more efficient mechanical equipment

[3]Total includes the sum of efficiency measures, solar photovoltaic (PV) measures and battery storage measures

* Building complies when Proposed Design is equal to or less than Standard Design in all applicable compliance categories

** Peak cooling target represents 120% of the standard design building peak cooling energy use

Standard Design PV Capacity: 0.00 kWdc

CERTIFICATE OF COMPLIANCE - RESIDENTIAL PERFORMANCE COMPLIANCE METHOD **CF1R-PRF-01-E**

Project Name: Idlewild Unit 3 **Calculation Date/Time:** 2026-02-26T11:58:34-08:00 **(Page 3 of 9)**

Calculation Description: Title 24 Analysis **Input File Name:** 3153 Idlewild Way Unit 3.ribd25x

LSC AND SOURCE ENERGY COMPLIANCE RESULTS FOR PERFORMANCE COMPONENTS

Energy Use	Standard Design Source Energy (kBtu/ft²-yr)	Standard Design LSC[1] ($/ft²-yr)	Proposed Design Source Energy (kBtu/ft²-yr)	Proposed Design LSC[1] ($/ft²-yr)	Compliance Margin Source (kBtu/ft²-yr)	Compliance Margin LSC[1] ($/ft²-yr)
Space Heating	0.03	0.07	0.62	1.48	-0.59	-1.41
Space Cooling	0.24	2.13	0.08	0.55	0.16	1.58
IAQ Ventilation	0.34	1.31	0.34	1.31	0	0
Water Heating	12.34	7.09	1.96	5.61	10.98	2.38
Self Utilization/Flexibility Credit	n/a	n/a	0	0	0	0
Efficiency Compliance Total	12.95	12.3	4.4	8.95	10.55	2.55
Photovoltaics And Battery	n/a	n/a	0	0	0	0
Flexibility	n/a	n/a	0	n/a	0	n/a
Indoor Lighting	0.68	2.48	0.68	2.48	0	0
Appl. & Cooking	3.98	18.27	3.91	17.95	0.07	0.32
Plug Loads	4.72	18	4.72	18	0	0
Outdoor Lighting	0.14	0.48	0.14	0.48	0	0
TOTAL COMPLIANCE	22.47	50.73	11.85	47.86	10.62	2.87

CERTIFICATE OF COMPLIANCE - RESIDENTIAL PERFORMANCE COMPLIANCE METHOD **CF1R-PRF-01-E**

Project Name: Idlewild Unit 3 **Calculation Date/Time:** 2026-02-26T11:58:34-08:00 **(Page 4 of 9)**

Calculation Description: Title 24 Analysis **Input File Name:** 3153 Idlewild Way Unit 3.ribd25x

ENERGY USE INTENSITY

	Standard Design (kBtu/ft² - yr)	Proposed Design (kBtu/ft² - yr)	Margin (kBtu/ft² - yr)	Margin Percentage
Gross EUI[1]	24.92	23.54	1.38	5.54
Net EUI[2]	24.92	23.54	1.38	5.54

Notes

1. Gross EUI is Energy Use Total (not including PV) / Total Building Area.
2. Net EUI is Energy Use Total (including PV) / Total Building Area.

REQUIRED PV SYSTEMS

01	02	03	04	05	06	07	08	09	10	11	12
DC System Size (kWdc)	Exception	Module Type	Array Type	Power Electronics	OR	Azimuth (deg)	Tilt Input	Array Angle (deg)	Tilt: (x in 12)	Inverter Eff. (%)	Annual Solar Access (%)
0	No PV - SARA less than 80 contiguous sq ft (Trigger CF2R-SRA-01)	Standard (14-17%)	Fixed	None	True	n/a	n/a	n/a	n/a	n/a	

BUILDING - FEATURES INFORMATION

01	02	03	04	05	06	07
Project Name	Conditioned Floor Area (ft²)	Number of Dwelling Units	Number of Bedrooms	Number of Zones	Number of Ventilation Cooling Systems	Number of Water Heating Systems
Idlewild Unit 3	650	1	2	1	0	1

ZONE INFORMATION

01	02	03	04	05	06	07
Zone Name	Zone Type	HVAC System Name	Zone Floor Area (ft²)	Avg. Ceiling Height	Water Heating System 1	Status
Unit 3 Zone	Conditioned	Ductless Mini Split1	650	8	DHW Sys 1	New

CERTIFICATE OF COMPLIANCE - RESIDENTIAL PERFORMANCE COMPLIANCE METHOD **CF1R-PRF-01-E**

Project Name: Idlewild Unit 3 **Calculation Date/Time:** 2026-02-26T11:58:34-08:00 **(Page 5 of 9)**

Calculation Description: Title 24 Analysis **Input File Name:** 3153 Idlewild Way Unit 3.ribd25x

OPAQUE SURFACES SUMMARY

01	02	03	04	05	06	07	08
Name	Zone	Construction	Azimuth	Orientation	Gross Area (ft²)	Window and Door Area (ft2)	Tilt (deg)
NE Exterior Wall	Unit 3 Zone	R-15 Wall	45	Front	208	70	90
NW Exterior Wall	Unit 3 Zone	R-15 Wall	315	Right	200	40	90
SW Exterior Wall	Unit 3 Zone	R-15 Wall	225	Back	208	26	90
SE Exterior Wall	Unit 3 Zone	R-15 Wall	135	Left	200	0	90
Interior Surface	Unit 3 Zone	R-19 Roof No Attic	n/a	n/a	650	n/a	n/a

FENESTRATION / GLAZING

01	02	03	04	05	06	07	08	09	10
Name	Type	Surface	Orientation	Azimuth	Mult.	Area (ft²)	U-factor	SHGC	Rating Source
Window C	Window	NE Exterior Wall	Front	45	1	20	0.3	0.23	NFRC
Window A	Window	NE Exterior Wall	Front	45	1	20	0.3	0.23	NFRC
Window A 2	Window	NE Exterior Wall	Front	45	1	20	0.3	0.23	NFRC
Window A 3	Window	NW Exterior Wall	Right	315	1	20	0.3	0.23	NFRC
Window A 4	Window	NW Exterior Wall	Right	315	1	20	0.3	0.23	NFRC
Window A 5	Window	SW Exterior Wall	Back	225	1	20	0.3	0.23	NFRC
Window B	Window	SW Exterior Wall	Back	225	1	6	0.3	0.23	NFRC
Total North Facing Fenestration						50			
Total East Facing Fenestration						40			

LICENSED ARCHITECT
CHRISTOPHER SAWAYA
C36363
REN: 06-30-27
STATE OF CALIFORNIA

SAWAYA ARCHITECTURE

3565 7TH AVENUE
SAN DIEGO, CA 92103
SAWAYAARCHITECTURE.COM
(619) 916 - 8145

IDLEWILD ADUS

3153 IDLEWILD WAY

3153 IDLEWILD WY UNIT 1
3153 IDLEWILD WY UNIT 2
3153 IDLEWILD WY UNIT 3
3153 IDLEWILD WY UNIT 4

SAN DIEGO, CA 92117

DATE	BY	CC	ISSUE DESCRIPTION
03-10-26			SUBMITTAL

SAWAYA ARCHITECTURE

T24.3

TITLE 24

2603
PRINT TO SCALE : 24" X 36"

CERTIFICATE OF COMPLIANCE - RESIDENTIAL PERFORMANCE COMPLIANCE METHOD — CF1R-PRF-01-E

Project Name: Idlewild Unit 3 — **Calculation Date/Time:** 2026-02-26T11:58:34-08:00 — **(Page 6 of 9)**

Calculation Description: Title 24 Analysis — **Input File Name:** 3153 Idlewild Way Unit 3.ribd25x

FENESTRATION / GLAZING

01	02	03	04	05	06	07	08	09	10
Name	Type	Surface	Orientation	Azimuth	Mult.	Area (ft²)	U-factor	SHGC	Rating Source
Total South Facing Fenestration						20			
Total West Facing Fenestration						9			

OPAQUE DOORS

01	02	03	04	05
Name	Side of Building	Area (ft²)	U-factor	NFRC Rating Req.
Door 101	NE Exterior Wall	20	0.2	Yes

SLAB FLOORS

01	02	03	04	05	06	07
Name	Zone	Area (ft²)	Perimeter (ft)	Edge Insul. R-value	Edge Insul. Depth	Heated
Slab-on-Grade	Unit 3 Zone	650	91	none	0	No

OPAQUE SURFACE CONSTRUCTIONS

01	02	03	04	05	06	07	08	09
Construction Name	Surface Type	Construction Type	Framing	Total Cavity R-value	Interior / Exterior Continuous R-value	U-factor	Assembly Layers	Non-Std Spray Foam
R-15 Wall	Exterior Walls	Wood Framed Wall	2x4 @ 16 in. O. C.	R-15	None / None	0.095	Inside Finish: Gypsum Board Cavity / Frame: R-15 / 2x4 Exterior Finish: 3 Coat Stucco	☐

CERTIFICATE OF COMPLIANCE - RESIDENTIAL PERFORMANCE COMPLIANCE METHOD — CF1R-PRF-01-E

Project Name: Idlewild Unit 3 — **Calculation Date/Time:** 2026-02-26T11:58:34-08:00 — **(Page 7 of 9)**

Calculation Description: Title 24 Analysis — **Input File Name:** 3153 Idlewild Way Unit 3.ribd25x

OPAQUE SURFACE CONSTRUCTIONS

01	02	03	04	05	06	07	08	09
Construction Name	Surface Type	Construction Type	Framing	Total Cavity R-value	Interior / Exterior Continuous R-value	U-factor	Assembly Layers	Non-Std Spray Foam
R-19 Roof No Attic	Interior Ceiling	Wood Framed Ceiling	2x6 @ 16 in. O. C.	R-19	None / None	0.046	Floor Surface: Carpeted Floor Deck: Wood Siding/sheathing/decking Cavity / Frame: R-19 / 2x8 Ceiling Below Finish: Gypsum Board	☐

WATER HEATING SYSTEMS

01	02	03	04	05	06	07	08	09
Name	System Type	Distribution Type	Water Heater Name	Number of Units	Solar Heating System	Compact Distribution	ECC Verification	Water Heater Name (#)
DHW Sys 1	Domestic Hot Water (DHW)	Standard	DHW Heater 1	1	n/a	None	n/a	DHW Heater 1 (1)

WATER HEATERS - HEAT PUMP

01	02	03	04	05	06	07	08	09	10
Name	# of Units	Tank Vol. (gal)	NEEA Heat Pump Brand	NEEA Heat Pump Model	Tank Location	Duct Inlet Air Source	Duct Outlet Air Source	UEF	IA13 Compliant
DHW Heater 1	1	40	A. O. Smith	AOSmHPTM40 2ex	Outside	Unit 3 Zone	Unit 3 Zone	n/a	☐

CERTIFICATE OF COMPLIANCE - RESIDENTIAL PERFORMANCE COMPLIANCE METHOD — CF1R-PRF-01-E

Project Name: Idlewild Unit 3 — **Calculation Date/Time:** 2026-02-26T11:58:34-08:00 — **(Page 8 of 9)**

Calculation Description: Title 24 Analysis — **Input File Name:** 3153 Idlewild Way Unit 3.ribd25x

HVAC - HEAT PUMPS

01	02	03	04	05	06	07	08	09	10	11	12	13
					Heating			Cooling				
Name	System Type	Number of Units	Heating Efficiency Type	HSPF/HSPF2 /COP	Cap 47	Cap 17	Backup	Cooling Efficiency Type	SEER/SEER2	EER/EER2/C EER	Airflow Target	Fan Power (Watts/CFM)	Variable Speed
Heat Pump System 1	Ductless MiniSplit HP	1	HSPF2	7.7	12000	6500	Electric	SEER2/EER2	18.3	11.7	0	0	☐

INDOOR AIR QUALITY (IAQ) FANS

01	02	03	04	05	06	07	08
Dwelling Unit	Airflow (CFM)	Fan Efficiency (W/CFM)	IAQ Fan Type	Includes Heat/Energy Recovery?	IAQ Recovery Effectiveness - ASRE	Includes Fault Indicator Display?	Status
SFam IAQVentFpt	42	0.35	Exhaust	No	n/a / n/a	No	

CERTIFICATE OF COMPLIANCE - RESIDENTIAL PERFORMANCE COMPLIANCE METHOD — CF1R-PRF-01-E

Project Name: Idlewild Unit 3 — **Calculation Date/Time:** 2026-02-26T11:58:34-08:00 — **(Page 9 of 9)**

Calculation Description: Title 24 Analysis — **Input File Name:** 3153 Idlewild Way Unit 3.ribd25x

DOCUMENTATION AUTHOR'S DECLARATION STATEMENT

I, I certify that this Certificate of Compliance documentation is accurate and complete.

Documentation Author Name: Jeremy Senkevych	Documentation Author Signature: Jeremy Senkevych
Company: Grizzly HERS Testing, Inc.	Signature Date: 02-26-2026
Address: 772 Jamacha Rd #165	CEA/HEA/HERS Certification Identification (if applicable): HCM13100
City/State/Zip: El Cajon, CA 92019	Phone: (619) 905-6872

RESPONSIBLE PERSON'S DECLARATION STATEMENT

I certify the following under penalty of perjury, under the laws of the State of California:

1. The information provided on this Certificate of Compliance is true and correct.
2. I am eligible under Division 3 of the Business and Professions Code to accept responsibility for the building design or system design identified on this Certificate of Compliance (responsible designer).
3. The energy features and performance specifications, materials, components, and manufactured devices for the building design or system design identified on this Certificate of Compliance conform to the requirements of Title 24, Part 1 and Part 6 of the California Code of Regulations.
4. The building design features or system design features identified on this Certificate of Compliance are consistent with the information provided on other applicable compliance documents, worksheets, calculations, plans and specifications submitted to the enforcement agency for approval with this building permit application.
5. I understand that a registered copy of this Certificate of Compliance shall be made available with the building permit(s) issued for the building and shall be made available to the enforcement agency for all applicable inspections. I will take the necessary steps to fulfill this requirement.
6. I understand that a registered copy of this Certificate of Compliance is required to be included with the documentation the builder provides to the building owner at occupancy. I will take the necessary steps to fulfill this requirement.

Responsible Designer Name: Christopher Sawaya	Responsible Designer Signature: Christopher Sawaya
Company: Sawaya Architecture	Date Signed: 02-26-2026
Address: 3636 5th Avenue, Suite 106	License: -
City/State/Zip: San Diego, CA 92103	Phone: (619) 916-8145

Digitally signed by California Home Energy Efficiency Rating Services (CHEERS). This digital signature is provided in order to secure the content of this registered document, and in no way implies Registration Provider responsibility for the accuracy of the information.

CERTIFICATE OF COMPLIANCE - RESIDENTIAL PERFORMANCE COMPLIANCE METHOD — CF1R-PRF-01-E

Project Name: Idlewild Unit 4 — **Calculation Date/Time:** 2026-02-26T11:42:55-08:00 — **(Page 1 of 9)**

Calculation Description: Title 24 Analysis — **Input File Name:** 3153 Idlewild Way Unit 4.ribd25x

GENERAL INFORMATION

01	Project Name	Idlewild Unit 4			
02	Run Title	Title 24 Analysis			
03	Project Location	3153 Idlewild Way Unit 4			
04	City	San Diego	05	Standards Version	2025
06	Zip code	92117	07	Software Version	EnergyPro 10.0
08	Climate Zone	7	09	Front Orientation (deg/ Cardinal)	45
10	Building Type	Single family	11	Number of Dwelling Units	1
12	Project Scope	Newly Constructed	13	Number of Bedrooms	2
14	Addition Cond. Floor Area (ft²)	0	15	Number of Stories	1
16	Existing Cond. Floor Area (ft²)	n/a	17	Penetration Average U-factor	0.3
18	Total Cond. Floor Area (ft²)	650	19	Glazing Percentage (%)	16.31%
20	ADU Bedroom Count	n/a	21	ADU Conditioned Floor Area	n/a
22	Fuel Type	All electric	23	No Dwelling Units	No

COMPLIANCE RESULTS

Building Complies with Computer Performance

This building incorporates features that require field testing and/or verification by a certified ECC rater under the supervision of a CEC-approved ECC provider.

This building incorporates one or more Special Features shown below

REQUIRED SPECIAL FEATURES

The following are features that must be installed as conditions for meeting the modeled energy performance for this computer analysis.

- PV exception 2: No PV required when minimum PV size (Section 150.1(c)14) < 1.8 kWdc (0 kW)
- Northwest Energy Efficiency Alliance (NEEA) rated heat pump water heater; specific brand/model, or equivalent, must be installed

ECC FEATURE SUMMARY

The following is a summary of the features that must be field-verified by a certified ECC Rater as a condition for meeting the modeled energy performance for this computer analysis. Additional detail is provided in the building tables below. Registered CF2ds and CF3ds are required to be completed in the ECC Registry

- Indoor air quality ventilation
- Kitchen range hood
- Verified heat pump rated heating capacity

CERTIFICATE OF COMPLIANCE - RESIDENTIAL PERFORMANCE COMPLIANCE METHOD — CF1R-PRF-01-E

Project Name: Idlewild Unit 4 — **Calculation Date/Time:** 2026-02-26T11:42:55-08:00 — **(Page 2 of 9)**

Calculation Description: Title 24 Analysis — **Input File Name:** 3153 Idlewild Way Unit 4.ribd25x

Compliance Summary

	Long Term System Cost (LSC)[1]		Source Energy Use	Peak Cooling**
	Efficiency[2] ($/ft²-yr)	Total[3] ($/ft²-yr)	Total[3] (kBtu/ft²-yr)	Electricity (kWh)
Standard Design	12.45	51.60	22.61	98.6884
Proposed Design	9.8	48.74	12.1	33.982
Compliance Margins	2.65	2.92	10.51	0
	Pass	Pass	Pass	n/a
RESULT*: Complies				

[1]Long-term System Cost (LSC) is a 30-year present value cost to California's energy future. LSC is not a prediction of utility bills

[2]Efficiency measures include energy efficient improvements such as better building envelope and more efficient mechanical equipment

[3]Total includes the sum of efficiency measures, solar photovoltaic (PV) measures and battery storage measures

* Building complies when Proposed Design is equal to or less than Standard Design in all applicable compliance categories

** Peak cooling target represents 120% of the standard design building peak cooling energy use

Standard Design PV Capacity: 0.00 kWdc

CERTIFICATE OF COMPLIANCE - RESIDENTIAL PERFORMANCE COMPLIANCE METHOD — CF1R-PRF-01-E

Project Name: Idlewild Unit 4 — **Calculation Date/Time:** 2026-02-26T11:42:55-08:00 — **(Page 3 of 9)**

Calculation Description: Title 24 Analysis — **Input File Name:** 3153 Idlewild Way Unit 4.ribd25x

LSC AND SOURCE ENERGY COMPLIANCE RESULTS FOR PERFORMANCE COMPONENTS

Energy Use	Standard Design Source Energy (kBtu/ft²-yr)	Standard Design LSC[1] ($/ft²-yr)	Proposed Design Source Energy (kBtu/ft²-yr)	Proposed Design LSC[1] ($/ft²-yr)	Compliance Margin Source (kBtu/ft²-yr)	Compliance Margin LSC[1] ($/ft²-yr)
Space Heating	0.05	0.08	0.81	1.91	-0.76	-1.83
Space Cooling	0.36	3.05	0.14	1	0.22	2.06
IAQ Ventilation	0.34	1.31	0.34	1.31	0	0
Water Heating	12.34	8	1.35	5.58	10.99	2.42
Self Utilization/Flexibility Credit	n/a	n/a	0	0	0	0
Efficiency Compliance Total	**13.09**	**12.45**	**3.64**	**9.8**	**10.45**	**2.65**
Photovoltaics And Battery	n/a	n/a	0	0	0	0
Flexibility	n/a	n/a	n/a	n/a	0	n/a
Indoor Lighting	0.68	2.48	0.68	2.48	0	0
Appl. & Cooking	3.98	18.25	3.92	17.98	0.06	0.27
Plug Loads	4.72	18	4.72	18	0	0
Outdoor Lighting	0.14	0.48	0.14	0.48	0	0
TOTAL COMPLIANCE	**22.61**	**51.66**	**12.1**	**48.74**	**10.51**	**2.92**

CERTIFICATE OF COMPLIANCE - RESIDENTIAL PERFORMANCE COMPLIANCE METHOD — CF1R-PRF-01-E

Project Name: Idlewild Unit 4 — **Calculation Date/Time:** 2026-02-26T11:42:55-08:00 — **(Page 4 of 9)**

Calculation Description: Title 24 Analysis — **Input File Name:** 3153 Idlewild Way Unit 4.ribd25x

ENERGY USE INTENSITY

	Standard Design (kBtu/ft² - yr)	Proposed Design (kBtu/ft² - yr)	Margin (kBtu/ft² - yr)	Margin Percentage
Gross EUI[1]	25.29	23.92	1.37	5.42
Net EUI[2]	25.29	23.92	1.37	5.42

Notes
1. Gross EUI is Energy Use Total (not including PV) / Total Building Area.
2. Net EUI is Energy Use Total (including PV) / Total Building Area.

REQUIRED PV SYSTEMS

01	02	03	04	05	06	07	08	09	10	11	12
DC System Size (kWdc)	Exception	Module Type	Array Type	Power Electronics	OR	Azimuth (deg)	Tilt Input	Array Angle (deg)	Tilt: (x in 12)	Inverter Eff. (%)	Annual Solar Access (%)
0	No PV - required PV less than 1.8kWdc	Standard (14-17%)	Flush	none	true	n/a	n/a	n/a	n/a	n/a	

BUILDING - FEATURES INFORMATION

01	02	03	04	05	06	07
Project Name	Conditioned Floor Area (ft²)	Number of Dwelling Units	Number of Bedrooms	Number of Zones	Number of Ventilation Cooling Systems	Number of Water Heating Systems
Idlewild Unit 4	650	1	2	1	0	1

ZONE INFORMATION

01	02	03	04	05	06	07
Zone Name	Zone Type	HVAC System Name	Zone Floor Area (ft²)	Avg. Ceiling Height	Water Heating System 1	Status
Unit 4 Zone	Conditioned	Ductless Mini Split1	650	8	DHW Sys 1	New

CERTIFICATE OF COMPLIANCE - RESIDENTIAL PERFORMANCE COMPLIANCE METHOD — CF1R-PRF-01-E

Project Name: Idlewild Unit 4 — **Calculation Date/Time:** 2026-02-26T11:42:55-08:00 — **(Page 5 of 9)**

Calculation Description: Title 24 Analysis — **Input File Name:** 3153 Idlewild Way Unit 4.ribd25x

OPAQUE SURFACES SUMMARY

01	02	03	04	05	06	07	08
Name	Zone	Construction	Azimuth	Orientation	Gross Area (ft²)	Window and Door Area (ft2)	Tilt (deg)
NE Exterior Wall	Unit 4 Zone	R-21 Wall	45	Front	208	60	90
NW Exterior Wall	Unit 4 Zone	R-21 Wall	315	Right	200	40	90
SW Exterior Wall	Unit 4 Zone	R-21 Wall	225	Back	208	26	90
SE Exterior Wall	Unit 4 Zone	R-21 Wall	135	Left	200	0	90

OPAQUE SURFACES - CATHEDRAL CEILINGS

01	02	03	04	05	06	07	08	09	10
Name	Zone	Construction	Azimuth	Orientation	Area (ft²)	Skylight Area (ft²)	Roof Rise (x in 12)	CRRC Rated Roof Reflectance	CRRC Rated Roof Emittance
Roof	Unit 4 Zone	R-30 Roof No Attic	0	Flat	650	0	0	0.1	0.85

FENESTRATION / GLAZING

01	02	03	04	05	06	07	08	09	10
Name	Type	Surface	Orientation	Azimuth	Mult.	Area (ft²)	U-factor	SHGC	Rating Source
Window A	Window	NE Exterior Wall	Front	45	1	20	0.3	0.23	NFRC
Window A 2	Window	NE Exterior Wall	Front	45	1	20	0.3	0.23	NFRC
Window A 3	Window	NW Exterior Wall	Right	315	1	20	0.3	0.23	NFRC
Window A 4	Window	NW Exterior Wall	Right	315	1	20	0.3	0.23	NFRC
Window A 5	Window	SW Exterior Wall	Back	225	1	20	0.3	0.23	NFRC

LICENSED ARCHITECT
CHRISTOPHER SAWAYA
C35363
REN: 06-30-27
STATE OF CALIFORNIA

SAWAYA ARCHITECTURE

3565 7TH AVENUE
SAN DIEGO, CA 92103
SAWAYAARCHITECTURE.COM
(619) 916 - 8145

IDLEWILD ADUS

3153 IDLEWILD WAY

3153 IDLEWILD WY UNIT 1
3153 IDLEWILD WY UNIT 2
3153 IDLEWILD WY UNIT 3
3153 IDLEWILD WY UNIT 4

SAN DIEGO, CA 92117

DATE	BY	ISSUE DESCRIPTION
03-10-26	CC	SUBMITTAL

SAWAYA ARCHITECTURE

T24.4

TITLE 24

2603
PRINT TO SCALE : 24" X 36"

FENESTRATION / GLAZING

01	02	03	04	05	06	07	08	09	10
Name	Type	Surface	Orientation	Azimuth	Mult.	Area (ft^2)	U-factor	SHGC	Rating Source
Window B	Window	SW Exterior Wall	Back	225	1	6	0.3	0.23	NFRC
Total North Facing Fenestration						40			
Total East Facing Fenestration						40			
Total South Facing Fenestration						36			
Total West Facing Fenestration						0			

OPAQUE DOORS

01	02	03	04	05
Name	Side of Building	Area (ft^2)	U-factor	NFRC Rating Req.
Door 101	NE Exterior Wall	20	0.2	Yes

SLAB FLOORS

01	02	03	04	05	06	07
Name	Zone	Area (ft^2)	Perimeter (ft)	Edge Insul. R-value	Edge Insul. Depth	Heated
Slab-on-Grade	Unit 4 Zone	650	0.1	None	0	No

OPAQUE SURFACE CONSTRUCTIONS

01	02	03	04	05	06	07	08	09
Construction Name	Surface Type	Construction Type	Framing	Total Cavity R-value	Interior / Exterior Continuous R-value	U-factor	Assembly Layers	Non-Std Spray Foam
R-15 Wall	Exterior Walls	Wood Framed Wall	2x4 @ 16 in. O. C.	R-15	None / None	0.095	Inside Finish: Gypsum Board Cavity / Frame: R-15 / 2x4 Exterior Finish: 3 Coat Stucco	☐
R-30 Roof No Attic	Cathedral Ceilings	Wood Framed Ceiling	2x12 @ 16 in. O. C.	R-30	None / None	0.036	Roofing: Light Roof (Asphalt Shingle) Roof Deck: Wood Siding/sheathing/decking Cavity / Frame: R-30 / 2x12 Inside Finish: Gypsum Board	☐

WATER HEATING SYSTEMS

01	02	03	04	05	06	07	08	09
Name	System Type	Distribution Type	Water Heater Name	Number of Units	Solar Heating System	Compact Distribution	ECC Verification	Water Heater Name (#)
DHW Sys 1	Domestic Hot Water (DHW)	Standard	DHW Heater 1	1	n/a	None	n/a	DHW Heater 1 (1)

WATER HEATERS - HEAT PUMP

01	02	03	04	05	06	07	08	09	10
Name	# of Units	Tank Vol. (gal)	NEEA Heat Pump Brand	NEEA Heat Pump Model	Tank Location	Duct Inlet Air Source	Duct Outlet Air Source	UEF	JA13 Compliant
DHW Heater 1	1	40	A. O. Smith	AOSmith HPTA40 2xx	Outside	Unit 4 Zone	Unit 4 Zone	n/a	☐

HVAC - HEAT PUMPS

01	02	03	04	05	06	06b	07	08	09	10	11	12	13
			Heating					Cooling					
Name	System Type	Number of Units	Heating Efficiency Type	HSPF/HSPF2/COP	Cap 47	Cap 17	Backup	Cooling Efficiency Type	SEER/SEER2	EER/EER2/CEER	Airflow Target	Fan Power (Watts/CFM)	Variable Speed
Heat Pump System 1	Ductless MiniSplit HP	1	HSPF2	7.5	12000	6100	Electric	EER2/SEER2	14.3	11.7	0	0	☐

INDOOR AIR QUALITY (IAQ) FANS

01	02	03	04	05	06	07	08
Dwelling Unit	Airflow (CFM)	Fan Efficacy (W/CFM)	IAQ Fan Type	Includes Heat/Energy Recovery?	IAQ Recovery Effectiveness - ASRE	Includes Fault Indicator Display?	Status
SFam IAQVentRpt	42	0.35	Exhaust	No	n/a / n/a	No	

DOCUMENTATION AUTHOR'S DECLARATION STATEMENT

1. I certify that this Certificate of Compliance documentation is accurate and complete.

Documentation Author Name: Jeremy Senkevech	Documentation Author Signature: *Jeremy Senkevech*
Company: Grizzly HERS Testing, Inc.	Signature Date: 02/26/2026
Address: 772 Jamacha Rd #165	CEA/HERS/ECC Certification Identification (if applicable): RCN13100
City/State/Zip: El Cajon, CA 92019	Phone: (619) 905-0872

RESPONSIBLE PERSON'S DECLARATION STATEMENT

I certify the following under penalty of perjury, under the laws of the State of California:

1. The information provided on this Certificate of Compliance is true and correct.
2. I am eligible under Division 3 of the Business and Professions Code to accept responsibility for the building design or system design identified on this Certificate of Compliance (responsible designer).
3. The energy features and performance specifications, materials, components, and manufactured devices for the building design or system design identified on this Certificate of Compliance conform to the requirements of Title 24, Part 1 and Part 6 of the California Code of Regulations.
4. The building design features or system design features identified on this Certificate of Compliance are consistent with the information provided on other applicable compliance documents, worksheets, calculations, plans and specifications submitted to the enforcement agency for approval with this building permit application.
5. I understand that a registered copy of this Certificate of Compliance shall be made available with the building permit(s) issued for the building and shall be made available to the enforcement agency for all applicable inspections. I will take the necessary steps to fulfill this requirement.
6. I understand that a registered copy of this Certificate of Compliance is required to be included with the documentation the builder provides to the building owner at occupancy. I will take the necessary steps to fulfill this requirement.

Responsible Designer Name: Christopher Sawaya	Responsible Designer Signature: *Christopher Sawaya*
Company: Sawaya Architecture	Date Signed: 02/26/2026
Address: 3636 5th Avenue, Suite 106	License:
City/State/Zip: San Diego, CA 92103	Phone: (619) 916-8145

Digitally signed by California Home Energy Efficiency Rating Services (CHEERS). This digital signature is provided in order to secure the content of this registered document, and in no way implies Registration Provider responsibility for the accuracy of the information.

LICENSED ARCHITECT
CHRISTOPHER SAWAYA
C35363
REN: 06-30-27
STATE OF CALIFORNIA

SAWAYA ARCHITECTURE

3565 7TH AVENUE
SAN DIEGO, CA 92103
SAWAYAARCHITECTURE.COM
(619) 916 - 8145

IDLEWILD ADUS

3153 IDLEWILD WAY

3153 IDLEWILD WY UNIT 1
3153 IDLEWILD WY UNIT 2
3153 IDLEWILD WY UNIT 3
3153 IDLEWILD WY UNIT 4

SAN DIEGO, CA 92117

DATE	BY	ISSUE DESCRIPTION
03-10-26	CC	SUBMITTAL

SAWAYA ARCHITECTURE

T24.5

TITLE 24

2603
PRINT TO SCALE : 24" X 36"

LANDSCAPE NOTES

A. ALL LANDSCAPE AND IRRIGATION SHALL CONFORM TO THE STANDARDS OF THE CITY-WIDE LANDSCAPE REGULATIONS AND CITY OF SAN DIEGO'S LAND DEVELOPMENT MANUAL. LANDSCAPE STANDARDS AND ALL OTHER LANDSCAPE RELATED CITY AND REGIONAL STANDARDS.

B. TREE ROOT BARRIERS SHALL BE INSTALLED WHERE TREES ARE PLACED WITHIN 5 FEET OF PUBLIC IMPROVEMENTS INCLUDING WALKS, CURBS OR STREET PAVEMENTS OR WHERE NEW PUBLIC IMPROVEMENTS ARE PLACED ADJACENT TO EXISTING TREES. THE ROOT BARRIER WILL NOT BE WRAPPED AROUND THE ROOT BALL. SDMC 142.0403(B)(12).

C. IRRIGATION: AN AUTOMATIC, ELECTRICALLY CONTROLLED IRRIGATION SYSTEM SHALL BE PROVIDED AS REQUIRED BY SDMC 142.0403(C) FOR PROPER IRRIGATION, DEVELOPMENT, AND MAINTENANCE OF PROPOSED TREES IN A HEALTHY, DISEASE-RESISTANT CONDITION. THE DESIGN OF THE SYSTEM SHALL PROVIDE ADEQUATE SUPPORT FOR THE TREES SELECTED AND SHALL BE AN AUTOMATIC DRIP SYSTEM. ALL PROPOSED IRRIGATION SYSTEMS SHALL HAVE AN APPROVED RAIN SENSOR SHUTOFF DEVICE. SDMC 142.0403(C)(3)(D)

D. MAINTENANCE: ALL REQUIRED LANDSCAPE AREAS SHALL BE MAINTAINED BY THE PROPERTY OWNER. THE LANDSCAPE AND IRRIGATION AREAS IN THE PUBLIC RIGHT-OF-WAY SHALL BE MAINTAINED BY THE PROPERTY OWNER. THE LANDSCAPE AREAS SHALL BE MAINTAINED FREE OF DEBRIS AND LITTER AND ALL PLANT MATERIAL SHALL BE MAINTAINED IN A HEALTHY GROWING CONDITION. DISEASED OR DEAD PLANT MATERIAL SHALL BE SATISFACTORILY TREATED OR REPLACED WITH LIKE KIND PER THE CONDITIONS OF THE PERMIT.

E. IF ANY REQUIRED LANDSCAPE INDICATED ON THE APPROVED CONSTRUCTION DOCUMENT PLANS IS DAMAGED OR REMOVED DURING DEMOLITION OR CONSTRUCTION, IT SHALL BE REPAIRED AND/OR REPLACED IN KIND AND EQUIVALENT SIZE PER THE APPROVED DOCUMENTS TO THE SATISFACTION OF THE DEVELOPMENT SERVICES DEPARTMENT WITHIN 30 DAYS OF DAMAGE.

F. TREES SHALL BE MAINTAINED SO THAT ALL BRANCHES OVER PEDESTRIAN WALKWAYS ARE 6 FEET ABOVE THE WALKWAY GRADE AND BRANCHES OVER VEHICULAR TRAVEL WAYS ARE 16 FEET ABOVE THE GRADE OF THE TRAVEL WAY PER THE SDMC 142.0403(B)(10).

G. ALL PRUNING SHALL COMPLY WITH THE STANDARDS OF THE AMERICAN NATIONAL STANDARDS INSTITUTE (ANSI) FOR TREE CARE OPERATIONS AND THE INTERNATIONAL SOCIETY OF ARBORICULTURE (ISA) FOR TREE PRUNING. TOPPING OF TREES IN NOT PERMITTED.

H. EXISTING TREES TO REMAIN ON SITE WITHIN THE AREA OF WORK WILL BE PROTECTED IN PLACE. THE FOLLOWING PROTECTION MEASURES WILL BE PROVIDED:
1. A BRIGHT YELLOW OR ORANGE TEMPORARY FENCE WILL BE PLACED AROUND EXISTING TREES AT THE DRIP LINE.
2. STOCKPILING, TOPSOIL DISTURBANCE, VEHICLE USE, AND MATERIAL STORAGE OF ANY KIND IS PROHIBITED WITHIN THE DRIPLINE.
3. ROOT SYSTEMS OF EXISTING TREES WILL BE PROTECTED FROM FLOODING, EROSION, CHEMICAL SPILLS, AND EXCESSIVE WETTING AND DRYING DURING DEWATERING.
4. THE EXISTING GRADE WILL BE MAINTAINED WITHIN THE DRIP LINE OF EXISTING TREES.
5. ROOTS OF EXISTING TREES WILL BE CUT APPROXIMATELY 6" BACK FROM NEW CONSTRUCTION.
6. A CERTIFIED CONSULTING ARBORIST SHALL OVERSEE PRUNING OF THE ROOTS 4" OR GREATER IN DIAMETER.
7. MAINTAIN AND DOCUMENT A TREE WATERING SCHEDULE DURING CONSTRUCTION.
8. ALL DAMAGED TREES WILL BE REPLACED WITH ONE OF EQUAL OR GREATER SIZE.

I. MULCH: ALL REQUIRED PLANTING AREAS SHALL BE COVERED WITH MULCH GROUNDCOVER TO A MINIMUM DEPTH OF 3". ALL EXPOSED SOIL AREAS WITHOUT VEGETATION SHALL ALSO BE MULCHED TO THIS MINIMUM DEPTH PER THE LAND DEVELOPMENT MANUAL, LANDSCAPE STANDARDS. SDMC 142.0413(C).

J. A MINIMUM ROOT ZONE OF 40SF, IN AREA SHALL BE PROVIDED FOR ALL TREES. THE MINIMUM DIMENSION FOR THIS AREA SHALL BE 5', PER SDMC 142.0403(B)(5).

SEE ARCHITECTURE SITE PLAN FOR ALL ADDITIONAL SITE NOTES.

MINIMUM TREE SEPARATION DISTANCE

TRAFFIC SIGNALS (STOP SIGNS)	= 20 FEET
UNDERGROUND UTILITY LINES	= 5 FEET
ABOVE GROUND UTILITY STRUCTURES	= 10 FEET
DRIVEWAY (ENTRIES)	= 10 FEET
INTERSECTIONS (INTERSECTING CURB LINES OF TWO STREETS)	= 25 FEET
SEWER LINES	= 10 FEET

STREET TREE SHADING COMPLIANCE

THROUGHWAY ZONE:	247	SF
TREE CANOPY SHADED AREA:	142	SF
TOTAL THROUGHWAY AREA:	247	SF
TOTAL SHADED AREA ACHIEVED BY TREE CANOPIES:	142	SF
PERCENT ACHIEVED OF SHADED AREA:	**57%**	
NUMBER OF EXISTING TREES IN FURNISHING ZONE:	1	
NUMBER OF NEW TREES IN FURNISHING ZONE:	1	

TREE LEGEND

STREET TREE REQUIREMENTS:
STREET TREES REQUIRED
STREET: (2) TOTAL

EXISTING TREES: (1)

PROPOSED TREES:
METROSIDEROS EXCELSUS / NEW ZEALAND CHRISTMAS TREE (STANDARD).

MEDIUM SCALE, CANOPY, FLOWERING TREE
(30'-40'HEIGHT X 20-35'WIDTH)

QUANTITY: 1
BOX: 24"

ADU ON-SITE TREE REQUIREMENT:
2 TREES REQUIRED PER 5,000SF OF LOT AREA FOR ADU
5,793 SF = LOT AREA
5,793 SF/5,000 SF = 2 TREE REQUIREMENT

PROPOSED METROSIDEROS EXCELSUS / NEW ZEALAND CHRISTMAS TREE (STANDARD).

MEDIUM SCALE, CANOPY, FLOWERING TREE
(30'-40'HEIGHT X 20-35'WIDTH)

QUANTITY: 1
BOX: 24"

IRRIGATION LEGEND

RAINBIRD - LOW FLOW CONTROL ZONE VALVE KIT W/ANTI-SIPHON VALVE, XACZ-075-PRF-BF INSTALL ISOLATION PVC BALL VALVE AT ALL VALVE ASSEMBLIES. MAINLINE SIZE.

RAINBIRD - XF
SERIES DRIPLINE. XFD-09-12-250 30 PSI
0.9GPH
INSTALL BELOW GRADE AND STAKED TO GRADE WITH RAINBIRD TIE DOWN STAKES (OR APPROVED EQUAL) AT 12" INTERVALS MINIMUM, TYP. INSTALL PER MANUFACTURER'S SPECIFICATIONS WITH APPROPRIATE COMPRESSION FITTINGS PER THE DETAILS. INSTALLED TUBING SHALL BE COVERED W/ 3" LAYER OF GROUND COVER MULCH AS SPECIFIED ON PLAN. PROVIDE EVEN WATER DISTRIBUTION FOR ALL PLANTINGS. CONTRACTOR SHALL ADJUST LAYOUT IN FIELD ACCORDING TO PLANTING LAYOUT AND CONTAINER SIZE BEING WATERED - VERIFY IN FIELD. MAXIMUM TUBING RUN LENGTH - 230'

NOTE:DRIPLINE FLUSH VALVE SHALL BE INSTALLED AT END OF EACH SHRUB AND TREE ASSEMBLY AS INDICATED IN INSTALLATION DETAILS.

RAINBIRD - XFD ON-SURFACE DRIPLINE RISER ASSEMBLY, PVC TO DISTRIBUTION TUBING POINT OF CONNECTION - INSTALL PER MANUFACTURER'S SPECIFICATIONS WITH APPROPRIATE COMPRESSION FITTINGS PER DETAILS.

RAINBIRD - ESP1SM6 SERIES CONTROLLER - ESP-SMT6, 6 STATION EXTERIOR NOTE: VERIFY LOCATION WITH GENERAL CONTRACTOR. GENERAL CONTRACTOR TO PROVIDE POWER TO NEW CONTROLLER.

RAINBIRD - ESP1SMT RAIN SENSOR SHUT-OFF INCLUDED WITH ESP1SMT CONTROLLER. DETAIL SHOWS RAIN SENSOR INSTALLATION.

LASCO SCHEDULE 80PVC BALL VALVE AT POINT OF CONNECTION AND AT ALL VALVE ASSEMBLIES.

POINT OF CONNECTION - IRRIGATION POINT OF CONNECTION TO BE COORDINATED WITH GENERAL CONTRACTOR VERIFIED IN-FIELD.

PRESSURE MAINLINE - SCHEDULE 40PVC

NON-PRESSURE LATERAL LINE - SCHEDULE 40 PVC

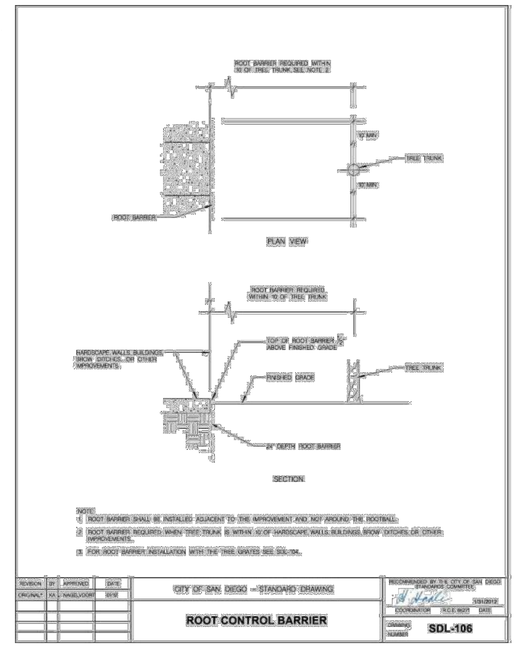

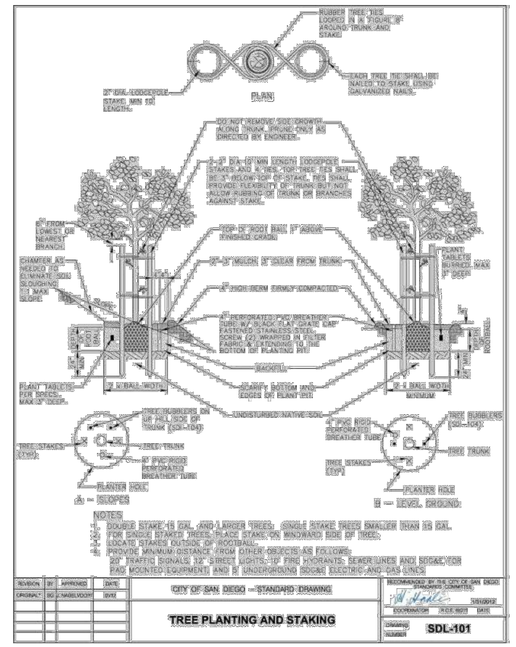

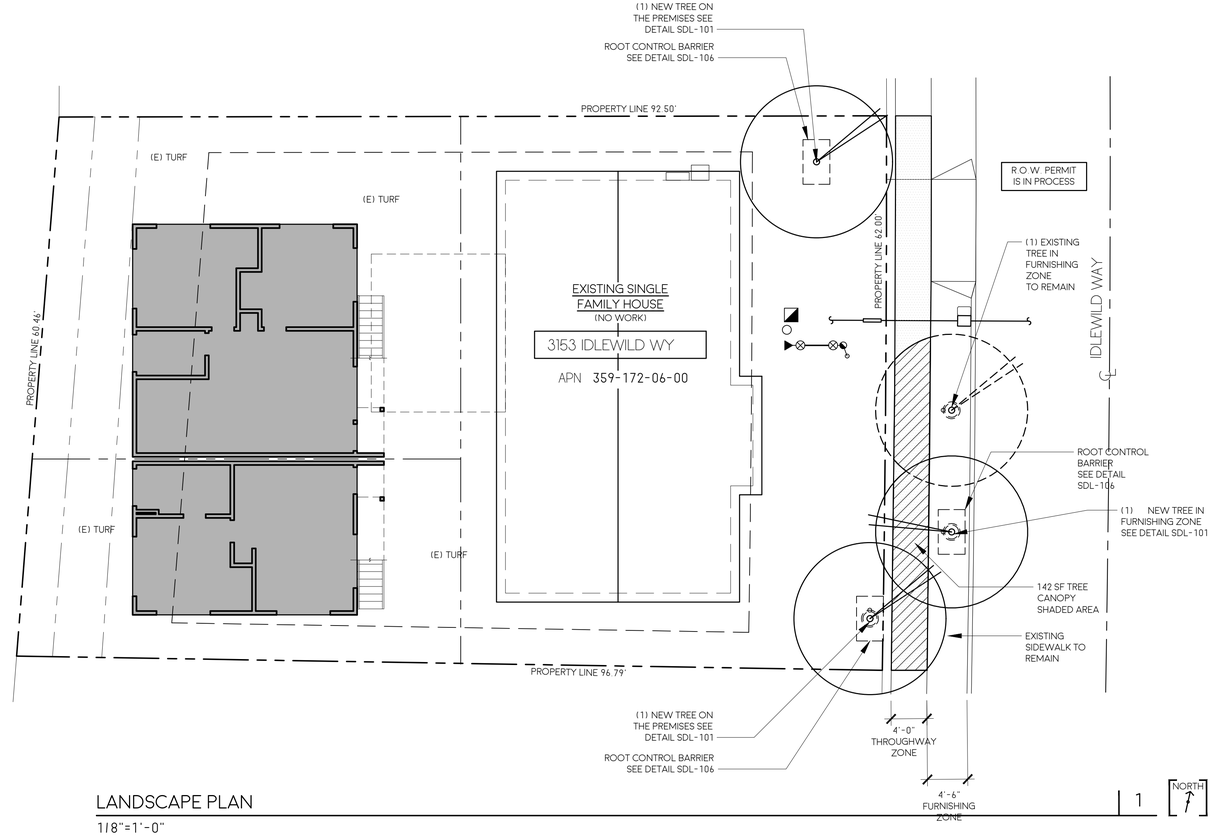

LANDSCAPE PLAN
1/8"=1'-0"

1

LICENSED ARCHITECT
CHRISTOPHER SAWAYA
C35363
REN. 06-30-27
STATE OF CALIFORNIA

SAWAYA ARCHITECTURE
3565 7TH AVENUE
SAN DIEGO, CA 92103
SAWAYAARCHITECTURE.COM
(619) 916 - 8145

IDLEWILD ADUS

3153 IDLEWILD WAY

3153 IDLEWILD WY UNIT 1
3153 IDLEWILD WY UNIT 2
3153 IDLEWILD WY UNIT 3
3153 IDLEWILD WY UNIT 4

SAN DIEGO, CA 92117

DATE	BY	ISSUE DESCRIPTION
03-10-26	CC	SUBMITTAL

SAWAYA ARCHITECTURE

L1

LANDSCAPE PLAN

2603
PRINT TO SCALE : 24" X 36"