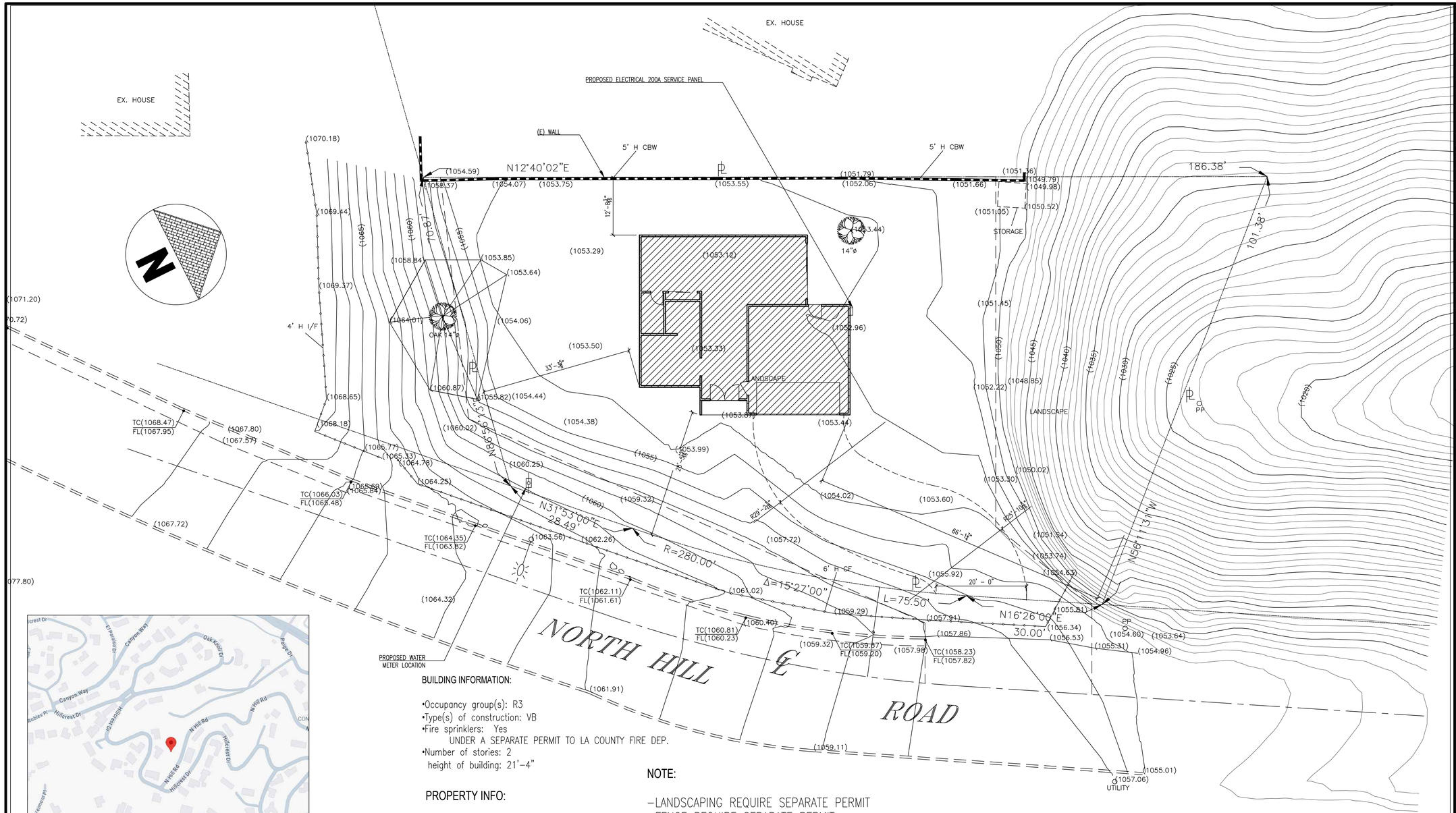

1 SITE PLAN
3/32" = 1' - 0"

2 VICINITY MAP
N.T.S.

1. IT IS THE OWNER'S AND THE CONTRACTOR'S RESPONSIBILITY TO REPAIR ALL DAMAGE TO THE EXISTING PUBLIC IMPROVEMENTS DUE TO THE PROPOSED CONSTRUCTION ACTIVITIES AND TO ADDRESS ALL REPAIRS REQUESTED BY THE PUBLIC WORKS INSPECTOR BASED ON THE INSPECTOR'S REVIEW OF THE CURRENT CONDITION OF THE SAID PUBLIC IMPROVEMENTS
2. UNDERGROUNDING OF ALL EXISTING AND PROPOSED UTILITY LINES IS REQUIRED AS PER CITY OF POMONA MUNICIPAL CODE SECTION 62-31(B)(1).
3. THE PARKWAY LANDSCAPING SHALL BE MAINTAINED BY THE PROPERTY OWNER PER CITY OF POMONA MUNICIPAL CODE SECTION 46-496.
4. THE PROPERTY ABUTTING SIDEWALK, PARKWAY AND ALLEY, AS APPLICABLE SHALL BE MAINTAINED FREE OF WEEDS, RUBBISH AND REFUSE BY THE PROPERTY OWNER, AS REQUIRED BY THE CITY'S MUNICIPAL CODE SECTION 18-261.
5. UNOBSTRUCTED VISIBILITY SHALL BE ENSURED AT ALL INTERSECTIONS AND DRIVEWAYS ALONG THE PROJECT BOUNDARIES, IN COMPLIANCE WITH CITY STANDARD A-34-11.
6. IT IS THE OWNER AND CONTRACTOR'S RESPONSIBILITY TO ENFORCE ANY AND ALL BEST MANAGEMENT PRACTICES (BMPs) FOR THE DURATION OF THE PROJECT, AS REQUIRED BY THE CITY'S MUNICIPAL CODE SECTION 74-343

BUILDING INFORMATION:

- Occupancy group(s): R3
- Type(s) of construction: VB
- Fire sprinklers: Yes
  UNDER A SEPARATE PERMIT TO LA COUNTY FIRE DEP.
- Number of stories: 2
  height of building: 21'-4"

PROPERTY INFO:

ADDR: 935 N HILL ROAD
APN: 8360-034-002
PROPERTY TYPE: VACANT LAND
REGION / CLUSTER: 06/06134
LOT SQUARE FOOTAGE: 13,580 SF

SCOPE OF WORK:

PROPOSED FOR NEW SINGLE FAMILY HOUSE

TOTAL SQUARE FOOTAGE: 1,528 SF
BUILDING HEIGHTS: 21'-4"
LOT COVERAGE: 11.92%
SQUARE FOOTAGE 1ST FLOOR: 1,033 SF
SQUARE FOOTAGE 2ND FLOOR: 495 SF

GARAGE: 554 SF
PORCH: 32 SF
BED/BATH: 1/2.5

NOTE:

- LANDSCAPING REQUIRE SEPARATE PERMIT
- FENCE REQUIRE SEPARATE PERMIT
- SOLAR PANEL REQUIRE FOR ALL NEW CONSTRUCTION, SEPARATE PERMIT IS REQUIRED
- NO GAS, ELECTRIC ONLY
- THE P.V. PERMIT SHALL BE FINALLED BEFORE THE BUILDING PERMIT SHALL BE FINALLED

ALL WORK SHALL CONFORM TO THE 2022 CALIFORNIA CODES

2022 California Building Code
2022 California Residential Code
2022 California Electrical Code
2022 California Mechanical Code
2022 California Plumbing Code
2022 California Fire Code
2022 California Energy Code
2022 California Green Building Standards Code
2022 California Historical Building Code
2022 California Existing Building Code
2022 California Referenced Standard Code
2022 California Administrative Standard Code
City of Pomona Municipal Code

INDEX:

A-1: SITE PLAN
A-2: FLOOR PLAN/WINDOW&DOOR
A-3: ELEVATION/ROOF PLAN
A-4: ELECTRICAL PLAN
A-5: SECTION PLAN/AGING IN PLACE

S-1: STRUCTURAL GENERAL INFO
S-2: STRUCTURAL DETAIL
S-3: STRUCTURAL FOUNDATION/FRAMING PLAN
SSW1: STRONG WALL DETAIL

T1, T2, T3: TITLE 24
P1,P2,P2.1,P3,P4,P5,P6: PLUMBING PLAN
GREEN BUILDING PLAN

Local Design Criteria: (ASCE7-16)

Seismic Design: Category 'D', 'E' or 'F' as determined by USGS Maps and CBC Chapter 16
Wind: (ASCE7-16)
Rainfall: 2"/hr.
Climate Zone: 9
Flood Zone: X

Risk Category I: 89mph, Exposure 'C'
Risk Category II: 96 mph, Exposure 'C'
Risk Category III: 102 mph, Exposure 'C'
Risk Category IV: 107 mph, Exposure 'C'

1ST BUILDING 3/26/25
2ND BUILDING 5/11/25

CONSULTANTS

TUNDRA CONSTRUCTION DESIGN & BUILD
15501 CLAYCLIFF CT, HACIENDA HEIGHTS, CA 91745
TEL: 626-679-8335
CONTRACTOR LIC#: 1040237

STRUCTURAL ENGINEER
DAVID LI & ASSOCIATES
1305 N SAN GABRIEL BLVD #101
ROSEMEAD, CA 91770
PHONE NUMBER: 626-288-1216
LIC: 058075

T24
PERFECT DESIGN & INVESTMENT, INC.
2416 W VALLEY BLVD
ALHAMBRA, CA 91803
626-289-8808

DESIGNER SIGNATURE:
HONG LIU

OWNER HAO DONG ZHANG
626-217-3511

935 N HILL ROAD
POMONA, CA 91768

MARK	DATE	DESCRIPTION

PROJECT NO: ----
CAD DWG FILE: 739 COLUSA
DRAWN BY: TUNDRA CONSTRUCTION
CHK'D BY: ###
COPYRIGHT:

SHEET TITLE
SITE PLAN & VICINITY MAP

A-1
SHEET SHEET INDEX OF TOTAL SHEETS

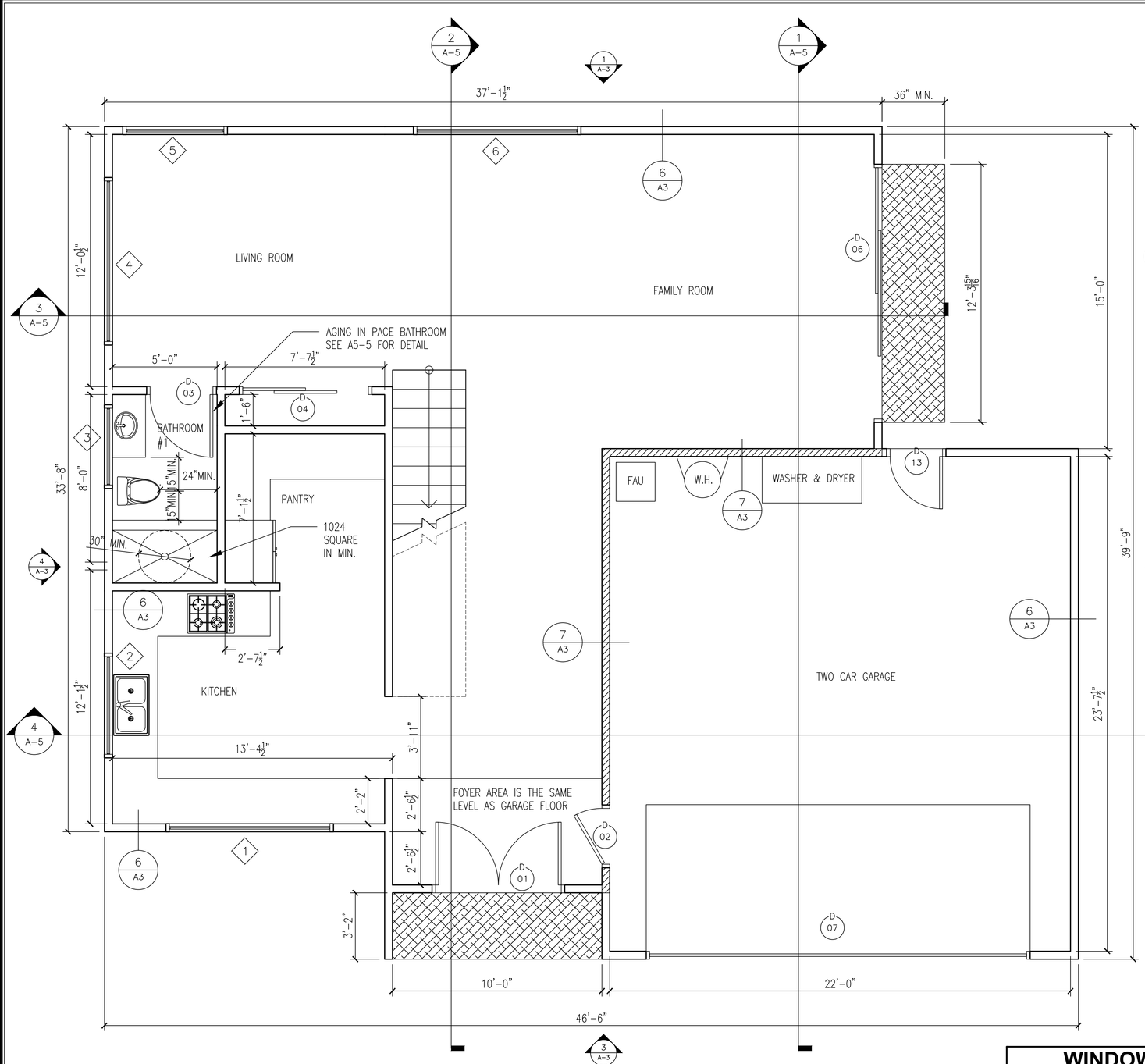

2 1ST FLOOR PLAN
1/4" = 1' - 0"

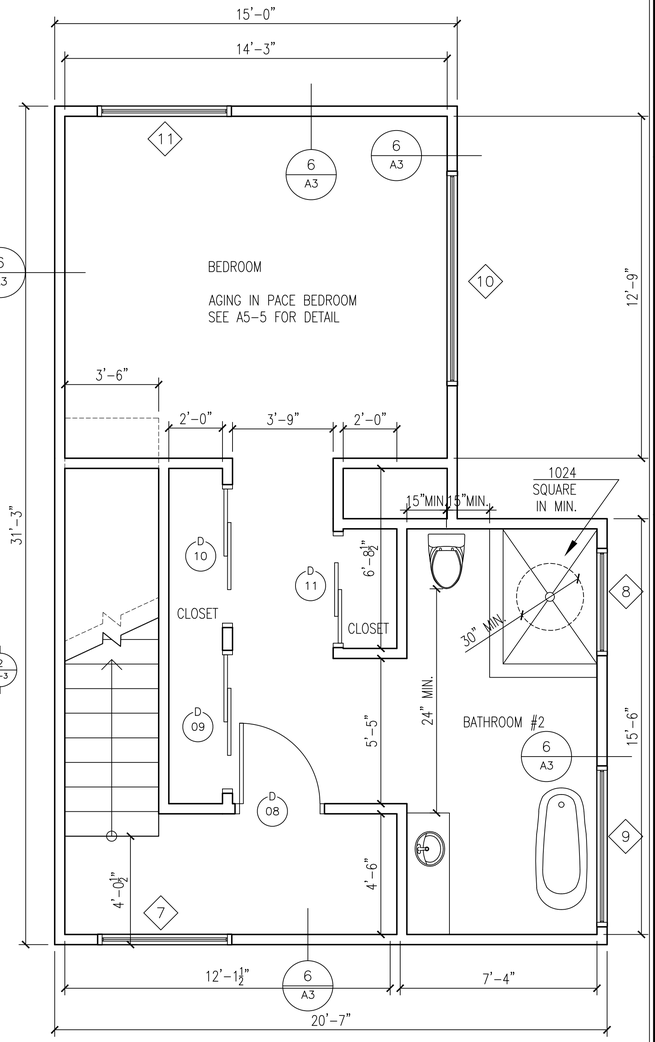

1 2ND FLOOR PLAN
1/4" = 1' - 0"

FIRE WALL WITH 2 LAYER
TYPE X DRYWALL, SEE A3-7

EXTERIOR DOOR LANDING
SLOPE NOT TO EXCEED ¼" PER FOOT

WINDOW SCHEDULE

Number	SIZE		MATERIAL	Remarks
	Width	Height		
1	8'-0"	3'-6"	DOUBLE PANE, VINYL	XOX
2	5'-0"	3'-6"	DOUBLE PANE, VINYL	XO
3	4'-0"	1'-4"	DOUBLE PANE, VINYL	XO
4	8'-0"	3'-6"	DOUBLE PANE, VINYL	XO
5	5'-0"	3'-6"	DOUBLE PANE, VINYL	XO
6	8'-0"	3'-6"	DOUBLE PANE, VINYL	XO
7	5'-0"	3'-2"	DOUBLE PANE, VINYL	XO
8	4'-0"	1'-4"	DOUBLE PANE, VINYL	XO W/ TEMPERED GLASS
9	6'-0"	1'-4"	DOUBLE PANE, VINYL	XO W/ TEMPERED GLASS
10	8'-0"	2'-10"	DOUBLE PANE, VINYL	XO EGRESS
11	5'-0"	3'-6"	DOUBLE PANE, VINYL	XO

U-FACTOR: 0.3 SHGC: 0.23
THE LOAD RESISTANCE OF GLASS UNDER UNIFORM LOAD
SHALL BE DETERMINED IN ACCORDANCE WITH ASTM E1300

DOOR AND FRAME SCHEDULE

MARK	DOOR SIZE			NOTES
	WD	HGT	THK	
1	6'-0"	7'-0"	1 3/4"	Exterior double swing
2	2'-8"	7'-0"	1 3/4"	1 Hr fire door
3	3'-0"	7'-0"	1 3/4"	Interior single swing
4	6'-0"	7'-0"	1 9/16"	Closet door
6	12'-0"	7'-0"	1 9/16"	Glass sliding door w/ tempered glass
7	18'-0"	7'-0"	1 9/16"	Over head garage door
8	3'-0"	7'-0"	1 3/4"	Interior single swing
9	5'-0"	7'-0"	1 9/16"	Closet door
10	5'-0"	7'-0"	1 9/16"	Closet door
11	4'-0"	7'-0"	1 9/16"	Closet door
13	2'-6"	7'-0"	1 3/4"	Exterior single swing

CONSULTANTS

TUNDRA CONSTRUCTION DESIGN & BUILD
15501 CLAYCLIFF CT, HACIENDA HEIGHTS, CA 91745
TEL: 626-679-8335
CONTRACTOR LIC#: 1040237

STRUCTURAL ENGINEER
DAVID LI & ASSOCIATES
1305 N SAN GABRIEL BLVD #101
ROSEMEAD, CA 91770
PHONE NUMBER: 626-288-1216
LIC: 058075

T24
PERFECT DESIGN & INVESTMENT, INC.
2416 W VALLEY BLVD
ALHAMBRA, CA 91803
626-289-8808

DESIGNER SIGNATURE:
HONG LIU

OWNER **HAO DONG ZHANG**
626-217-3511

935 N HILL ROAD
POMONA, CA 91768

MARK	DATE	DESCRIPTION

PROJECT NO: ----
CAD DWG FILE: **739 COLUSA**
DRAWN BY: **TUNDRA CONSTRUCTION**
CHK'D BY: ####
COPYRIGHT:

SHEET TITLE
FLOOR PLAN
WINDOW & DOOR SCHEDULE

A-2

SHEET **SHEET INDEX** OF **TOTAL SHEETS**

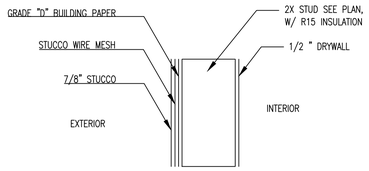

7 EXTERIOR WALL ASSEMBLY
N.T.S.

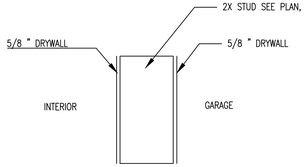

6 1 HR FIRE RATED WALL
N.T.S.

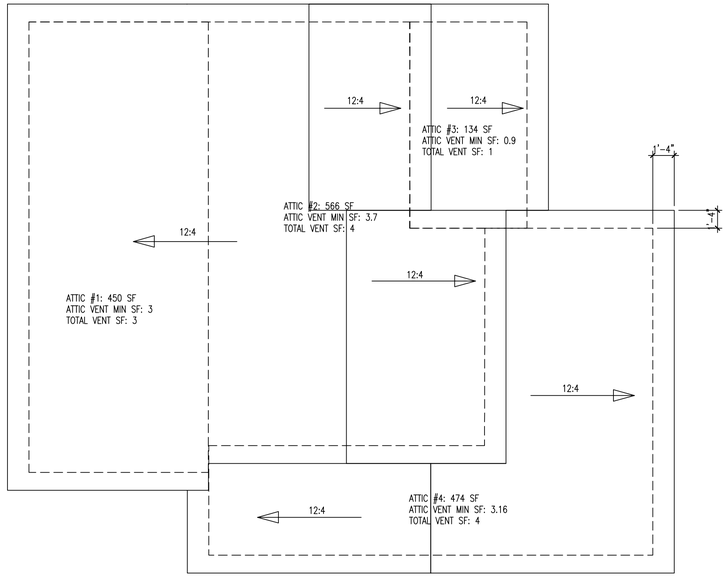

5 ROOF PLAN / ATTIC S.F.
3/16" = 1' - 0"

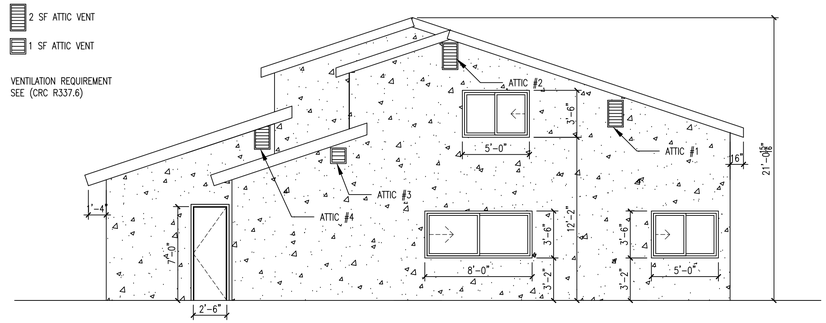

1 WEST ELEVATION
3/16" = 1' - 0"

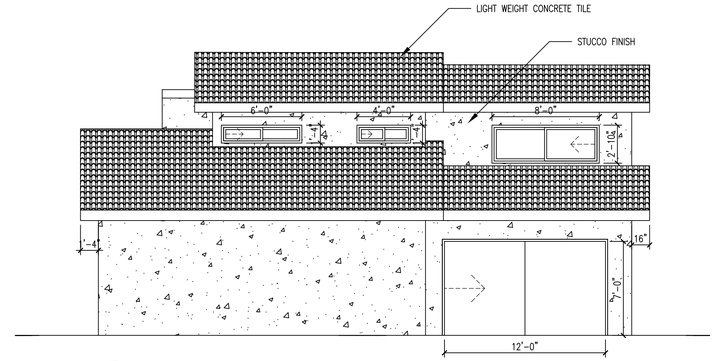

2 NORTH ELEVATION
3/16" = 1' - 0"

TILE ROOF

STUCCO WALL FINISH

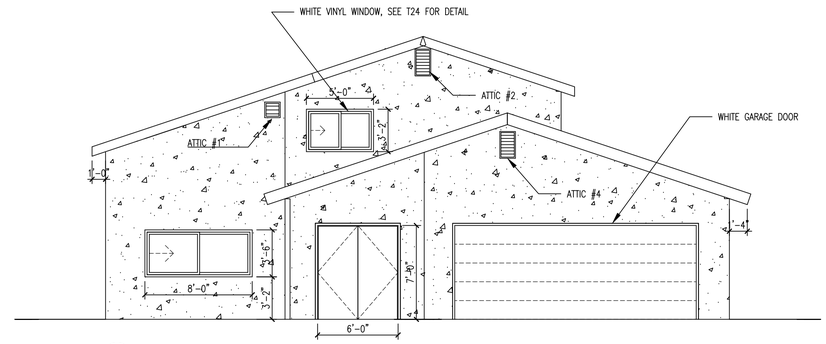

3 EAST ELEVATION
3/16" = 1' - 0"

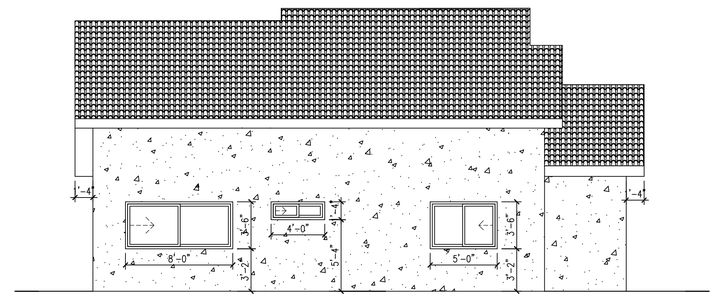

4 SOUTH ELEVATION
3/16" = 1' - 0"

CONSULTANTS

TUNDRA CONSTRUCTION DESIGN & BUILD
15501 CLAYCLIFF CT, HACIENDA HEIGHTS, CA 91745
TEL: 626-679-8335
CONTRACTOR LIC#: 1040237

STRUCTURAL ENGINEER
DAVID LI & ASSOCIATES
1305 N SAN GABRIEL BLVD #101
ROSEMEAD, CA 91770
PHONE NUMBER: 626-288-1216
LIC: 058075

T24
PERFECT DESIGN & INVESTMENT, INC.
2416 W VALLEY BLVD
ALHAMBRA, CA 91803
626-289-8808

DESIGNER SIGNATURE:

HONG LIU

OWNER **HAO DONG ZHANG**
626-217-3511

935 N HILL ROAD
POMONA, CA 91768

MARK	DATE	DESCRIPTION

PROJECT NO:	----
CAD DWG FILE:	**730 COLUSA**
DRAWN BY:	**TUNDRA CONSTRUCTION**
CHK'D BY:	**###**
COPYRIGHT:	

SHEET TITLE

ELEVATION
ROOF PLAN

A-3

SHEET **SHEET INDEX** OF **TOTAL SHEETS**

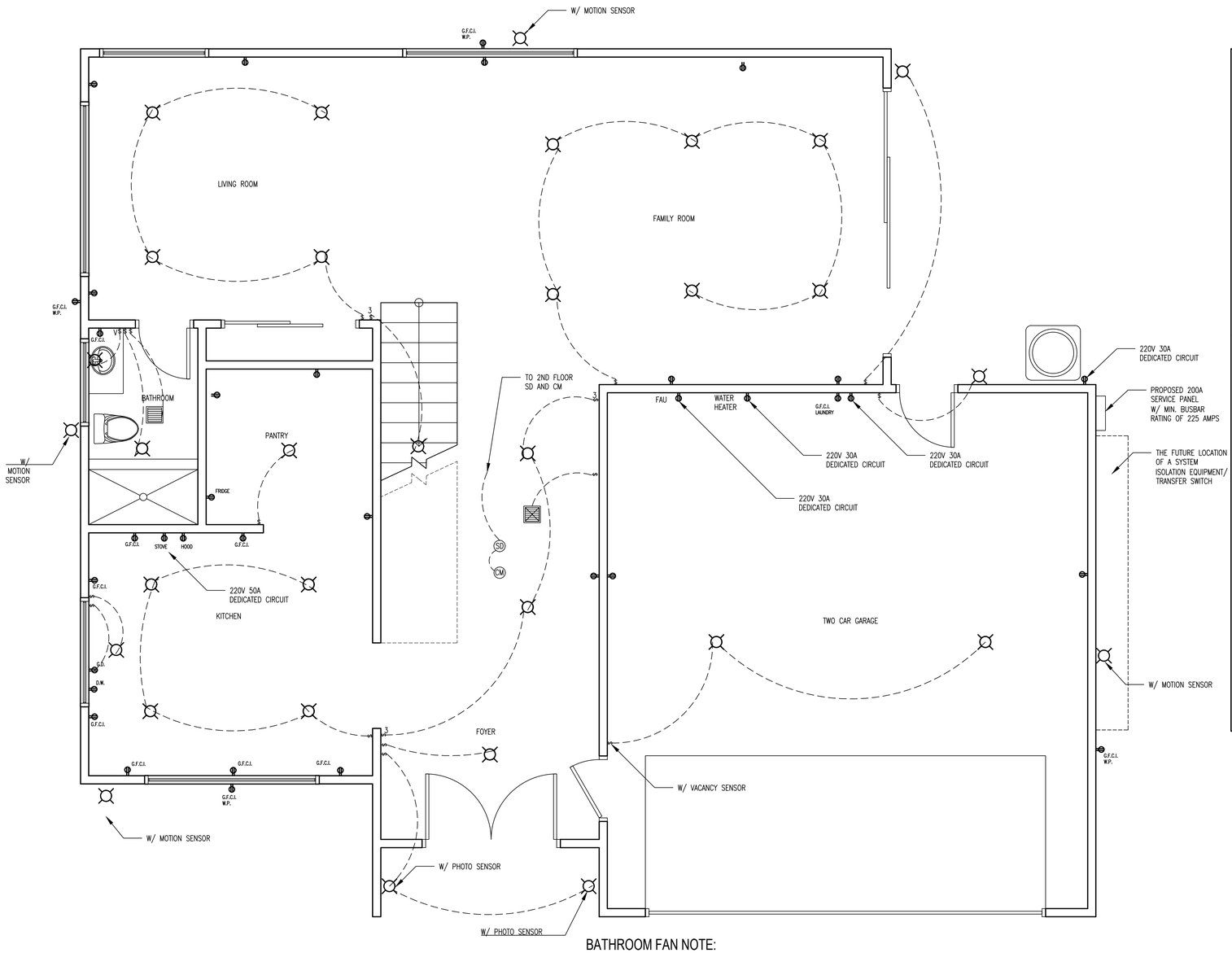

2 1ST FLOOR ELECTRICAL PLAN
3/8" = 1' - 0"

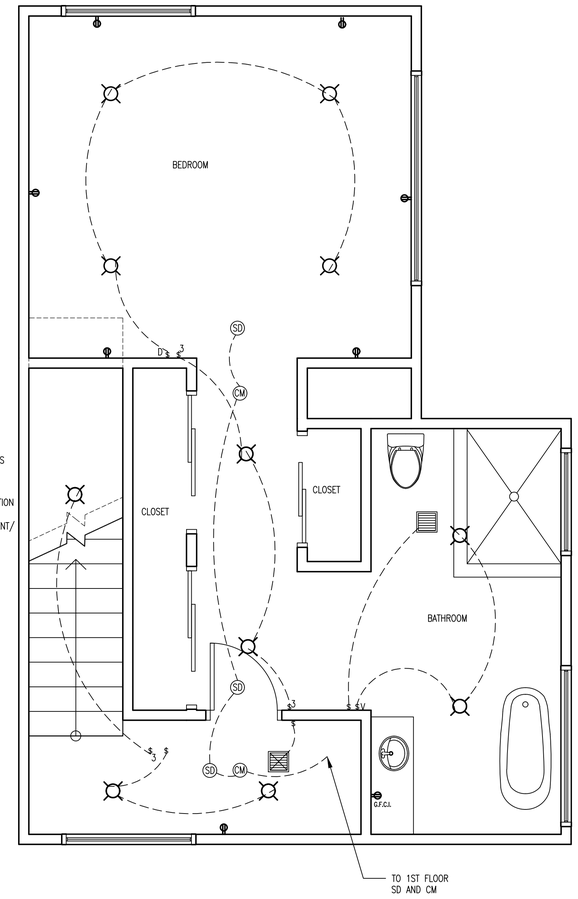

1 2ND FLOOR ELETRICAL PLAN
3/8" = 1' - 0"

BATHROOM FAN NOTE:

HUMIDITY CONTROLS SHALL BE CAPABLE OF ADJUSTMENT BETWEEN A RELATIVE HUMIDITY RANGE OF <= 50% TO A MAX. 80%. A HUMIDITY CONTROL MAY UTILIZE MANUAL OR AUTOMATIC MEANS OF ADJUSTMENT.

A HUMIDITY CONTROL MAY BE A SEPARATE COMPONENT TO THE EXHAUST FAN AND IS NOT REQUIRED TO BE INTEGRAL, CGBSC 4.506.1

NOTE:

1, A minimum of four branch circuits shall be identified and have their source of supply collocated at a single panelboard suitable to be supplied by the ESS. At least one circuit shall supply the refrigerator, one lighting circuit shall be located near the primary egress and at least one circuit shall supply a sleeping room receptacle outlet.

2, HOOD NEED TO BE 110 CFM MIN.

- LIGHTING FIXTURE
- (SD) SMOKE DETECTOR
- (CM) CARBON MONOXIDE DETECTOR
- BATHROOM EXHAUST FAN, 50 CFM
- 120V OUTLET W/ A.F.C.I. PROTECTION
- G.F.C.I. 120V G.F.C.I. PROTECTED OUTLET
- $ SWITCH
- G.F.C.I. W.P. 120V G.F.C.I. PROTECTED OUTLET W/ WEATHER PROOF
- $3 3-WAY SWITCH
- $V VACANCY SENSOR SWITCH
- $D DIMMER SWITCH
- INDOOR AIR QUALITY FAN

CONSULTANTS

TUNDRA CONSTRUCTION DESIGN & BUILD
15501 CLAYCLIFF CT, HACIENDA HEIGHTS, CA 91745
TEL: 626-679-8335
CONTRACTOR LIC#: 1040237

STRUCTURAL ENGINEER
DAVID LI & ASSOCIATES
1305 N SAN GABRIEL BLVD #101
ROSEMEAD, CA 91770
PHONE NUMBER: 626-288-1216
LIC: 058075

T24
PERFECT DESIGN & INVESTMENT, INC.
2416 W VALLEY BLVD
ALHAMBRA, CA 91803
626-289-8808

DESIGNER SIGNATURE:
HONG LIU

OWNER **HAO DONG ZHANG**
626-217-3511

935 N HILL ROAD
POMONA, CA 91768

MARK	DATE	DESCRIPTION

PROJECT NO:	----
CAD DWG FILE:	**730 COLUSA**
DRAWN BY:	**TUNDRA CONSTRUCTION**
CHK'D BY:	**HH**
COPYRIGHT:	

SHEET TITLE

ELECTRICAL

A-4

SHEET **SHEET INDEX** OF **TOTAL SHEETS**

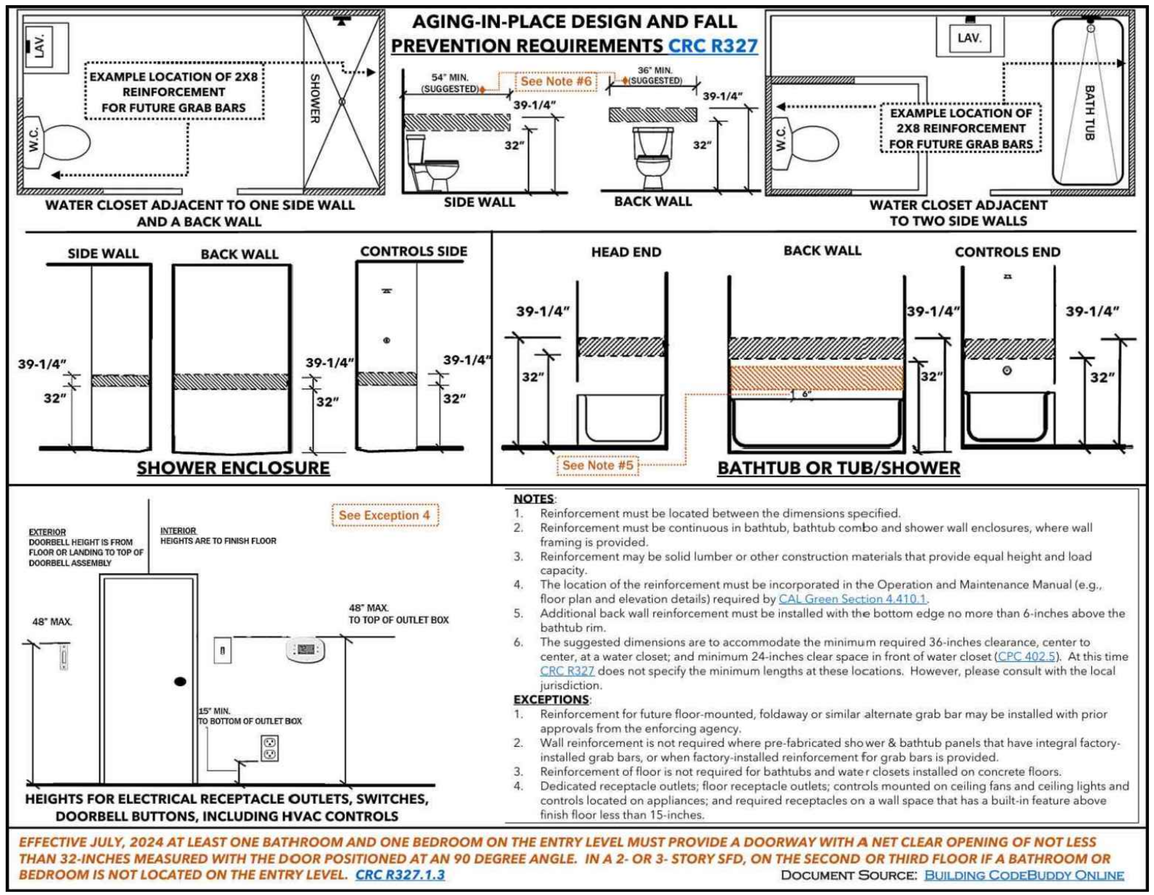

NOTES:

1. Reinforcement must be located between the dimensions specified.
2. Reinforcement must be continuous in bathtub, bathtub combo and shower wall enclosures, where wall framing is provided.
3. Reinforcement may be solid lumber or other construction materials that provide equal height and load capacity.
4. The location of the reinforcement must be incorporated in the Operation and Maintenance Manual (e.g., floor plan and elevation details) required by CAL Green Section 4.410.1.
5. Additional back wall reinforcement must be installed with the bottom edge no more than 6-inches above the bathtub rim.
6. The suggested dimensions are to accommodate the minimum required 36-inches clearance, center to center, at a water closet; and minimum 24-inches clear space in front of water closet (CPC 402.5). At this time CRC R327 does not specify the minimum lengths at these locations. However, please consult with the local jurisdiction.

EXCEPTIONS:

1. Reinforcement for future floor-mounted, foldaway or similar alternate grab bar may be installed with prior approvals from the enforcing agency.
2. Wall reinforcement is not required where pre-fabricated shower & bathtub panels that have integral factory-installed grab bars, or when factory-installed reinforcement for grab bars is provided.
3. Reinforcement of floor is not required for bathtubs and water closets installed on concrete floors.
4. Dedicated receptacle outlets; floor receptacle outlets; controls mounted on ceiling fans and ceiling lights and controls located on appliances; and required receptacles on a wall space that has a built-in feature above finish floor less than 15-inches.

EFFECTIVE JULY, 2024 AT LEAST ONE BATHROOM AND ONE BEDROOM ON THE ENTRY LEVEL MUST PROVIDE A DOORWAY WITH A NET CLEAR OPENING OF NOT LESS THAN 32-INCHES MEASURED WITH THE DOOR POSITIONED AT AN 90 DEGREE ANGLE. IN A 2- OR 3- STORY SFD, ON THE SECOND OR THIRD FLOOR IF A BATHROOM OR BEDROOM IS NOT LOCATED ON THE ENTRY LEVEL. CRC R327.1.3

DOCUMENT SOURCE: BUILDING CODEBUDDY ONLINE

5 AGING IN PLACE DETAIL
N.T.S.

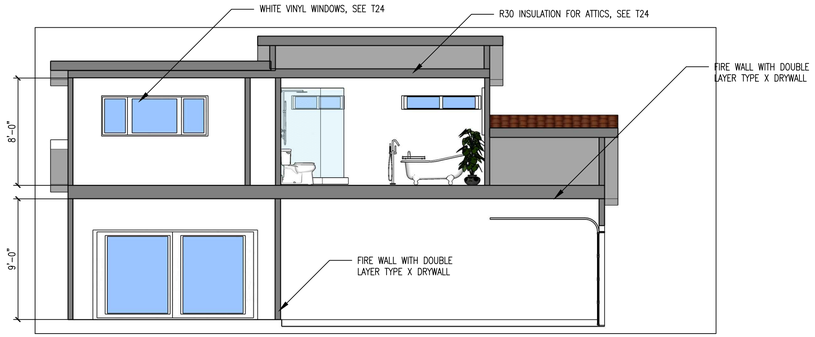

1 ELEVATION
3/16" = 1' - 0"

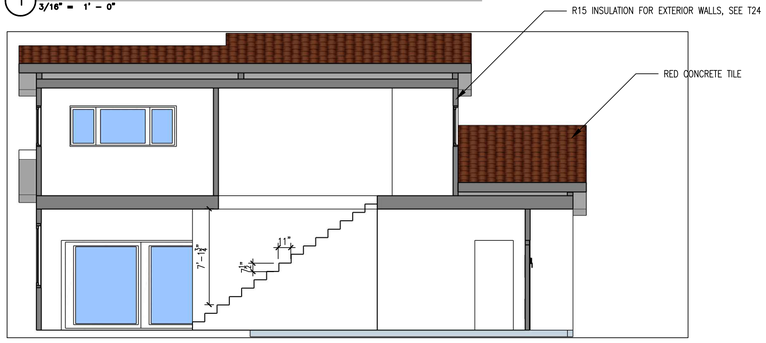

2 ELEVATION
3/16" = 1' - 0"

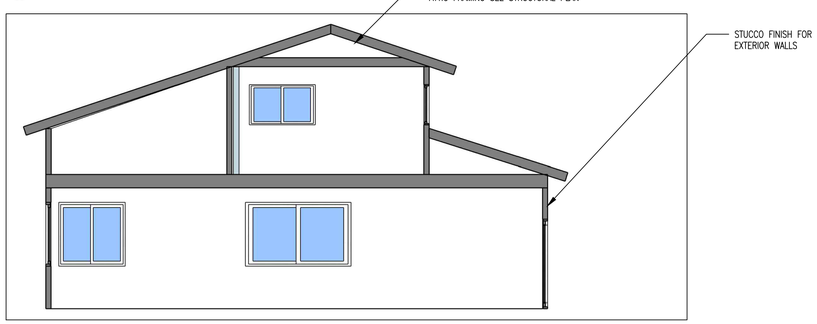

3 ELEVATION
3/16" = 1' - 0"

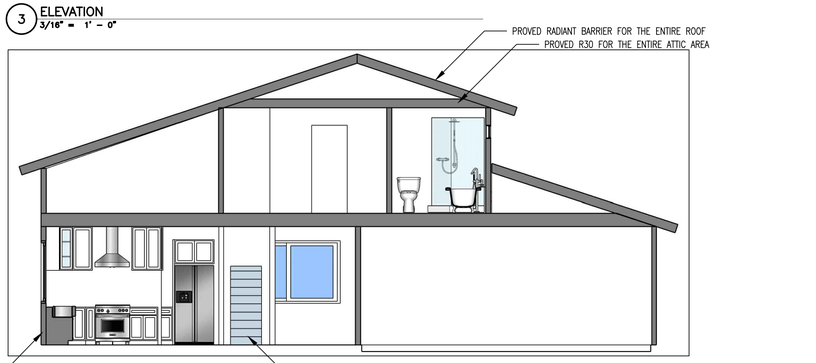

4 ELEVATION
3/16" = 1' - 0"

PROVIDE R19 ON ALL EXTERIOR WALLS

CONSULTANTS

TUNDRA CONSTRUCTION DESIGN & BUILD
15501 CLAYCLIFF CT, HACIENDA HEIGHTS, CA 91745
TEL: 626-679-8335
CONTRACTOR LIC#: 1040237

STRUCTURAL ENGINEER
DAVID LI & ASSOCIATES
1305 N SAN GABRIEL BLVD #101
ROSEMEAD, CA 91770
PHONE NUMBER: 626-288-1216
LIC: 058075

T24
PERFECT DESIGN & INVESTMENT, INC.
2416 W VALLEY BLVD
ALHAMBRA, CA 91803
626-289-8808

DESIGNER SIGNATURE:
HONG LIU

OWNER **HAO DONG ZHANG**
626-217-3511

935 N HILL ROAD POMONA, CA 91768

MARK	DATE	DESCRIPTION

PROJECT NO:	----
CAD DWG FILE:	**739 COLUSA**
DRAWN BY:	**TUNDRA CONSTRUCTION**
CHK'D BY:	**####**
COPYRIGHT:	

SHEET TITLE

SECTION PLAN
AGING IN PLACE DETAIL

A-5

SHEET **SHEET INDEX** OF **TOTAL SHEETS**

GENERAL NOTES:

1. "Code" where referred to herein refers to 2022 CBC.
2. All work shall conform to the requirements of the code.
3. All materials and workmanship shall conform to the drawing and specifications.
4. The contractor shall be responsible for the safety of the building during construction and shall provide adequate shoring, bracing and guide during construction. Safety and bracing requirements shall be in accordance with all National State and Local safety ordinances.
5. The contractor shall be responsible for coordinating the work of all trades and shall check all dimensions.
6. See mechanical, plumbing and electrical drawing for size and location of all openings required for ducts, pipes and for all pipe sleeves, electrical conduits and other items to be embedded in concrete or otherwise incorporated in structural work.
7. In all cases where a conflict may occur, such as between items covered in specifications and notes on the drawings or between general notes and specific details, the Architect shall be notified and he will interpret the intent of the contract documents.
8. Where construction materials are temporarily stored on roof or floor framing, they shall be distributed so that the load does not exceed the design live load.

WOOD FRAMING:

1.1 All Douglas-Fir Larch shall comply with DOC PS20 standards.

1. All horizontal load carrying members and posts to be Douglas Fir Larch north.
   a. 2x grade No. 2 typical U.N.O.
   b. 4x, 6x grade No. 1 typical U.N.O.
   c. post grade NO. 1 typical U.N.O.
2. Studs, plates, sills and blocking to be grade #2 Douglas Fir or better.
3. Sills under stud partitions in contact with Concrete shall pressure treated Douglas Fir bolted to concrete with 5/8" x10" anchor bolts spaced not more than 4'-0" O.C unless noted otherwise, there shall be one bolt within 9" of each end of each sill piece. Minimum of 2 bolts per piece.
4. The bridging shall be provided as per code.
5. A.B into wood framing require 3X3X0.229" plate washers
6. Framing members shall not be notched in any manner except where specifically detailed or approved by the Architect.
7. Minimum nailing for all wood members shall be as per code unless specifically noted.
8. Structural plywood shall be DEPA grade, Structural CDX, thickness as noted on plans with exterior glue conforming to product DOS PS1 or PS2. Each sheet shall be identified by a registered stamp or brand.
9. Edges of all openings through roof or floor shall be nailed per boundary of plywood diaphragm nailing requirements.
10. All wood bearing on concrete or masonry shall be pressure treated Douglas Fir.
11. All wood framing Max. moisture content to be 19%.
12. Joist hangers and other connectors shall be Simpson strong ties or equal.

STRUCTURAL GLUE LAMINATED TIMBER:

1. Materials, manufacture and quality control shall be in conformance with commercial standard, CS-253, "Structural Glued Laminated Timber".
2. Glued laminated beams shall be combination 24F-V8, Douglas Fir and Larch per AITC 117 or combination 24F-V8 with hem fir lamination per AITC.
3. All structural glued laminated timber shall be inspected during lamination by an approved inspection agency. A certificate of inspection shall be provided for the Architect & building department prior to erection.
4. Each glued laminated beam shall be stamped with identification number and shall be accompanied by a Certificate of Inspection.
5. The glued laminated beams shall be furnished by a licensed fabricator specializing in this type of work. The fabricator shall submit complete shop drawings to the Architect for approval prior to fabrication.

Anchorage:

1.Min. Two bolts per piece of sill plate and one located within 12-inch and not less than 7 bolt diameter or 4 inch of each end of each sill plate.
2.Min. of 5/8" diameter A.B. embeded 7 inch into footing and spaced not more than 6' on center for one-story buildings or 4 feet on center two-story buildings.
3. 3"x3"X0.229" plate washer shall be used on each A.B.
4.all anchor bolts and holdowns shall be tied in place prior to foundation inspection.

SHEAR WALL SCHEDULE

	CAPACITY #/L.F.	Structural I plywood or OSB	NAIL	SPACING BOUND	EDGE	INTERM	SILL NAIL	SILL BOLTS	REMARK
7	260	15/32 CDX	8d	4	4	12	16 d @ 3"O.C.	5/8"ø @ 24"O.C.	
8	380	15/32 CDX	8d	3	3	12	3/8"ø x5"L.@10"O.C.	5/8"ø @ 16"O.C.	SEE #2&3
9	490	15/32 CDX	8d	2	2	12	3/8"ø x5"L.@6"O.C.	5/8"ø @ 12"O.C.	SEE #2&3
10	640	15/32 CDX	10d	2	2	12	3/8"ø x5"L.@4"O.C.	5/8"ø @ 8"O.C.	SEE #2&3

7/8" STUCCO OVER PAPER BACK'D LATH WITH 11 GA. FUR NAILS @6" O.C. @T.& B. PLATE EDGE & FIELD (16 dSILL NAIL @ 6" O.C.) CBC TABLE 2306.4.5

1. Hold-down hardware secured in place prior to calling inspector.
2. Shear panels and diaphragms, including nailing, bolting, anchoring and other fastening to other components of the seismic force-resisting system, where the fastener spacing of the sheathing is < 4" o.c. req'd deputy inspection
3. Sill PL.& studs @ edge of plywood for shear walls with lateral loads greater than 300 pounds/foot require a 3 inch nominal or greater member.
4. All bolt holes shall be drilled a Max. of 1/16" oversized.
5. 1/2" edge distance for plywood boundary nailing.
6. 1/8" gap at all plywood penel edges required.

WIND & EARTHQUAKE DESIGN DATA:

1. BASIC WIND SPEED=110 MPH
2. WIND IMPORTANCE FACTOR I=1.0, RISK CATEGORY II
3. WIND EXPOSURE=C
4. ROOF DL=14 PSF, ROOF LL=20 PSF,
4.1FLOOR DL=14 PSF, FLOOR LL=40 PSF,
5. MAPPED SPECTRAL RESPONSE ACCELERATIONS Ss=2.54, S1=0.848
6. SITE CLASS E
7. SPECTRAL RESPONSE COEFFIENTS, Sds=1.693, Sd1=0.848
8. SEISMIC DESIGN CATEGORY D
9. BASIC SEISMIC-FORCE-RESISTING SYSTEM: WOOD SHEAR WALL SYSTEM
10. DESIGN BASE SHEAR: V=Cs*W
11. SEISMIC RESPONSE COEFFIENT: Cs=0.261
12. RESPONSE MODIFICATION FACTOR: R=6.5
13. ANALYSIS PROCEDURE USED: LATERAL DESIGN
14. REDANDUNCY FACTOR Rho=1.3

QUALITY CONTROL PROGRAM
AND DESIGNATION OF
STRUCTURAL OBSERVER

PROJECT ADDRESS:_____ PERMIT APPL. NO.:_____
Description of Work:_____
Owner:_____ Architect:_____ Engineer: DAVID LI

STRUCTURAL OBSERVATION
(ONLY CHECKED ITEMS ARE REQUIRED)

FIRM OR INDIVIDUAL TO BE RESPONSIBLE FOR THE STRUCTURAL OBSERVATION:
NAME:DAVID LI PHONE:(626)288-1216 CALIF. REGISTRATION:C58075

FOUNDATION	WALL	FRAME	DIAPHRAGM
☒ FOOTING, STEM WALLS, PIERS	☐ CONCRETE	☐ STEEL MOMENT FRAME	☐ CONCRETE
☐ MAT FOUNDATION	☐ MASONRY	☐ STEEL BRACED FRAME	☐ STEEL DECK
☐ CAISSON, PILES, GRADE BEAMS	☒ WOOD	☐ CONCRETE MOMENT FRAME	☒ WOOD
☐ STEPP'G/RETAIN'G FOUNDATION, HILLSIDE SPECIAL ANCHORS	☒ OTHERS: SIMPSON STRONG WALL	☐ MASONRY WALL FRAME	☐ OTHERS:
☐ OTHERS:		☐ OTHERS:	

DELARATION BY OWNER(required in any case)
I, the owner of the project, declare under penalty of perjury that the above listed firm or individual is hired by me, and not by others, to be the Structrual Observer.

Signature_____ Date_____

DECLARATION BY ENGINEER OR ARCHITECT OF RECORD(required if different from the listed Structural Observer)
I, the Engineer or Architect of record for the project, declare under penalty of perjury that the above listed firm or individual is designated by me to be responsible for the Structural Observation.

Signature_____ Date_____

FRAMING NOTES:

1. Roof sheathing to be 1/2" CDX plywood or OSB (INDEX 24/0) with 8d common nail at: 6" O.C. in boundry, 12" O.C. in intermediated (field),
2. Floor sheathing to be 5/8" CD T & G plywood or OSB (INDEX 32/16) with 10d common nail at: 6" O.C. in boundry, 10" O.C.in intermediated (field),
3. Wood diaphragm to be inspected and approved by Building Department prior to covering.
4. See detail 5/S-1 for typical wall sheathing detail.
5. See detail 4/S-1 for typical diaphragm detail and notes.
6. See detail on framing plan for shear wall indicated by ◇
7. See shear wall ◇ denote full length and full height of the walls.
8. Structural observation will be performed when required by the Building Official.
9. A certificate of compliance will be provided for the laminated beams.
10. The max. depth of notching shall not exceed 1/6 the depth of the member, and shall not be located in the middle 1/3 of the span. of the span.
11. The max. depth of notching shall not exceed 1/4 the depth at end of spans.
12. Provide solid 2x blocking under partitions perpendicular to floor joist
13. Provide double joist under parallel bearing partitions
14. Roof sheathing requires nailing inspection before covered.
15. Holdown shall be tight before covered plywood sheathing.
16. 2-layer #15 black paper covered plywood sheathing for shear wall.
17. Stucco lath& drywall shall be nailed to all studs & to top & bottom PL.
18. roof plywd shall be bond w/ INT. & EXT. glue & be of EXT. type where exposed to weather.

FOUNDATION NOTES:

1. For floor dimension, curbs, under floor ducts, conduits, etc.
2. Verify all conditions in field.
3. See detail on plan/S-1 for shear wall indicated by ◇
4. See detail 1/S-1 for typical slab on grade, control joints, and slab depression details.
5. Shear walls◇ denote full length and full height of the wall
6. Anchor bolts are 5/8"ø @48"O.C with galvanized plate washer 3"x3"x0.229". Anchor bolts shall be 12" at each end with 7" Min. embeddment@6' o.c TYP.
7. All Holdown hardware, anchor bolts & rebars to be secured in place prior to call for inspection.
8. Saturate the soil 18" deep before placeing the concrete slab.
9. Grading & footing to be inspected & certified by the soil engineer prior to pouring the concrete.
10. Fasteners in preservative treated wood or fire retardant treated wood shall be of hot dipped zinc coated galvanized steel or stainless steel. in accordance w/ASTM A153.

CONCRETE:

1. Cement: Type V conforming to A.S.T.M. C-150 C.B.C.
2. All concrete unless otherwise noted on plans will be regular weight hard rock type (150 1b/cu.ft.). Aggregate shall conform to A.S.T.M. C-33 with proven shrinkage characteristics of less than 0.04% as per A.S.T.M. C-157.
3. Strengths: Ultimate compressive strength at 28 days - F'c=2500 psi., ACI 318-14
4. Maximum slump of concrete used in floor slab at flat work shall be four(4) inches.
5. Vibration: Vibration of concrete shall be in accordance with the general provisions outlined in Portland Cement Association Spec. ST26.
6. Curing: Concrete shall be maintained in a moist condition for a minimum of five days after its placement. Approved curing compounds may be used in lieu of moist curing.
7. Strength tests of concrete shall be required as per code and as outlined in specification reports to be forward to the structural engineer.
8. Anchor bolts, dowels, inserts, etc. shall be securely tied in place prior to foundation inspection.
9. Location of construction and pour joints shall be approved by the Architect pouring concrete.
10. Continuous inspection required for concrete F'c greater than 2500 psi.

SOIL INFO.:

1. The foundation designed is based on the recommendations by CBC 2022 TABLE 1806.2
2. The soil bearing value used for design of footing upon undisturbed soils and 24" below lowest finished grade is: 1500 PSF for spread footings, 1500 PSF for continuous footings.
3. Soil engineer must inspect and approve footing excavation prior to placing rebars and approval to be provided to the building inspector before City approval of foundation.

REINFORCING STEEL:

1. a. All reinforced steel to conform to A.S.T.M. specification A615 Grade 60 unless noted otherwise on plans.
   b. Deformations shall be in accordance with A.S.T.M. A615.
2. Unless otherwise noted, all reinforcing steel shall be lapped 36 bar diameter or 2'-0" minimum whichever governs. All splices shall be located as detailed on plans.
3. certification and testing of reinforcing steel shall be in accordance with the provision of A.S.T.M. standards.
4. All reinforcing steel shall be supported and tied in conformance with the latest edition of "The manual of Reinforcing Steel Practice for Reinforced Concrete Structures".
5. Provide the following minimum protective covering of concrete unless otherwise noted: Deposited against earth 3" clear; In contact with earth (formed) 2" clear

LOS ANGELES REGIONAL UNIFORM CODE PROGRAM
SPECIAL INSPECTION PROGRAM
This form to be attached to the construction plans prior to permit approval

ITEMS (only checked items are required)	DESCRIPTION (only checked items are required)	individuals/Firms*to perform S. I.
☐Concrete	☐ All Concrete ☐All except ☐ Test:__per__c.y.; __@ 7 days, __@ 28 days, __hold.	
☐ Bolts installed in Concrete	U Bolts in existing Concrete/masonry O bolts in shear walls	
☐ Special Moment-Resisting Concrete Frame	☐ Location as indicated EI All concrete frames ☐ ☐ Test:__per__c.y.; __@ 7 days, __@ 28 days, __hold.	
☐ Reinforcing steel and Pre-stressing Tendons	☐ Stressing and grouting of tendons Steel placement: ☐ Periodic Inspection ☐ Continuous Inspection	
☐ Structrual Welding	☐ All Welding Except Periodic: ☐ Single pass fillet welds < 5/16" ☐ Cladding Connection ☐ Welded studs ☐ Cold formed studs ☐ Metal deck ☐ Stairs&Railing ☐ Reinforcing steel NDT: ☐ UT ☐ Rg ☐ MPT ☐ PT ☐	
☐ High-strength Bolting	Snug tight: ☐ All ☐ as indicated ☐ Pretension: ☐ All ☐ as indicated ☐	
☐ Structrual Masonry	☐ Working Stress Design ☐ full- ☐ half-stresses ☐ as indicated ☐ Strength Design ☐ Empirical Design f'm=_____psi TESTING: Before During ☐ Other Remarks Prisms ☐ ☐ Grout ☐ ☐ Mortar ☐ ☐ Units ☐ ☐	
☐ Piling, Drilled piers and Caissons	☐ Inspection by Geotechnical Engineer in addition to S. I. ☐ Load testing Driving ☐ Continuous Inspection ☐ Periodic Inspection Driving ☐ Continuous Inspection ☐ Periodic Inspection	
☐ Shotcrete	☐ Pre-construction panel testing ☐ In-place cores testing	
☒ Others	☒ Epoxy holdown and anchorage system (periodic). ☒ SW AND SSW Wall (periodic).	

STUDS	MAX. UNSUPPORTED HEIGHT* BEAR'G WALL	NON BAR'G WALL
2 X 4 @ 16"	10'-0"	14'-0"
2 X 6 @ 16"	14'-0"	20'-0"
2 X 8 @ 16"	18'-0"	24'-0"

* MAX. DISTANCE BETWEEN FLOOR & ROOF.

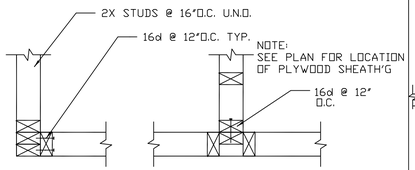

WOOD STUD SCHEDULE 3

NAILING SCHEDULE (CBC 2022 TABLE 2304.10.1)

	or hip rafters; or roof rafter to 2" ridge beam	3-10d box 3-3"x0.131" nails 3-3" 14 gage staples, 7/16" crown	
		3-10d common 3-16d box 4-10d box 4-3"x0.131" nails 4-3" 14 gage staples,7/16" crown	Toenail
		WALL	
8.	Stud to Stud (not at braced wall panels)	16d common	24" o.c. face nail
		10 d box 3"x0.131" nails 3" 14 gage staples, 7/16" crown	16" o.c. face nail
9.	Stud to stud and abutting studs at in tersecting wall corners (at braced wall panels)	16d common	16" o.c. face nail
		16d box	12" o.c. face nail
		3"x0.131" nails 3" 14 gage staples, 7/16" crown	12" o.c. face nail
10.	Built-up header	16d common	16" o.c. each edge, face nail
		16d box	12" o.c. each edge, face nail
11.	Continuous header to stud	4-8d common 4-10d box	Toenail
12.	Top plate to top plate	16d common	16" o.c. face nail
		10d box 3"x0.131" nails 3" 14 gage staples, 7/16" crown	12" o.c. face nail 3"x0.131" nails
13.	Top plate to top plate, at end joints	8-16d common 12-10d box 12-3"x0.131" nails 12-3" 14 gage staples, 7/16" crown	Each side of end joint, face nail (min 24" lap splice length each side of end joint)
14.	Bottom plate to joist, rim joist, band joist or blocking (not at braced wall panels)	16d common	16" o.c. face nail
		16d box 3"x0.131" nails 3" 14 gage staples, 7/16" crown	12" o.c. face nail
15.	Bottom plate to joist, rim joist, band joist or blocking at braced wall panels	2-16d common 3-16d box 4-3"x0.131" nails 4-3" 14 gage staples, 7/16" crown	16" o.c. face nail
16.	Stud to top or bottom plate	4-8d common 4-10d box 4-3"x0.131" nails 4-3" 14 gage staples, 7/16" crown	Toenail
		2-16d common 3-10d box 3-3"x0.131" nails 3-3" 14 gage staples, 7/16" crown	End nail
17.	Top or bottom plate to stud	2-16d common 3-10d box 3-3"x0.131" nails 3-3" 14 gage staples, 7/16" crown	End nail
18.	Top plates, laps at corners and intersections	2-16d common 3-10d box 3-3"x0.131" nails 3-3" 14 gage staples, 7/16" crown	Face nail
19.	1" brace to each stud and plate	2-8d common 2-10d box 2-3"x0.131" nails 2-3" 14 gage staples, 7/16" crown	Face nail
20.	1"x6" sheathing to each bearing	2-8d common 2-10d box	Face nail
21.	1" 8" and wider sheathing to each bearing	3-8d common 3-10d box	Face nail
		FLOOR	
22.	Joist to sill, top plate, or girder	3-8d common 3-10d box 3-3"x0.131" nails 3-3" 14 gage staples, 7/16" crown	Toenail
23.	Rim joist, band joist, or blocking to top plate, sill or other framing below	8d common 10d box 3"x0.131" nails 3" 14 gage staples, 7/16" crown	6" o.c., toenail
24.	1"x6" subfloor or less to each joist	2-8d common 2-10d box	Face nail
25.	2" subfloor to joist or girder	2-16d common	Face nail
26.	2" plank	2-16d common	Each bearing, face nail
27.	Built up girders and beams, 2" lumber layers	20d common 10d box 3"x0.131" nails 3" 14 gage staples, 7/16" crown And 2-20d common 3-10d box 3-3"x0.131" nails 3-3" 14 gage staples, 7/16" crown	32" o.c. face nail at top and bottom staggered on opposite sides 24" o.c. face nail at top and bottom staggered on opposite sides Ends and at each splice, face nail
28.	Ledger strip supporting joists or rafters	3-16d common 4-10d box 4-3"x0.131" nails 4-3" 14 gage staples, 7/16" crown	Each joist or rafter, face nail
29.	Joist to band joist or rim joist	3-16d common 4-10d box 4-3"x0.131" nails 4-3" 14 gage staples, 7/16" crown	End nail
30.	Bridging or blocking to	2-8d common	Each end, toenail

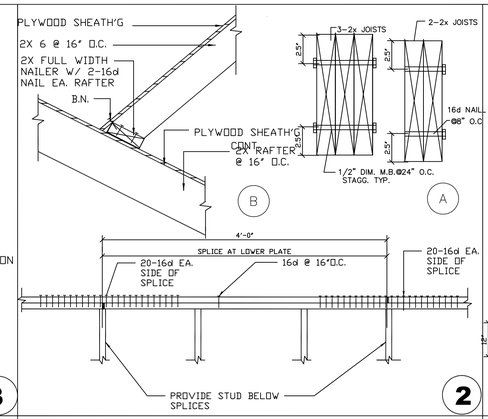

2

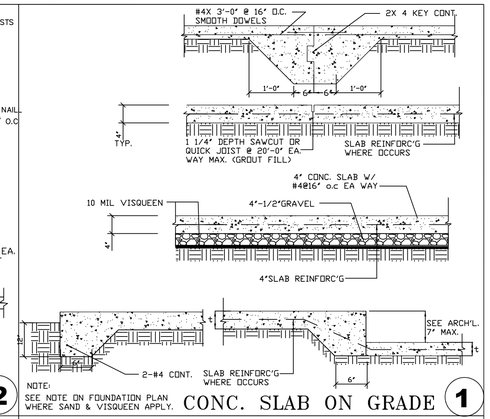

CONC. SLAB ON GRADE 1

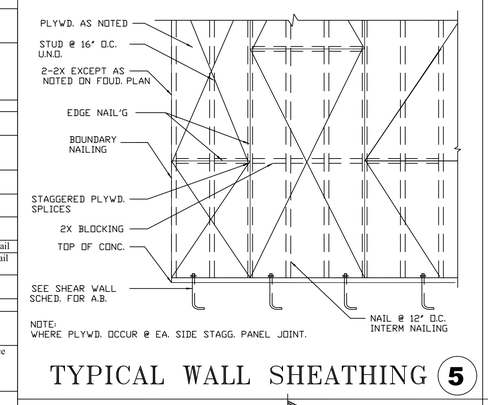

TYPICAL WALL SHEATHING 5

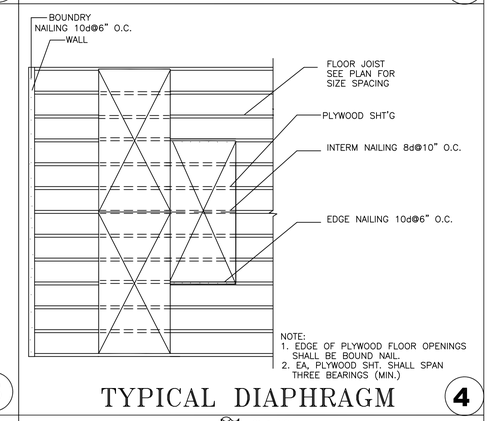

TYPICAL DIAPHRAGM 4

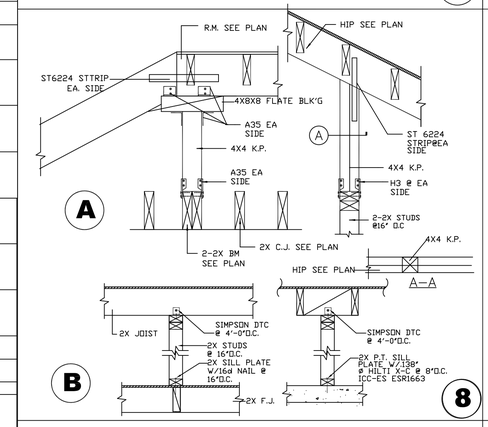

8

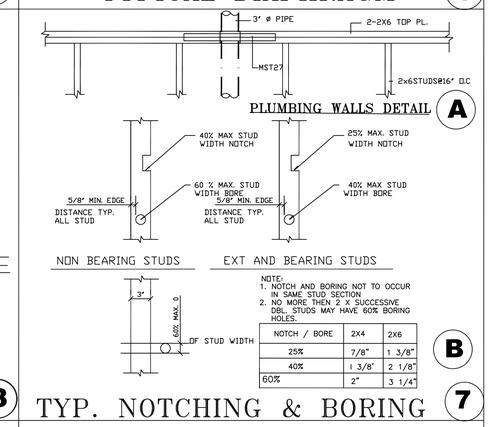

NOTCH / BORE	2X4	2X6
25%	7/8"	1 3/8"
40%	1 3/8"	2 1/8"
60%	2"	3 1/4"

B

TYP. NOTCHING & BORING 7

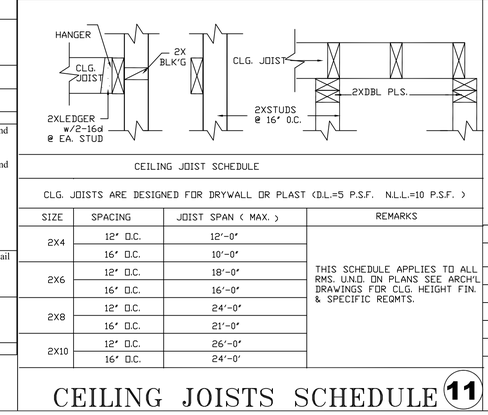

CEILING JOIST SCHEDULE

CLG. JOISTS ARE DESIGNED FOR DRYWALL OR PLAST (D.L.=5 P.S.F. N.L.L.=10 P.S.F.)

SIZE	SPACING	JOIST SPAN (MAX.)	REMARKS
2X4	12" O.C.	12'-0"	THIS SCHEDULE APPLIES TO ALL RMS. U.N.O. ON PLANS SEE ARCH'L DRAWINGS FOR CLG. HEIGHT FIN. & SPECIFIC REQMTS.
	16" O.C.	10'-0"	
2X6	12" O.C.	18'-0"	
	16" O.C.	16'-0"	
2X8	12" O.C.	24'-0"	
	16" O.C.	21'-0"	
2X10	12" O.C.	26'-0"	
	16" O.C.	24'-0"	

CEILING JOISTS SCHEDULE 11

HEADER SCHEDULE

SPAN	ROOF AND CEILING ONLY	FIRST FLOOR W/CEILING & ROOF	
4'-0"	4X4	4X6	
6'-0	4X8	4X10	
8'-0"	4X10	4X12	
10'-0	4X12	4X14	2-2X TRIM
12'-0"	4X14	3 1/2X14 GLU LAM	2-2X TRIM

TYPICAL HEADER 10

DAVID LI & ASSOCIATES
Consulting Engineers
1305 San Gabriel Blvd. #101
Rosemead, Ca 91770
(626) 288-1216
dla-li@outlook.com

REGISTERED PROFESSIONAL ENGINEER DAVID LI No. C058075 CIVIL STATE OF CALIFORNIA 6/25/24

JOB LOCATION:
935 North Hill Road, Pomona, CA

Date
Scale
Drawn
Job:23380

Sheet **S-1** Of Sheet

C:\DATA_SERVER\File on Data_Server\23\3501\23380\ST23380.dwg, 6/9/2025 4:31:15 PM, Adobe PDF pc3

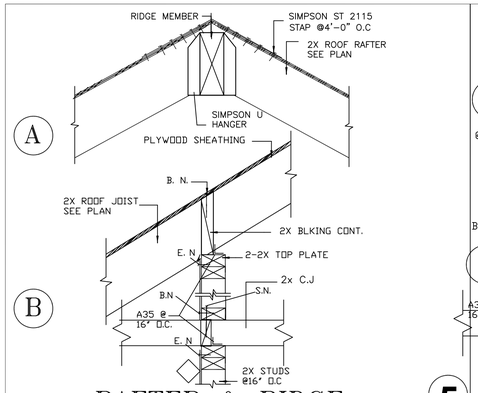

RAFTER & RIDGE **5**

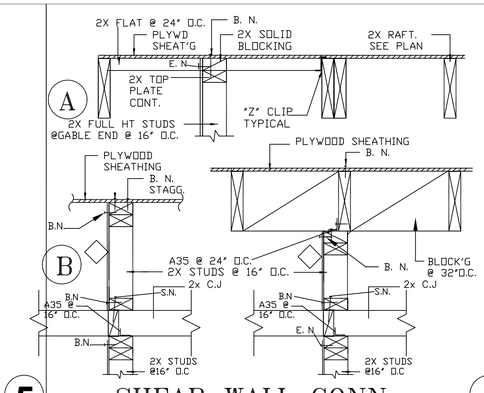

SHEAR WALL CONN. **4**

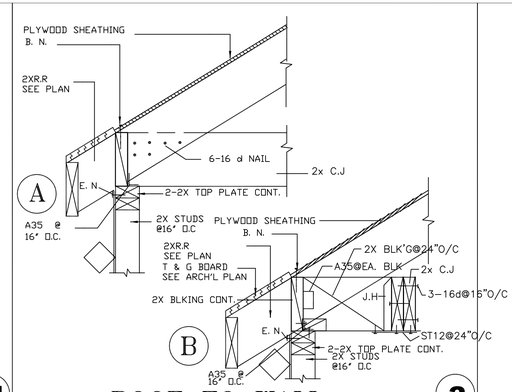

ROOF TO WALL **3**

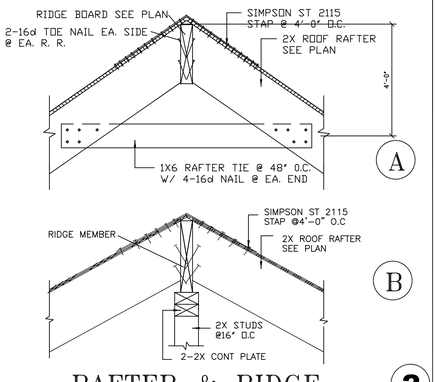

RAFTER & RIDGE **2**

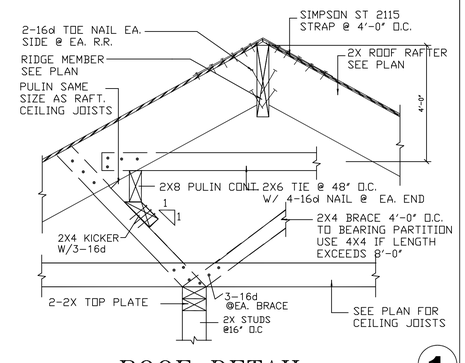

ROOF DETAIL **1**

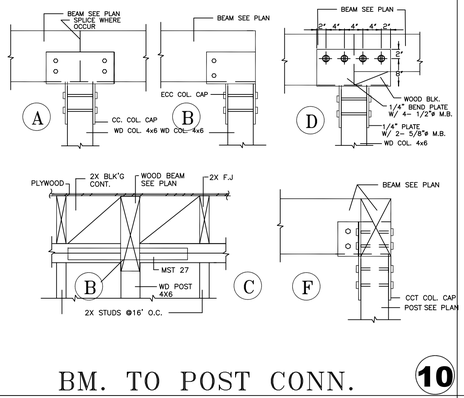

BM. TO POST CONN. **10**

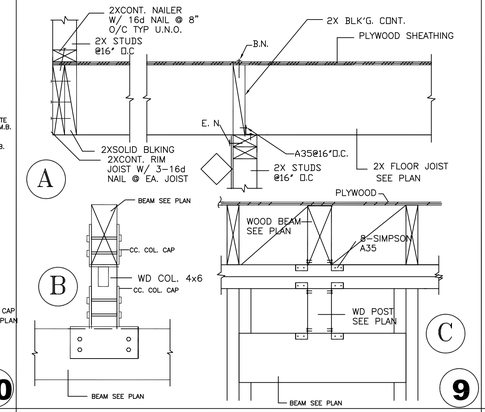

9

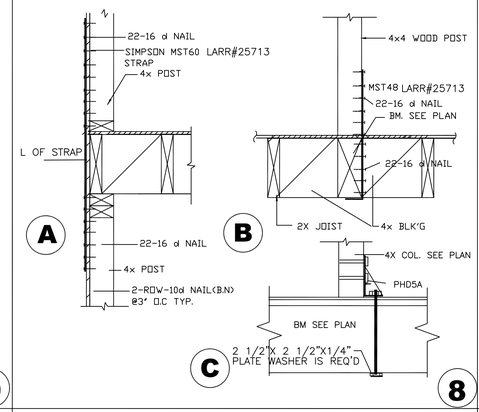

8

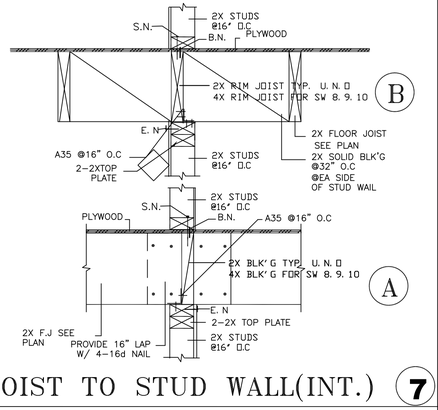

JOIST TO STUD WALL(INT.) **7**

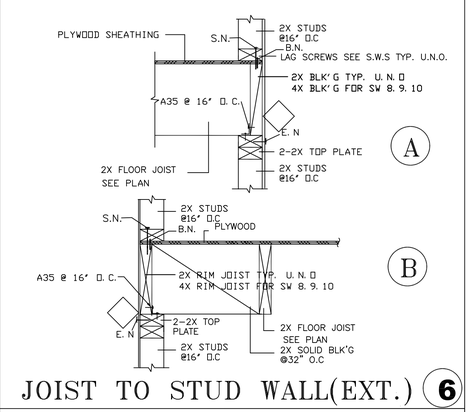

JOIST TO STUD WALL(EXT.) **6**

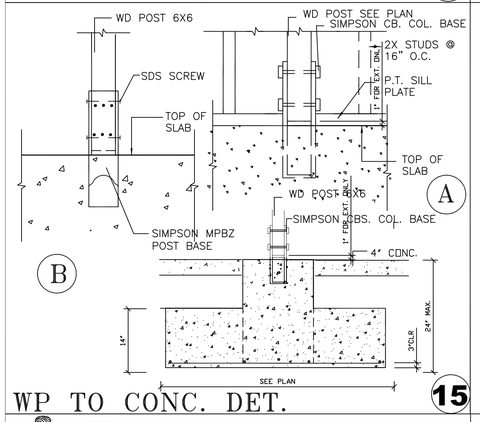

WP TO CONC. DET. **15**

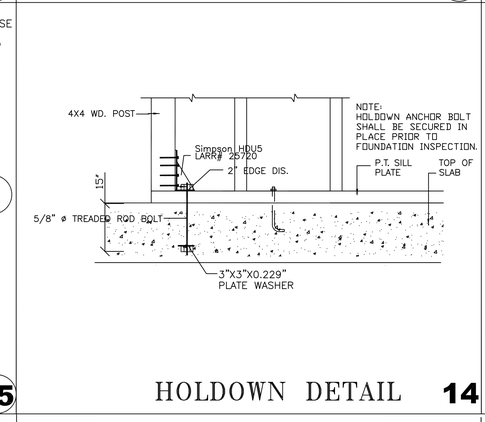

HOLDOWN DETAIL **14**

HOUSE TO GARAGE FTG. **13**

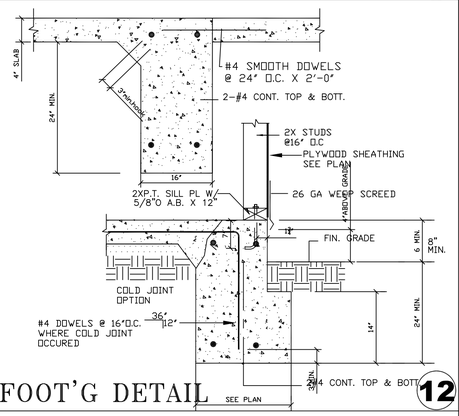

FOOT'G DETAIL **12**

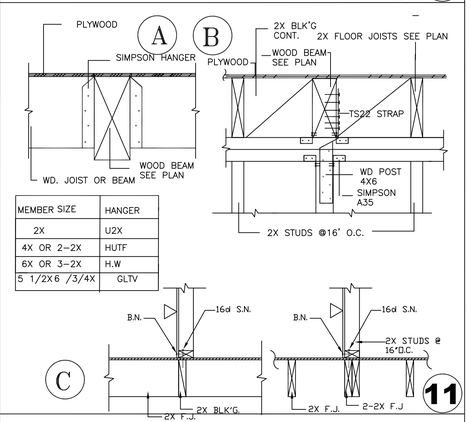

11

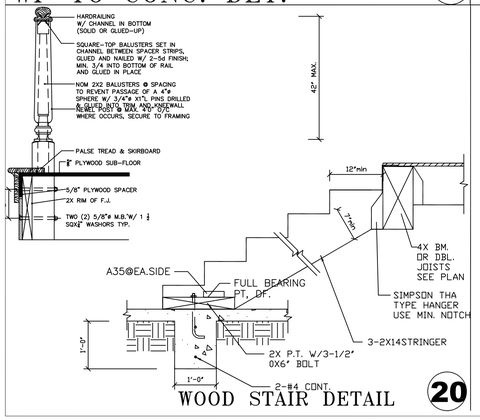
HARDRAILING W/ CHANNEL IN BOTTOM (SOLID OR GLUED-UP)
SQUARE-TOP BALUSTERS SET IN CHANNEL BETWEEN SPACER STRIPS, GLUED AND NAILED W/ 2-5d FINISH; MIN. 3/4 INTO BOTTOM OF RAIL AND GLUED IN PLACE
NOM 2X2 BALUSTERS @ SPACING TO REVENT PASSAGE OF A 4"ø SPHERE W/ 3/4"ø X1"L PINS DRILLED & GLUED INTO TOP AND BOTTOM RAIL
RAIL POST @ MIN. 40" ABOVE NOSING WHERE OCCURS. SECURE TO FRAMING
42" MAX.
PALSE TREAD & SKIRBOARD
¾" PLYWOOD SUB-FLOOR
5/8" PLYWOOD SPACER
2X RIM OF F.J.
TWO (2) 5/8"ø M.B.W/ 1 ½" SQ¼" WASHORS TYP.
12"min
7"MIN
A35@EA.SIDE
FULL BEARING PT. OF
4X BM. OR DBL. JOISTS SEE PLAN
SIMPSON THA TYPE HANGER USE MIN. NOTCH
3-2X14STRINGER
2X P.T. W/3-1/2" 0X6" BOLT
2-#4 CONT.
1'-0"
WOOD STAIR DETAIL **20**

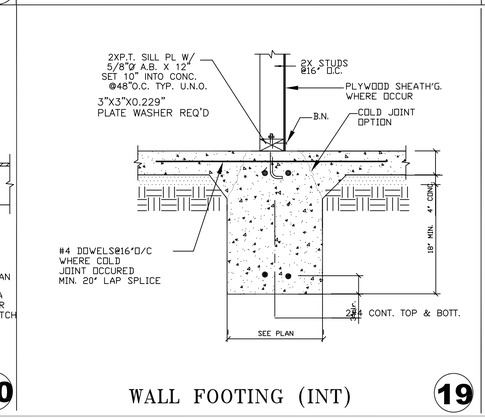

WALL FOOTING (INT) **19**

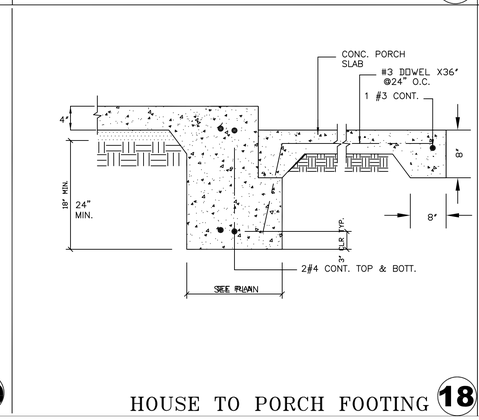

HOUSE TO PORCH FOOTING **18**

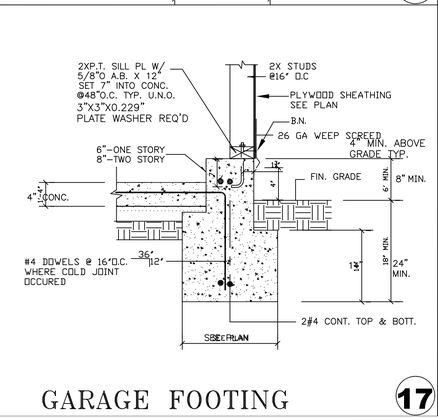

GARAGE FOOTING **17**

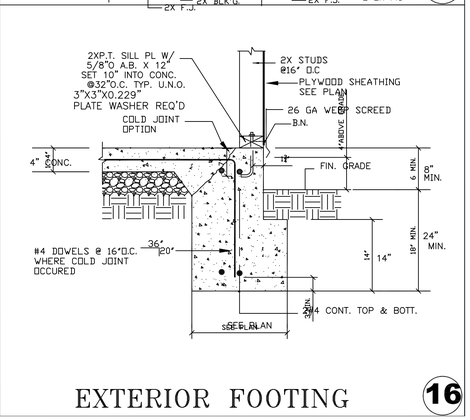

EXTERIOR FOOTING **16**

REVISIONS

DAVID LI & ASSOCIATES
Consulting Engineers
1305 San Gabriel Blvd. #101
Rosemead, Ca 91770
(626) 288-1216
E-Mail dla1997@sbcglobal.net

REGISTERED PROFESSIONAL ENGINEER DAWEN G. DAVID LI No. C058075 CIVIL STATE OF CALIFORNIA

JOB LOCATION: 935 North Hill Road, Pomona, CA

Date

Scale

Drawn

Job 23380

Sheet **S-2** Of Sheet

I:\DATA_SERVER\File on Data_Server\23\2350\23380\ST23380.dwg, 6/9/2025 4:31:00 PM, Adobe PDF.pc3

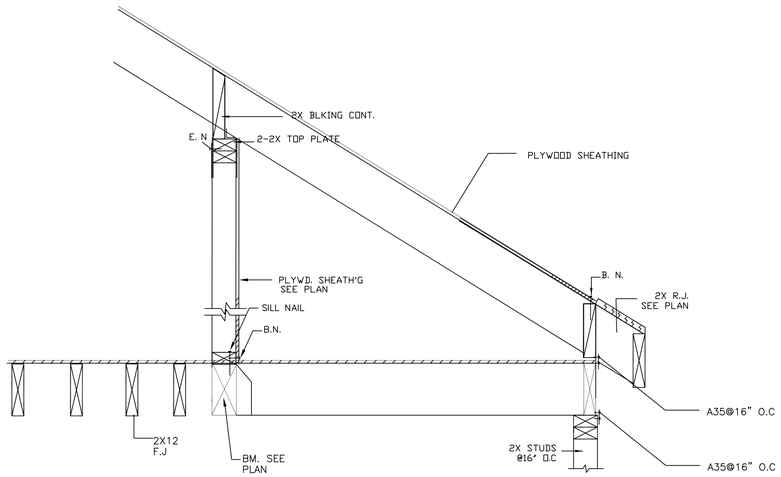

1
—

ROOF PLAN NOTES:

DENOTE ROOF RAFTER TO BE 2x6 AT 16" O.C. TYP. U.O.N.

DENOTE CEILING JOIST TO BE 2x6 AT 16" O.C. TYP. U.O.N.

SEE GENERAL NOTES AND DETAIL ON S-1 FOR ROOF SHEATHING SPECIFICATION AND NAILING

DENOTES WALL BELOW FRAMING

7 X'-Y" DENOTES NEW SHEARWALL AT SECOND FLOOR LEVEL.
X'-Y" DENOTES THE MINIMUM LENGTH OF THE SHEARWALL.
SEE S-1 SHEAR WALL SCHEDULE

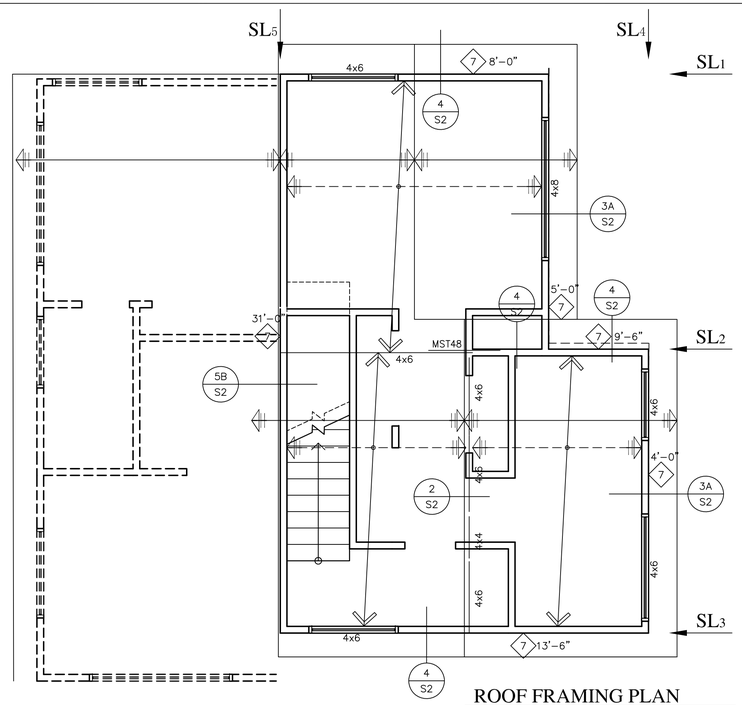

ROOF FRAMING PLAN
1/4"=1'-0"

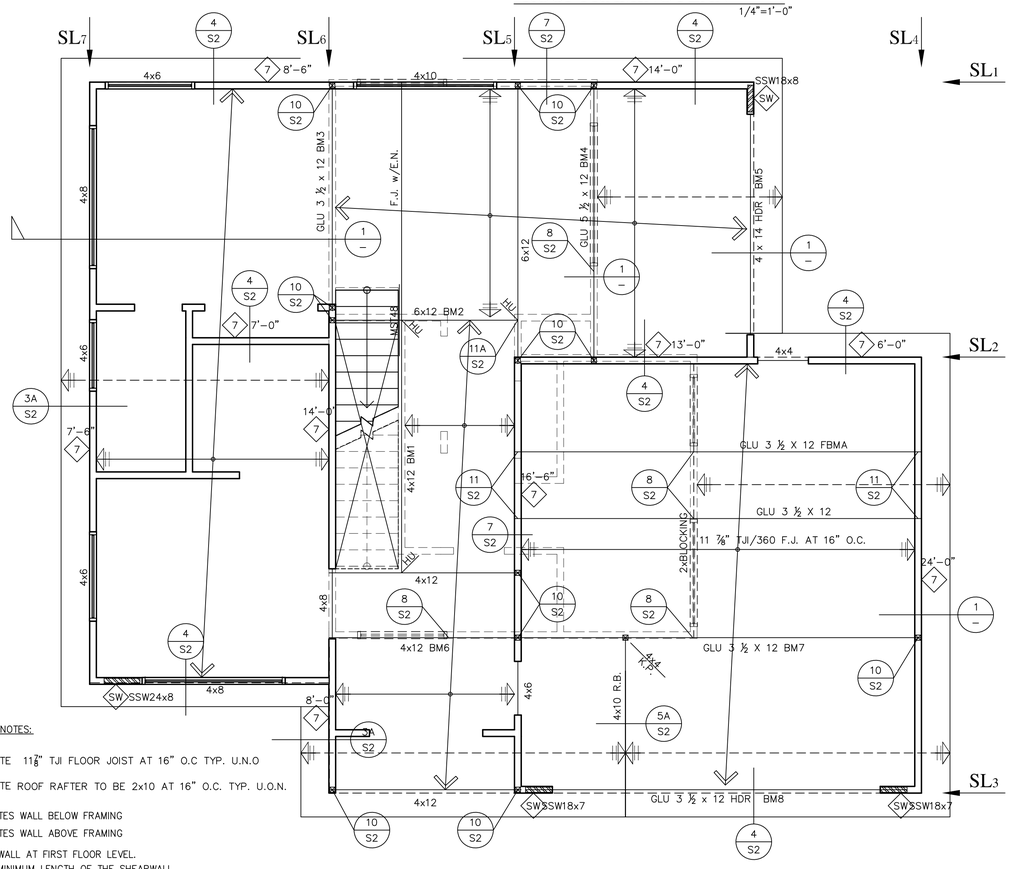

SECOND FLOOR PLAN NOTES:

DENOTE 11⅞" TJI FLOOR JOIST AT 16" O.C TYP. U.N.O

DENOTE ROOF RAFTER TO BE 2x10 AT 16" O.C. TYP. U.O.N.

DENOTES WALL BELOW FRAMING

DENOTES WALL ABOVE FRAMING

DENOTES NEW SHEARWALL AT FIRST FLOOR LEVEL.
X'-Y" DENOTES THE MINIMUM LENGTH OF THE SHEARWALL.
SEE S-1 SHEAR WALL SCHEDULE

SEE GENERAL NOTES AND DETAIL ON S-1 FOR FLOOR SHEATHING SPECIFICATION AND NAILING

2ND FLOOR FRAMING PLAN
1/4"=1'-0"

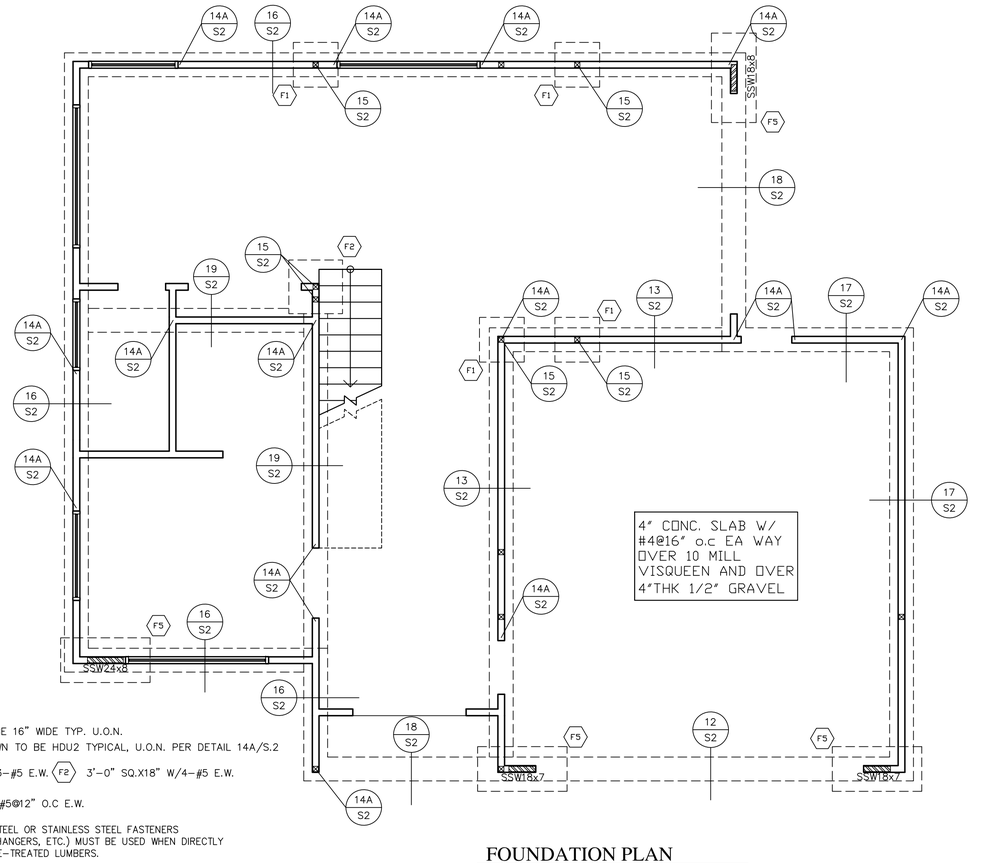

FOUNDATION PLAN NOTES:

ALL CONT. FOOTING TO BE 16" WIDE TYP. U.O.N.
ALL SHEAR WALL HOLDOWN TO BE HDU2 TYPICAL, U.O.N. PER DETAIL 14A/S.2

F1 2'-6" SQ.X18" W/3-#5 E.W. F2 3'-0" SQ.X18" W/4-#5 E.W.

F5 48"X5'-0"X24" W/#5@12" O.C E.W.

HOT-DIPPED GALVANIZED STEEL OR STAINLESS STEEL FASTENERS (i.e., NAILS, SCREWS, A.B. HANGERS, ETC.) MUST BE USED WHEN DIRECTLY IN CONTACT WITH PRESSURE-TREATED LUMBERS.

FOUNDATION PLAN
1/4"=1'-0"

DAVID LI & ASSOCIATES
Consulting Engineers
1305 San Gabriel Blvd. #101
Rosemead, Ca 91770
(626) 288-1216
dla-li@outlook.com

REGISTERED PROFESSIONAL ENGINEER
DI ZHENG DAVID LI
No. C058075
STATE OF CALIFORNIA
CIVIL

JOB LOCATION:
935 North Hill Road, Pomona, CA

Date	
Scale	
Drawn	
Job	23380
Sheet	**S-3**
Of	Sheet

Z:\23\350\23380\ST23380.dwg, 2/4/2026 4:46:32 PM

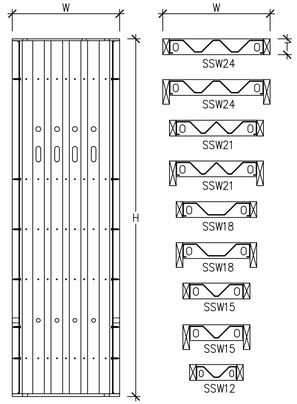

WALL PROFILES

STEEL STRONG-WALL MODELS					
STD. WALL MODEL NO.	-STK WALL MODEL NO.	H(in)	T(in)	HOLDOWN ANCHOR BOLTS[2]	QTY.OF TOP OF WALL SCREWS[1]
SSW12x7	--	80	3½	2-¾"	4
SSW15x7	--	80	3½	2-1"	6
SSW18x7	--	80	3½	2-1"	9
SSW21x7	--	80	3½	2-1"	12
SSW24x7	--	80	3½	2-1"	14
SSW12x7.4	--	85½	3½	2-¾"	4
SSW15x7.4	--	85½	3½	2-1"	6
SSW18x7.4	--	85½	3½	2-1"	9
SSW21x7.4	--	85½	3½	2-1"	12
SSW24x7.4	--	85½	3½	2-1"	14
SSW12x8	--	93¾	3½	2-¾"	4
SSW15x8	SSW15x8-STK	93¾	3½	2-1"	6
SSW18x8	SSW18x8-STK	93¾	3½	2-1"	9
SSW21x8	SSW21x8-STK	93¾	3½	2-1"	12
SSW24x8	SSW24x8-STK	93¾	3½	2-1"	14
SSW12x9	--	105¾	3½	2-¾"	4
SSW15x9	SSW15x9-STK	105¾	3½	2-1"	6
SSW18x9	SSW18x9-STK	105¾	3½	2-1"	9
SSW21x9	SSW21x9-STK	105¾	3½	2-1"	12
SSW24x9	SSW24x9-STK	105¾	3½	2-1"	14
SSW12x10	--	117¾	3½	2-¾"	4
SSW15x10	SSW15x10-STK	117¾	3½	2-1"	6
SSW18x10	SSW18x10-STK	117¾	3½	2-1"	9
SSW21x10	SSW21x10-STK	117¾	3½	2-1"	12
SSW24x10	SSW24x10-STK	117¾	3½	2-1"	14
SSW15x11	SSW15x11-STK	129¾	5½	2-1"	6
SSW18x11	SSW18x11-STK	129¾	5½	2-1"	9
SSW21x11	SSW21x11-STK	129¾	5½	2-1"	12
SSW24x11	SSW24x11-STK	129¾	5½	2-1"	14
SSW15x12	SSW15x12-STK	141¾	5½	2-1"	6
SSW18x12	SSW18x12-STK	141¾	5½	2-1"	9
SSW21x12	SSW21x12-STK	141¾	5½	2-1"	12
SSW24x12	SSW24x12-STK	141¾	5½	2-1"	14
SSW18x13	SSW18x13-STK	153¾	5½	2-1"	9
SSW21x13	SSW21x13-STK	153¾	5½	2-1"	12
SSW24x13	SSW24x13-STK	153¾	5½	2-1"	14

TABLE NOTES :
1. SDS ¼"x3½" SCREWS PROVIDED WITH WALL.
2. SEE SHEET SSW1 FOR ANCHORAGE SOLUTIONS.

STEEL STRONG-WALL MODELS | 1

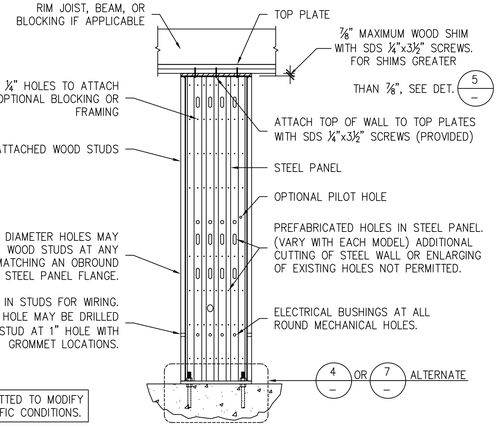

DESIGNER IS PERMITTED TO MODIFY DETAILS FOR SPECIFIC CONDITIONS.

SINGLE-STORY SSW ON CONCRETE | 2

GARAGE HEADER ROUGH OPENING HEIGHT

MODEL NO.	H CURB	ROUGH OPENING HEIGHT
SSW12X7 SSW15X7 SSW18X7 SSW21X7 SSW24X7	5½"	7'-1½"
	6"	7'-2"
SSW12X7 SSW15X7 SSW18X7 SSW21X7 SSW24X7	5½"	8'-2¾"
	6"	8'-3¼"

1. THE HEIGHT OF THE GARAGE CURB ABOVE THE GARAGE SLAB IS CRITICAL FOR THE ROUGH HEADER OPENING AT GARAGE RETURN WALLS.
2. SHIMS ARE NOT PROVIDED WITH STEEL STRONG-WALL.
3. FURRING ON UNDERSIDE OF GARAGE HEADER MAY BE NECESSARY FOR LESSER ROUGH OPENING HEIGHTS.

DESIGNER IS PERMITTED TO MODIFY DETAILS FOR SPECIFIC CONDITIONS.

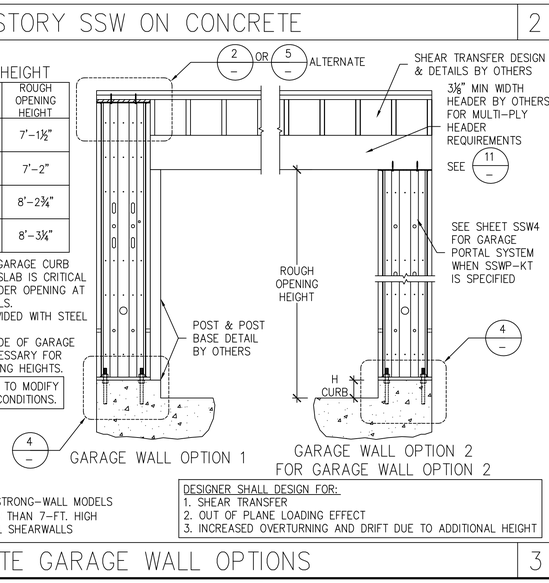

NOTE:
7-FT. HIGH STEEL STRONG-WALL MODELS ARE 80", 2" TALLER THAN 7-FT. HIGH WOOD STRONG-WALL SHEARWALLS

DESIGNER SHALL DESIGN FOR:
1. SHEAR TRANSFER
2. OUT OF PLANE LOADING EFFECT
3. INCREASED OVERTURNING AND DRIFT DUE TO ADDITIONAL HEIGHT

ALTERNATE GARAGE WALL OPTIONS | 3

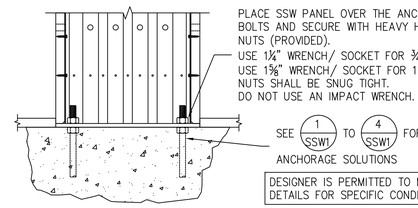

DESIGNER IS PERMITTED TO MODIFY DETAILS FOR SPECIFIC CONDITIONS.

STRONG-WALL ON CONCRETE | 4

DESIGNER IS PERMITTED TO MODIFY DETAILS FOR SPECIFIC CONDITIONS.

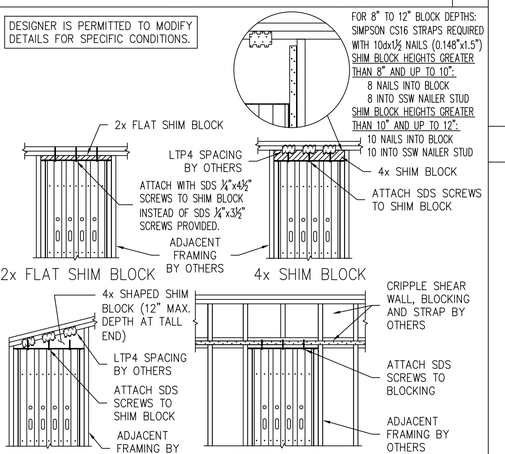

DESIGNER SHALL DESIGN FOR:
1. SHEAR TRANSFER
2. OUT OF PLANE LOADING EFFECT
3. INCREASED OVERTURNING AND DRIFT DUE TO ADDITIONAL HEIGHT

TOP OF WALL HEIGHT ADJUSTMENTS | 5

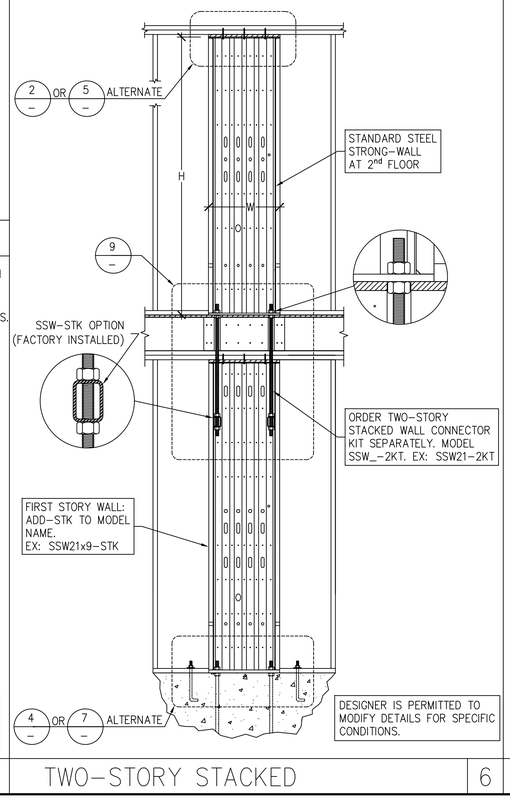

DESIGNER IS PERMITTED TO MODIFY DETAILS FOR SPECIFIC CONDITIONS.

TWO-STORY STACKED | 6

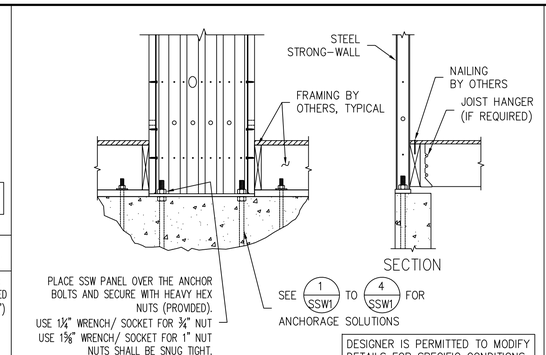

DESIGNER IS PERMITTED TO MODIFY DETAILS FOR SPECIFIC CONDITIONS.

ALTERNATE 1ST FLOOR WOOD FRAMING | 7

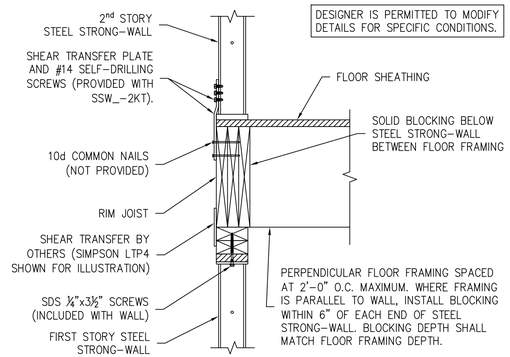

DESIGNER IS PERMITTED TO MODIFY DETAILS FOR SPECIFIC CONDITIONS.

TWO-STORY STACKED FLOOR SECTION | 8

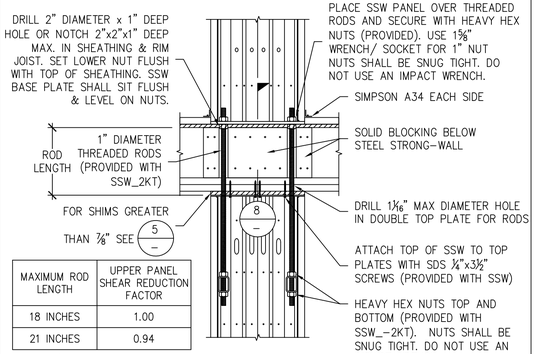

MAXIMUM ROD LENGTH	UPPER PANEL SHEAR REDUCTION FACTOR
18 INCHES	1.00
21 INCHES	0.94

ROD LENGTH IS TOTAL OF FLOOR JOIST DEPTH PLUS TOP PLATES PLUS SHIM THICKNESS.

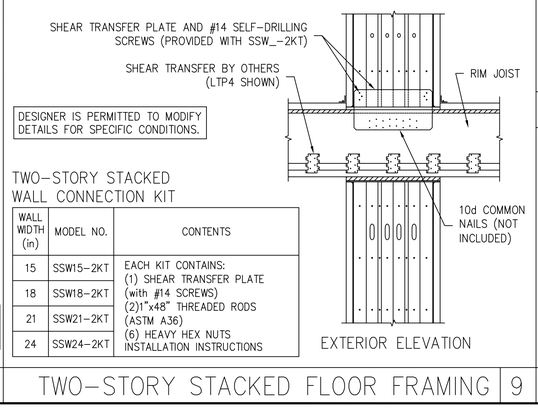

DESIGNER IS PERMITTED TO MODIFY DETAILS FOR SPECIFIC CONDITIONS.

TWO-STORY STACKED WALL CONNECTION KIT

WALL WIDTH (in)	MODEL NO.	CONTENTS
15	SSW15-2KT	EACH KIT CONTAINS: (1) SHEAR TRANSFER PLATE (with #14 SCREWS) (2)1"x48" THREADED RODS (ASTM A36) (6) HEAVY HEX NUTS INSTALLATION INSTRUCTIONS
18	SSW18-2KT	
21	SSW21-2KT	
24	SSW24-2KT	

TWO-STORY STACKED FLOOR FRAMING | 9

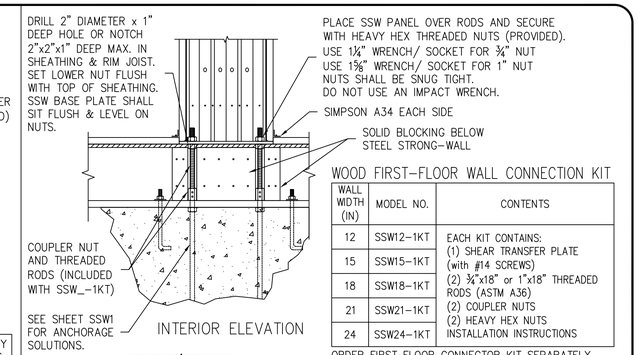

WALL WIDTH (IN)	MODEL NO.	CONTENTS
12	SSW12-1KT	EACH KIT CONTAINS: (1) SHEAR TRANSFER PLATE (with #14 SCREWS) (2) ¾"x18" or 1"x18" THREADED RODS (ASTM A36) (2) COUPLER NUTS (2) HEAVY HEX NUTS INSTALLATION INSTRUCTIONS
15	SSW15-1KT	
18	SSW18-1KT	
21	SSW21-1KT	
24	SSW24-1KT	

ORDER FIRST FLOOR CONNECTOR KIT SEPARATELY. MODEL SSW_-1KT. EXAMPLE: SSW21-1KT

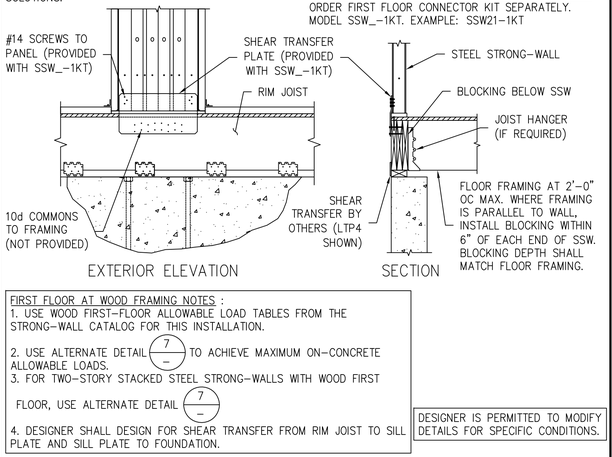

FIRST FLOOR AT WOOD FRAMING NOTES :
1. USE WOOD FIRST-FLOOR ALLOWABLE LOAD TABLES FROM THE STRONG-WALL CATALOG FOR THIS INSTALLATION.
2. USE ALTERNATE DETAIL 7/— TO ACHIEVE MAXIMUM ON-CONCRETE ALLOWABLE LOADS.
3. FOR TWO-STORY STACKED STEEL STRONG-WALLS WITH WOOD FIRST FLOOR, USE ALTERNATE DETAIL 7/—
4. DESIGNER SHALL DESIGN FOR SHEAR TRANSFER FROM RIM JOIST TO SILL PLATE AND SILL PLATE TO FOUNDATION.

DESIGNER IS PERMITTED TO MODIFY DETAILS FOR SPECIFIC CONDITIONS.

FIRST FLOOR AT WOOD FRAMING | 10

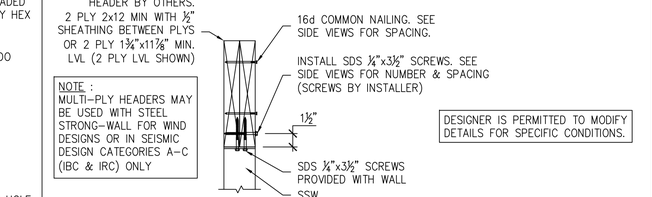

NOTE :
MULTI-PLY HEADERS MAY BE USED WITH STEEL STRONG-WALL FOR WIND DESIGNS OR IN SEISMIC DESIGN CATEGORIES A-C (IBC & IRC) ONLY

DESIGNER IS PERMITTED TO MODIFY DETAILS FOR SPECIFIC CONDITIONS.

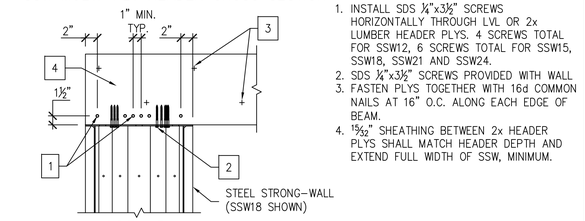

1. INSTALL SDS ¼"x3½" SCREWS HORIZONTALLY THROUGH LVL OR 2x LUMBER HEADER PLYS. 4 SCREWS TOTAL FOR SSW12, 6 SCREWS TOTAL FOR SSW15, SSW18, SSW21 AND SSW24.
2. SDS ¼"x3½" SCREWS PROVIDED WITH WALL
3. FASTEN PLYS TOGETHER WITH 16d COMMON NAILS AT 16" O.C. ALONG EACH EDGE OF BEAM.
4. 1⅝" SHEATHING BETWEEN 2x HEADER PLYS SHALL MATCH HEADER DEPTH AND EXTEND FULL WIDTH OF SSW, MINIMUM.

MULTI-PLY HEADERS | 11

1. STEEL STRONG-WALL SHEARWALL IS MANUFACTURED AND TRADEMARKED BY "SIMPSON STRONG-TIE COMPANY, INC." HOME OFFICE: 5956 W. LAS POSITAS BLVD., PLEASANTON, CA 94588 TEL: (800) 999-5099, FAX: (925) 847-1597. "SIMPSON STRONG-TIE COMPANY, INC." IS AN ISO 9001 REGISTERED COMPANY.
2. USE OF THIS PRODUCT IS SUBJECT TO THE APPROVAL OF THE LOCAL BUILDING DEPARTMENT.
3. THIS PRODUCT IS PART OF THE OVERALL LATERAL FORCE RESISTING SYSTEM OF THE STRUCTURE. DESIGN OF THE BUILDING'S LATERAL FORCE RESISTING SYSTEM, INCLUDING THE LOAD PATH TO TRANSFER LATERAL FORCES FROM THE STRUCTURE TO THE GROUND, IS THE RESPONSIBILITY OF THE SPECIFIER.
4. ENGINEER OF RECORD IS PERMITTED TO MODIFY DETAILS FOR SPECIFIC CONDITIONS.
5. THE CONTRACTOR SHALL VERIFY ALL DIMENSIONS, CONDITIONS, ELEVATIONS, ETC. PRIOR TO INSTALLATION OF ANY COMPONENTS FOR THE STEEL STRONG-WALL SYSTEM. IF ANY DISCREPANCIES ARE FOUND, THEY SHALL BE BROUGHT TO THE ATTENTION OF THE SPECIFIER FOR CLARIFICATION PRIOR TO CONSTRUCTION.
6. INSTALLATION OF PRODUCT SHALL BE DONE IN CONFORMANCE TO THESE DRAWINGS. THE PERFORMANCE OF MODIFIED PRODUCTS OR ALTERED INSTALLATION PROCEDURES ARE THE SOLE RESPONSIBILITY OF THE SPECIFIER.
7. SIMPSON STRONG-TIE COMPANY, INC. RESERVES THE RIGHT TO CHANGE SPECIFICATIONS, DESIGNS, AND MODELS WITHOUT NOTICE OR LIABILITY FOR SUCH CHANGES.
8. ALL HARDWARE CALLED OUT IS SIMPSON STRONG-TIE.

NOTES | 12

NO.	DATE	REVISIONS
1	09-21-2009	2006 IBC REVISIONS
2	04-16-2014	2012 IBC REVISIONS
3	08-08-2016	2015 IBC REVISIONS
4	06-16-2020	2018 IBC REVISIONS
5	03-16-2021	2021 IBC REVISIONS

REGISTERED PROFESSIONAL ENGINEER JIACHENG DAVID LI No. C058075 CIVIL STATE OF CALIFORNIA

SIMPSON Strong-Tie, Co. Inc.
• 5956 W. Las Positas Blvd
Pleasanton, CA 94588
• Tel: (800) 999-5099
• Website: www.strongtie.com

© 2021 Simpson Strong-Tie Company Inc.
THERE IS NO EQUAL

STEEL STRONG-WALL
FRAMING DETAILS
ENGINEERED DESIGNS

NAME	
DATE	03-16-2021
SCALE	N.T.S.
CHECKED	
SHEET	SSW1
	OF SHEETS
JOB NO.	

\DATA SERVER\File on Data Server\22\SSW2.dwg, 2/18/2022 5:57:40 PM

GENERAL INFORMATION

01	Project Name	SINGLE HOUSE			
02	Run Title	Title 24 Analysis			
03	Project Location	935 N. HILL ROAD			
04	City	POMONA	05	Standards Version	2022
06	Zip code	91768	07	Software Version	EnergyPro 9.4
08	Climate Zone	9	09	Front Orientation (deg/ Cardinal)	135
10	Building Type	Single family	11	Number of Dwelling Units	1
12	Project Scope	Newly Constructed	13	Number of Bedrooms	1
14	Addition Cond. Floor Area (ft^2)	0	15	Number of Stories	2
16	Existing Cond. Floor Area (ft^2)	n/a	17	Fenestration Average U-factor	0.3
18	Total Cond. Floor Area (ft^2)	1528	19	Glazing Percentage (%)	18.15%
20	ADU Bedroom Count	n/a	21	ADU Conditioned Floor Area	n/a
22	Fuel Type	Natural gas	23	No Dwelling Unit:	No

COMPLIANCE RESULTS

01	Building Complies with Computer Performance
02	This building incorporates features that require field testing and/or verification by a certified HERS rater under the supervision of a CEC-approved HERS provider.
03	This building incorporates one or more Special Features shown below

ENERGY DESIGN RATINGS

	Energy Design Ratings			Compliance Margins		
	Source Energy (EDR1)	Efficiency[1] EDR (EDR2efficiency)	Total[2] EDR (EDR2total)	Source Energy (EDR1)	Efficiency[1] EDR (EDR2efficiency)	Total[2] EDR (EDR2total)
Standard Design	33.4	37.4	26.1			
Proposed Design	30.7	35	24.8	2.7	2.4	1.3

RESULT[3]: PASS

[1]Efficiency EDR includes improvements like a better building envelope and more efficient equipment
[3]Building complies when source energy, efficiency and total compliance margins are greater than or equal to zero and unmet load hour limits are not exceeded

- Standard Design PV Capacity: 1.90 kWdc
- PV System resized to 1.90 kWdc (a factor of 1.897) to achieve 'Standard Design PV' PV scaling

ENERGY USE SUMMARY

Energy Use	Standard Design Source Energy (EDR1) (kBtu/ft^2 -yr)	Standard Design TDV Energy (EDR2) (kTDV/ft^2 -yr)	Proposed Design Source Energy (EDR1) (kBtu/ft^2 -yr)	Proposed Design TDV Energy (EDR2) (kTDV/ft^2 -yr)	Margin (EDR1)	Margin (EDR2)
Space Heating	1.74	7.86	1.55	11.19	0.19	-3.33
Space Cooling	0.72	20.46	0.51	17.31	0.21	3.15
IAQ Ventilation	0.3	3.14	0.3	3.14	0	0
Water Heating	1.21	12.47	0.9	9.46	0.31	3.01
Self Utilization/Flexibility Credit			0	0	0	0
Efficiency Compliance Total	**3.97**	**43.93**	**3.26**	**41.1**	**0.71**	**2.83**
Photovoltaics	-1.4	-40.78	-1.4	-40.69		
Battery			0	0		
Flexibility			0			
Indoor Lighting	0.75	7.09	0.75	7.09		
Appl. & Cooking	3.09	20.18	3.08	20.09		
Plug Loads	2.36	24.03	2.36	24.03		
Outdoor Lighting	0.19	1.67	0.19	1.67		
TOTAL COMPLIANCE	**8.96**	**56.12**	**8.24**	**53.29**		

ENERGY USE INTENSITY

	Standard Design (kBtu/ft^2 - yr)	Proposed Design (kBtu/ft^2 - yr)	Margin (kBtu/ft^2 - yr)	Margin Percentage
Gross EUI[1]	13.11	11.73	1.38	10.53
Net EUI[2]	5.88	4.5	1.38	23.47

Notes
1. Gross EUI is Energy Use Total (not including PV) / Total Building Area.
2. Net EUI is Energy Use Total (including PV) / Total Building Area.

REQUIRED PV SYSTEMS

01	02	03	04	05	06	07	08	09	10	11	12
DC System Size (kWdc)	Exception	Module Type	Array Type	Power Electronics	CFI	Azimuth (deg)	Tilt Input	Array Angle (deg)	Tilt: (x in 12)	Inverter Eff. (%)	Annual Solar Access (%)
1.9	NA	Standard (14-17%)	Fixed	none	true	150-270	n/a	n/a	<=7:12	96	98

REQUIRED SPECIAL FEATURES

The following are features that must be installed as condition for meeting the modeled energy performance for this computer analysis.

- Insulation below roof deck
- Northwest Energy Efficiency Alliance (NEEA) rated heat pump water heater; specific brand/model, or equivalent, must be installed
- One or more heat pump water heaters have been modeled as demand response compatible

HERS FEATURE SUMMARY

The following is a summary of the features that must be field-verified by a certified HERS Rater as a condition for meeting the modeled energy performance for this computer analysis. Additional detail is provided in the building tables below. Registered CF2Rs and CF3Rs are required to be completed in the HERS Registry

- Quality insulation installation (QII)
- Indoor air quality ventilation
- Kitchen range hood
- Minimum AirFlow
- Verified EER/EER2
- Verified SEER/SEER2
- Verified Refrigerant Charge
- Fan Efficacy Watts/CFM
- Verified HSPF
- Verified heat pump rated heating capacity
- Duct leakage testing
- Verified Duct Design

BUILDING - FEATURES INFORMATION

01	02	03	04	05	06	07
Project Name	Conditioned Floor Area (ft^2)	Number of Dwelling Units	Number of Bedrooms	Number of Zones	Number of Ventilation Cooling Systems	Number of Water Heating Systems
SINGLE HOUSE	1528	1	1	2	0	1

ZONE INFORMATION

01	02	03	04	05	06	07
Zone Name	Zone Type	HVAC System Name	Zone Floor Area (ft^2)	Avg. Ceiling Height	Water Heating System 1	Status
1ST FLOOR PLAN	Conditioned	WHOLE HOUSE1	1033	8	DHW Sys 1	New
2ND FLOOR PLAN	Conditioned	WHOLE HOUSE1	495	8	DHW Sys 1	New

OPAQUE SURFACES

01	02	03	04	05	06	07	08
Name	Zone	Construction	Azimuth	Orientation	Gross Area (ft^2)	Window and Door Area (ft2)	Tilt (deg)
NORTHWEST WALL	1ST FLOOR PLAN	R-19 Wall	315	Back	296.8	45.5	90

OPAQUE SURFACES

01	02	03	04	05	06	07	08
Name	Zone	Construction	Azimuth	Orientation	Gross Area (ft^2)	Window and Door Area (ft2)	Tilt (deg)
SOUTHEAST WALL	1ST FLOOR PLAN	R-19 Wall	135	Front	296.8	28	90
SOUTHWEST WALL	1ST FLOOR PLAN	R-19 Wall	225	Left	292	50.7	90
NORTHEAST WALL	1ST FLOOR PLAN	R-19 Wall	45	Right	292	84	90
NORTHWEST WALL 2	2ND FLOOR PLAN	R-19 Wall	315	Back	164.8	17.5	90
SOUTHEAST WALL 2	2ND FLOOR PLAN	R-19 Wall	135	Front	164.8	15.5	90
SOUTHWEST WALL 2	2ND FLOOR PLAN	R-19 Wall	225	Left	249.6	0	90
NORTHEAST WALL 2	2ND FLOOR PLAN	R-19 Wall	45	Right	249.6	36.2	90
R-30 Roof	1ST FLOOR PLAN	R-30 Roof Attic	n/a	n/a	701	n/a	n/a
R-30 Roof 2	2ND FLOOR PLAN	R-30 Roof Attic	n/a	n/a	495	n/a	n/a
Raised Floor	2ND FLOOR PLAN	R-19 Floor W/O Crawlspace	n/a	n/a	163	n/a	n/a
Interior Surface	2ND FLOOR PLAN	Default Floor No Crawlspa	n/a	n/a	332	n/a	n/a

ATTIC

01	02	03	04	05	06	07	08
Name	Construction	Type	Roof Rise (x in 12)	Roof Reflectance	Roof Emittance	Radiant Barrier	Cool Roof
Attic 1ST FLOOR PLAN	Attic Roof1ST FLOOR PLAN	Ventilated	4	0.1	0.85	Yes	No
Attic 2ND FLOOR PLAN	Attic Roof2ND FLOOR PLAN	Ventilated	4	0.1	0.85	Yes	No

FENESTRATION / GLAZING

01	02	03	04	05	06	07	08	09	10	11	12	13	14
Name	Type	Surface	Orientation	Azimuth	Width (ft)	Height (ft)	Mult.	Area (ft^2)	U-factor	U-factor Source	SHGC	SHGC Source	Exterior Shading
WINDOWS	Window	NORTHWEST WALL	Back	315			1	45.5	0.3	NFRC	0.23	NFRC	Bug Screen

REVISIONS | BY

PERFECT DESIGN
•Design & Consulting •Air-Conditioning, Plumbing, Fire Sprinkler System, Electrical, Title 24 Energy Calculation.
2416 W. Valley Blvd. Tel: (626) 289-8808
Alhambra, CA 91803 Fax: (626) 289-4913
E-Mail:perfectaaa2@gmail.com

SINGLE HOUSE
935 N. HILL ROAD
POMONA, CA 91768

REGISTERED PROFESSIONAL ENGINEER
RAYMOND MENG ZHONG
No. M-27635
EXP. 06-30-27
MECHANICAL
STATE OF CALIFORNIA

Date 2/2/2026
Scale
Drawn
Job # M23-2467R
Sheet 1
RESIDENTIAL T24 SHEET
Of 3 Sheets

FENESTRATION / GLAZING

01	02	03	04	05	06	07	08	09	10	11	12	13	14
Name	Type	Surface	Orientation	Azimuth	Width (ft)	Height (ft)	Mult.	Area (ft^2)	U-factor	U-factor Source	SHGC	SHGC Source	Exterior Shading
WINDOWS 2	Window	SOUTHEAST WALL	Front	135			1	28	0.3	NFRC	0.23	NFRC	Bug Screen
WINDOWS 3	Window	SOUTHWEST WALL	Left	225			1	50.7	0.3	NFRC	0.23	NFRC	Bug Screen
WINDOWS 4	Window	NORTHEAST WALL	Right	45			1	84	0.3	NFRC	0.23	NFRC	Bug Screen
WINDOWS 5	Window	NORTHWEST WALL 2	Back	315			1	17.5	0.3	NFRC	0.23	NFRC	Bug Screen
WINDOWS 6	Window	SOUTHEAST WALL 2	Front	135			1	15.5	0.3	NFRC	0.23	NFRC	Bug Screen
WINDOWS 7	Window	NORTHEAST WALL 2	Right	45			1	36.2	0.3	NFRC	0.23	NFRC	Bug Screen

SLAB FLOORS

01	02	03	04	05	06	07	08
Name	Zone	Area (ft^2)	Perimeter (ft)	Edge Insul. R-value and Depth	Edge Insul. R-value and Depth	Carpeted Fraction	Heated
Covered Slab	1ST FLOOR PLAN	1033	147.2	none	0	80%	No

OPAQUE SURFACE CONSTRUCTIONS

01	02	03	04	05	06	07	08
Construction Name	Surface Type	Construction Type	Framing	Total Cavity R-value	Interior / Exterior Continuous R-value	U-factor	Assembly Layers
R-19 Wall	Exterior Walls	Wood Framed Wall	2x6 @ 16 in. O. C.	R-19	None / None	0.074	Inside Finish: Gypsum Board Cavity / Frame: R-19 in 5-1/2 in. (R-18) / 2x6 Exterior Finish: 3 Coat Stucco
Attic Roof1ST FLOOR PLAN	Attic Roofs	Wood Framed Ceiling	2x6 @ 24 in. O. C.	R-19	None / 0	0.052	Roofing: 10 PSF (RoofTileAirGap) Tile Gap: present Roof Deck: Wood Siding/sheathing/decking Cavity / Frame: R-19 / 2x6
Attic Roof2ND FLOOR PLAN	Attic Roofs	Wood Framed Ceiling	2x6 @ 24 in. O. C.	R-19	None / 0	0.052	Roofing: 10 PSF (RoofTileAirGap) Tile Gap: present Roof Deck: Wood Siding/sheathing/decking Cavity / Frame: R-19 / 2x6
R-30 Roof Attic	Ceilings (below attic)	Wood Framed Ceiling	2x8 @ 16 in. O. C.	R-30	None / None	0.033	Over Ceiling Joists: R-11.2 insul. Cavity / Frame: R-18.9 / 2x8 Inside Finish: Gypsum Board
R-19 Floor W/O Crawlspace	Exterior Floors	Wood Framed Floor	2x6 @ 16 in. O. C.	R-19	None / None	0.052	Floor Surface: Carpeted Floor Deck: Wood Siding/sheathing/decking Cavity / Frame: R-19 in 5-1/2 in. (R-18) / 2x6
Default Floor No Crawlspa	Interior Floors	Wood Framed Floor	2x12 @ 16 in. O. C.	R-0	None / None	0.196	Floor Surface: Carpeted Floor Deck: Wood Siding/sheathing/decking Cavity / Frame: no insul. / 2x12 Ceiling Below Finish: Gypsum Board

BUILDING ENVELOPE - HERS VERIFICATION

01	02	03	04	05
Quality Insulation Installation (QII)	High R-value Spray Foam Insulation	Building Envelope Air Leakage	CFM50	CFM50
Required	Not Required	N/A	n/a	n/a

WATER HEATING SYSTEMS

01	02	03	04	05	06	07	08	09
Name	System Type	Distribution Type	Water Heater Name	Number of Units	Solar Heating System	Compact Distribution	HERS Verification	Water Heater Name (#)
DHW Sys 1	Domestic Hot Water (DHW)	Standard	DHW Heater 1	1	n/a	None	n/a	DHW Heater 1 (1)

WATER HEATERS - NEEA HEAT PUMP

01	02	03	04	05	06	07	08
Name	# of Units	Tank Vol. (gal)	NEEA Heat Pump Brand	NEEA Heat Pump Model	Tank Location	Duct Inlet Air Source	Duct Outlet Air Source
DHW Heater 1	1	80	Rheem	XE80T10H22U0 (80 gal, JA13)	Outside	1ST FLOOR PLAN	1ST FLOOR PLAN

WATER HEATING - HERS VERIFICATION

01	02	03	04	05	06	07
Name	Pipe Insulation	Parallel Piping	Compact Distribution	Compact Distribution Type	Recirculation Control	Shower Drain Water Heat Recovery
DHW Sys 1 - 1/1	Not Required	Not Required	Not Required	None	Not Required	Not Required

SPACE CONDITIONING SYSTEMS

01	02	03	04	05	06	07	08
Name	System Type	Heating Unit Name	Heating Equipment Count	Cooling Unit Name	Cooling Equipment Count	Fan Name	Distribution Name
WHOLE HOUSE1	Heat pump heating cooling	Heat Pump System 1	1	Heat Pump System 1	1	HVAC Fan 1	Air Distribution System 1

HVAC - HEAT PUMPS

01	02	03	04	05	06	07	08	09	10	11	12	13
			Heating				Cooling					
Name	System Type	Number of Units	Heating Efficiency Type	HSPF/HSPF2/COP	Cap 47	Cap 17	Cooling Efficiency Type	SEER/SEER2	EER/EER 2/CEER	Zonally Controlled	Compressor Type	HERS Verification
Heat Pump System 1	Central split HP	1	HSPF	9.3	48000	31600	EERSEER	16.8	12.6	Not Zonal	Single Speed	Heat Pump System 1-hers-htpump

HVAC HEAT PUMPS - HERS VERIFICATION

01	02	03	04	05	06	07	08	09
Name	Verified Airflow	Airflow Target	Verified EER/EER2	Verified SEER/SEER2	Verified Refrigerant Charge	Verified HSPF/HSPF2	Verified Heating Cap 47	Verified Heating Cap 17
Heat Pump System 1-hers-htpump	Required	350	Required	Required	Yes	Yes	Yes	Yes

HVAC - DISTRIBUTION SYSTEMS

01	02	03	04	05	06	07	08	09	10	11	12
			Duct Ins. R-value		Duct Location		Surface Area				
Name	Type	Design Type	Supply	Return	Supply	Return	Supply	Return	Bypass Duct	Duct Leakage	HERS Verification
Air Distribution System 1	Unconditioned attic	Verified Design	See duct design	See duct design	Attic	Attic	24.64	0	No Bypass Duct	Sealed and Tested	Air Distribution System 1-hers-dist

HVAC DISTRIBUTION - HERS VERIFICATION

01	02	03	04	05	06	07	08	09
Name	Duct Leakage Verification	Duct Leakage Target (%)	Verified Duct Location	Verified Duct Design	Buried Ducts	Deeply Buried Ducts	Low-leakage Air Handler	Low Leakage Ducts Entirely in Conditioned Space
Air Distribution System 1-hers-dist	Yes	5.0	Not Required	Required	Not Required	Credit not taken	Not Required	No

HVAC - FAN SYSTEMS

01	02	03	04
Name	Type	Fan Power (Watts/CFM)	Name
HVAC Fan 1	HVAC Fan	0.45	HVAC Fan 1-hers-fan

HVAC FAN SYSTEMS - HERS VERIFICATION

01	02	03
Name	Verified Fan Watt Draw	Required Fan Efficacy (Watts/CFM)
HVAC Fan 1-hers-fan	Required	0.45

INDOOR AIR QUALITY (IAQ) FANS

01	02	03	04	05	06	07	08	09
Dwelling Unit	Airflow (CFM)	Fan Efficacy (W/CFM)	IAQ Fan Type	Includes Heat/Energy Recovery?	IAQ Recovery Effectiveness - SRE/ASRE	Includes Fault Indicator Display?	HERS Verification	Status
SFam IAQVentRpt	59	0.35	Exhaust	No	n/a / n/a	No	Yes	

DOCUMENTATION AUTHOR'S DECLARATION STATEMENT

1. I certify that this Certificate of Compliance documentation is accurate and complete.

Documentation Author Name: Raymond Zhong	Documentation Author Signature: Raymond Zhong
Company: Perfect Design	Signature Date: 02/10/2026
Address: 2416 W. Valley Boulevard	CEA/ HERS Certification Identification (if applicable): No. M-27635 EXP. 06-30-27
City/State/Zip: Alhambra, CA 91803	Phone: 626-289-8808

RESPONSIBLE PERSON'S DECLARATION STATEMENT

I certify the following under penalty of perjury, under the laws of the State of California:

1. I am eligible under Division 3 of the Business and Professions Code to accept responsibility for the building design identified on this Certificate of Compliance.
2. I certify that the energy features and performance specifications identified on this Certificate of Compliance conform to the requirements of Title 24, Part 1 and Part 6 of the California Code of Regulations.
3. The building design features or system design features identified on this Certificate of Compliance are consistent with the information provided on other applicable compliance documents, worksheets, calculations, plans and specifications submitted to the enforcement agency for approval with this building permit application.

Responsible Designer Name: HONG LIU	Responsible Designer Signature: HONG LIU
Company: TUNDRA CONSTRUCTION DESIGN & BUILD	Date Signed: 02/10/2026
Address: 15501 CLAYCLIFF COURT	License: 1040237
City/State/Zip: HACIENDA HEIGHTS, CA 91745	Phone: (626) 679-8335

Digitally signed by California Home Energy Efficiency Rating Services (CHEERS). This digital signature is provided in order to secure the content of this registered document, and in no way implies Registration Provider responsibility for the accuracy of the information.

REGISTERED PROFESSIONAL ENGINEER RAYMOND MENG ZHONG No. M-27635 EXP. 06-30-27 MECHANICAL STATE OF CALIFORNIA

REVISIONS | BY

PERFECT DESIGN
Design & Consulting
Air-Conditioning, Plumbing, Fire Sprinkler System, Electrical, Title 24 Energy Calculation.
2416 W. Valley Blvd.
Alhambra, CA 91803
Tel: (626) 289-8808
E-Mail:perfectaaa2@gmail.com Fax: (626) 289-4913

SINGLE HOUSE
935 N. HILL ROAD
POMONA, CA 91768

Date 2/2/2026
Scale
Drawn
Job # M23-2467R
Sheet 2
RESIDENTIAL T24 SHEET
Of 3 Sheets

RESIDENTIAL MEASURES SUMMARY — RMS-1

Project Name	Building Type	Date
SINGLE HOUSE	☑ Single Family ☐ Addition Alone ☐ Multi Family ☐ Existing+ Addition/Alteration	2/2/2026

Project Address	California Energy Climate Zone	Total Cond. Floor Area	Addition	# of Units
935 N. HILL ROAD POMONA	CA Climate Zone 09	1,528	n/a	1

INSULATION

Construction	Type	Cavity	Area (ft^2)	Special Features	Status
Roof	Wood Framed Attic	R 30	1,196	Add=R-19.0	New
Wall	Wood Framed	R 19	1,729		New
Slab	Unheated Slab-on-Grade	- no insulation	1,033	Perim = 147'	New
Demising	Wood Framed w/o Crawl Space	- no insulation	332		New
Floor	Wood Framed w/o Crawl Space	R 19	163		New

FENESTRATION

Total Area: 277 Glazing Percentage: 18.2% New/Altered Average U-Factor: 0.30

Orientation	Area(ft^2)	U-Fac	SHGC	Overhang	Sidefins	Exterior Shades	Status
Rear (NW)	63.0	0.300	0.23	none	none	N/A	New
Front (SE)	43.5	0.300	0.23	none	none	N/A	New
Left (SW)	50.7	0.300	0.23	none	none	N/A	New
Right (NE)	120.2	0.300	0.23	none	none	N/A	New

HVAC SYSTEMS

Qty.	Heating	Min. Eff	Cooling	Min. Eff	Thermostat	Status
1	Electric Heat Pump	9.30 HSPF	Split Heat Pump	16.8 SEER	Setback	New

HVAC DISTRIBUTION

Location	Heating	Cooling	Duct Location	Duct R-Value	Status
WHOLE HOUSE	Ducted	Ducted	Attic	6.0	New

WATER HEATING

Qty.	Type	Gallons	Min. Eff	Distribution	Status
1	Heat Pump	80	3.20	Standard	New

2022 Single-Family Residential Mandatory Requirements Summary

NOTE: Single-family residential buildings subject to the Energy Codes must comply with all applicable mandatory measures, regardless of the compliance approach used. Review the respective section for more information. (04/2022)

Building Envelope:

§ 110.6(a)1:	**Air Leakage.** Manufactured fenestration, exterior doors, and exterior pet doors must limit air leakage to 0.3 CFM per square foot or less when tested per NFRC-400, ASTM E283, or AAMA/WDMA/CSA 101/I.S.2/A440-2011. *
§ 110.6(a)5:	**Labeling.** Fenestration products and exterior doors must have a label meeting the requirements of § 10-111(a).
§ 110.6(b):	**Field fabricated exterior doors and fenestration** products must use U-factors and solar heat gain coefficient (SHGC) values from *Tables* 110.6-A, 110.6-B, or JA4.5 for exterior doors. They must be caulked and/or weather-stripped. *
§ 110.7:	**Air Leakage.** All joints, penetrations, and other openings in the building envelope that are potential sources of air leakage must be caulked, gasketed, or weather stripped.
§ 110.8(a):	**Insulation Certification by Manufacturers.** Insulation must be certified by the Department of Consumer Affairs, Bureau of Household Goods and Services (BHGS).
§ 110.8(g):	**Insulation Requirements for Heated Slab Floors.** Heated slab floors must be insulated per the requirements of § 110.8(g).
§ 110.8(i):	**Roofing Products Solar Reflectance and Thermal Emittance.** The thermal emittance and aged solar reflectance values of the roofing material must meet the requirements of § 110.8(i) and be labeled per §10-113 when the installation of a cool roof is specified on the CF1R.
§ 110.8(j):	**Radiant Barrier.** When required, radiant barriers must have an emittance of 0.05 or less and be certified to the Department of Consumer Affairs.
§ 150.0(a):	**Roof Deck, Ceiling and Rafter Roof Insulation.** Roof decks in newly constructed attics in climate zones 4 and 8-16 area-weighted average U-factor not exceeding U-0.184. Ceiling and rafter roofs minimum R-22 insulation in wood-frame ceiling; or area-weighted average U-factor must not exceed 0.043. Rafter roof alterations minimum R-19 or area-weighted average U-factor of 0.054 or less. Attic access doors must have permanently attached insulation using adhesive or mechanical fasteners. The attic access must be gasketed to prevent air leakage. Insulation must be installed in direct contact with a roof or ceiling which is sealed to limit infiltration and exfiltration, as specified in § 110.7, including but not limited to placing insulation either above or below the roof deck or on top of a drywall ceiling.
§ 150.0(b):	**Loose-fill Insulation.** Loose fill insulation must meet the manufacturer's required density for the labeled R-value.
§ 150.0(c):	**Wall Insulation.** Minimum R-13 insulation in 2x4 inch wood framing wall or have a U-factor of 0.102 or less, or R-20 in 2x6 inch wood framing or have a U-factor of 0.071 or less. Opaque non-framed assemblies must have an overall assembly U-factor not exceeding 0.102. Masonry walls must meet Tables 150.1-A or B. *
§ 150.0(d):	**Raised-floor Insulation.** Minimum R-19 insulation in raised wood framed floor or 0.037 maximum U-factor. *
§ 150.0(f):	**Slab Edge Insulation.** Slab edge insulation must meet all of the following: have a water absorption rate, for the insulation material alone without facings, no greater than 0.3 percent; have a water vapor permeance no greater than 2.0 perm per inch; be protected from physical damage and UV light deterioration; and, when installed as part of a heated slab floor, meet the requirements of § 110.8(g).
§ 150.0(g)1:	**Vapor Retarder.** In climate zones 1 through 16, the earth floor of unvented crawl space must be covered with a Class I or Class II vapor retarder. This requirement also applies to controlled ventilation crawl space for buildings complying with the exception to §150.0(d).
§ 150.0(g)2:	**Vapor Retarder.** In climate zones 14 and 16, a Class I or Class II vapor retarder must be installed on the conditioned space side of all insulation in all exterior walls, vented attics, and unvented attics with air-permeable insulation.
§ 150.0(q):	**Fenestration Products.** Fenestration, including skylights, separating conditioned space from unconditioned space or outdoors must have a maximum U-factor of 0.45; or area-weighted average U-factor of all fenestration must not exceed 0.45.

Fireplaces, Decorative Gas Appliances, and Gas Log:

§ 110.5(e)	**Pilot Light.** Continuously burning pilot lights are not allowed for indoor and outdoor fireplaces.
§ 150.0(e)1:	**Closable Doors.** Masonry or factory-built fireplaces must have a closable metal or glass door covering the entire opening of the firebox.
§ 150.0(e)2:	**Combustion Intake.** Masonry or factory-built fireplaces must have a combustion outside air intake, which is at least six square inches in area and is equipped with a readily accessible, operable, and tight-fitting damper or combustion-air control device.
§ 150.0(e)3:	**Flue Damper.** Masonry or factory-built fireplaces must have a flue damper with a readily accessible control. *

Space Conditioning, Water Heating, and Plumbing System:

§ 110.0-§ 110.3:	**Certification.** Heating, ventilation, and air conditioning (HVAC) equipment, water heaters, showerheads, faucets, and all other regulated appliances must be certified by the manufacturer to the California Energy Commission.
§ 110.2(a):	**HVAC Efficiency.** Equipment must meet the applicable efficiency requirements in Table 110.2-A through Table 110.2-N. *
§ 110.2(b):	**Controls for Heat Pumps with Supplementary Electric Resistance Heaters.** Heat pumps with supplementary electric resistance heaters must have controls that prevent supplementary heater operation when the heating load can be met by the heat pump alone; and in which the cut-on temperature for compression heating is higher than the cut-on temperature for supplementary heating, and the cut-off temperature for compression heating is higher than the cut-off temperature for supplementary heating.
§ 110.2(c):	**Thermostats.** All heating or cooling systems not controlled by a central energy management control system (EMCS) must have a setback thermostat. *
§ 110.3(c)3:	**Insulation.** Unfired service water heater storage tanks and solar water-heating backup tanks must have adequate insulation, or tank surface heat loss rating.
§ 110.3(c)6:	**Isolation Valves.** Instantaneous water heaters with an input rating greater than 6.8 kBtu per hour (2 kW) must have isolation valves with hose bibbs or other fittings on both cold and hot water lines to allow for flushing the water heater when the valves are closed.

2022 Single-Family Residential Mandatory Requirements Summary

§ 110.5:	**Pilot Lights.** Continuously burning pilot lights are prohibited for natural gas: fan-type central furnaces; household cooking appliances (except appliances without an electrical supply voltage connection with pilot lights that consume less than 150 Btu per hour); and pool and spa heaters. *
§ 150.0(h)1:	**Building Cooling and Heating Loads.** Heating and/or cooling loads are calculated in accordance with the ASHRAE Handbook, Equipment Volume, Applications Volume, and Fundamentals Volume; the SMACNA Residential Comfort System Installation Standards Manual; or the ACCA Manual J using design conditions specified in § 150.0(h)2.
§ 150.0(h)3A:	**Clearances.** Air conditioner and heat pump outdoor condensing units must have a clearance of at least five feet from the outlet of any dryer.
§ 150.0(h)3B:	**Liquid Line Drier.** Air conditioners and heat pump systems must be equipped with liquid line filter driers if required, as specified by the manufacturer's instructions.
§ 150.0(j)1:	**Water Piping, Solar Water-heating System Piping, and Space Conditioning System Line Insulation.** All domestic hot water piping must be insulated as specified in § 609.11 of the California Plumbing Code. *
§ 150.0(j)2:	**Insulation Protection.** Piping insulation must be protected from damage, including that due to sunlight, moisture, equipment maintenance, and wind as required by §120.3(b). Insulation exposed to weather must be water retardant and protected from UV light (no adhesive tapes). Insulation covering chilled water piping and refrigerant suction piping located outside the conditioned space must include, or be protected by, a Class I or Class II vapor retarder. Pipe insulation buried below grade must be installed in a waterproof and non-crushable casing or sleeve.
§ 150.0(n)1:	**Gas or Propane Water Heating Systems.** Systems using gas or propane water heaters to serve individual dwelling units must designate a space at least 2.5' x 2.5' x 7' suitable for the future installation of a heat pump water heater, and meet electrical and plumbing requirements, based on the distance between this designated space and the water heater location; and a condensate drain no more than 2" higher than the base of the water heater
§ 150.0(n)3:	**Solar Water-heating Systems.** Solar water-heating systems and collectors must be certified and rated by the Solar Rating and Certification Corporation (SRCC), the International Association of Plumbing and Mechanical Officials, Research and Testing (IAPMO R&T), or by a listing agency that is approved by the executive director.

Ducts and Fans:

§ 110.8(d)3:	**Ducts.** Insulation installed on an existing space-conditioning duct must comply with § 604.0 of the California Mechanical Code (CMC). If a contractor installs the insulation, the contractor must certify to the customer, in writing, that the insulation meets this requirement.
§ 150.0(m)1:	**CMC Compliance.** All air-distribution system ducts and plenums must meet CMC §§ 601.0-605.0 and ANSI/SMACNA-006-2006 HVAC Duct Construction Standards Metal and Flexible 3rd Edition. Portions of supply-air and return-air ducts and plenums must be insulated to R-6.0 or higher; ducts located entirely in conditioned space as confirmed through field verification and diagnostic testing (RA3.1.4.3.8) do not require insulation. Connections of metal ducts and inner core of flexible ducts must be mechanically fastened. Openings must be sealed with mastic, tape, or other duct-closure system that meets the applicable UL requirements, or aerosol sealant that meets UL 723. The combination of mastic and either mesh or tape must be used to seal openings greater than ¼". If mastic or tape is used. Building cavities, air handler support platforms, and plenums designed or constructed with materials other than sealed sheet metal, duct board or flexible duct must not be used to convey conditioned air. Building cavities and support platforms may contain ducts; ducts installed in these spaces must not be compressed. *
§ 150.0(m)2:	**Factory-Fabricated Duct Systems.** Factory-fabricated duct systems must comply with applicable requirements for duct construction, connections, and closures; joints and seams of duct systems and their components must not be sealed with cloth back rubber adhesive duct tapes unless such tape is used in combination with mastic and draw bands.
§ 150.0(m)3:	**Field-Fabricated Duct Systems.** Field-fabricated duct systems must comply with applicable requirements for: pressure-sensitive tapes, mastics, sealants, and other requirements specified for duct construction.
§ 150.0(m)7:	**Backdraft Damper.** Fan systems that exchange air between the conditioned space and outdoors must have backdraft or automatic dampers.
§ 150.0(m)8:	**Gravity Ventilation Dampers.** Gravity ventilating systems serving conditioned space must have either automatic or readily accessible, manually operated dampers in all openings to the outside, except combustion inlet and outlet air openings and elevator shaft vents.
§ 150.0(m)9:	**Protection of Insulation.** Insulation must be protected from damage due tosunlight, moisture, equipment maintenance, and wind. Insulation exposed to weather must be suitable for outdoor service (e.g., protected by aluminum, sheet metal, painted canvas, or plastic cover). Cellular foam insulation must be protected as above or painted with a water retardant and solar radiation-resistant coating.
§ 150.0(m)10:	**Porous Inner Core Flex Duct.** Porous inner cores of flex ducts must have a non-porous layer or air barrier between the inner core and outer vapor barrier.
§ 150.0(m)11:	**Duct System Sealing and Leakage Test.** When space conditioning systems use forced air duct systems to supply conditioned air to an occupiable space, the ducts must be sealed and duct leakage tested, as confirmed through field verification and diagnostic testing, in accordance with Reference Residential Appendix RA3.1..
§ 150.0(m)12:	**Air Filtration.** Space conditioning systems with ducts exceeding 10 feet and the supply side of ventilation systems must have MERV 13 or equivalent filters. Filters for space conditioning systems must have a two inch depth or can be one inch if sized per Equation 150.0-A. Clean-filter pressure drop and labeling must meet the requirements in §150.0(m)12. Filters must be accessible for regular service. Filter racks or grilles must use gaskets, sealing, or other means to close gaps around the inserted filters to and prevents air from bypassing the filter. *

2022 Single-Family Residential Mandatory Requirements Summary

§ 110.0(m)13:	**Space Conditioning System Airflow Rate and Fan Efficacy.** Space conditioning systems that use ducts to supply cooling must have a hole for the placement of a static pressure probe, or a permanently installed static pressure probe in the supply plenum. Airflow must be ≥ 350 CFM per ton of nominal cooling capacity, and an air-handling unit fan efficacy ≤ 0.45 watts per CFM for gas furnace air handlers and ≤ 0.58 watts per CFM for all others. Small duct high velocity systems must provide an airflow ≥ 250 CFM per ton of nominal cooling capacity, and an air-handling unit fan efficacy ≤ 0.62 watts per CFM. Field verification testing is required in accordance with Reference Residential Appendix RA3.3. *

Ventilation and Indoor Air Quality:

§ 150.0(o)1:	**Requirements for Ventilation and Indoor Air Quality**. All dwelling units must meet the requirements of ASHRAE Standard 62.2, Ventilation and Acceptable Indoor Air Quality in Residential Buildings subject to the amendments specified in § 150.0(o)1. *
§ 150.0(o)1B:	**Central Fan Integrated (CFI) Ventilation Systems.** Continuous operation of CFI air handlers is not allowed to provide the whole-dwelling unit ventilation airflow required per §150.0(o)1C. A motorized damper(s) must be installed on the ventilation duct(s) that prevents all airflow through the space conditioning duct system when the damper(s) is closed andcontrolled per §150.0(o)1Biii&iv. CFI ventilation systems must have controls that track outdoor air ventilation run time, and either open or close the motorized damper(s) for compliance with §150.0(o)1C.
§ 150.0(o)1C:	**Whole-Dwelling Unit Mechanical Ventilation for Single-Family Detached and townhouses .** Single-family detached dwelling units, and attached dwelling units not sharing ceilings or floors with other dwelling units, occupiable spaces, public garages, or commercial spaces must have mechanical ventilation airflow specified in § 150.0(o)1Ci-iii.
§ 150.0(o)1G:	**Local Mechanical Exhaust.** Kitchens and bathrooms must have local mechanical exhaust; nonenclosed kitchens must have demand-controlled exhaust system meeting requirements of §150.0(o)1Giii,enclosed kitchens and bathrooms can use demand-controlled or continuous exhaust meeting §150.0(o)1Giii-iv. Airflow must be measured by the installer per §150.0(o)1Gv, and rated for sound per §150.0(o)1Gvi. *
§ 150.0(o)1H&I:	**Airflow Measurement and Sound Ratings of Whole-Dwelling Unit Ventilation Systems.** The airflow required per § 150.0(o)1C must be measured by using a flow hood, flow grid, or other airflow measuring device at the fan's inlet or outlet terminals/grilles per Reference Residential Appendix RA3.7. Whole-Dwelling unit ventilation systems must be rated for sound per ASHRAE 62.2 §7.2 at no less than the minimum airflow rate required by §150.0(o)1C.
§ 150.0(o)2:	**Field Verification and Diagnostic Testing.** Whole-Dwelling Unit ventilation airflow, vented range hood airflow and sound rating, and HRV and ERV fan efficacy must be verified in accordance with Reference Residential Appendix RA3.7. Vented range hoods must be verified per Reference Residential Appendix RA3.7.4.3 to confirm if it is rated by HVI or AHAM to comply with the airflow rates and sound requirements per §150.0(o)1G

Pool and Spa Systems and Equipment:

§ 110.4(a):	**Certification by Manufacturers.** Any pool or spa heating system or equipment must be certified to have all of the following: compliance with the Appliance Efficiency Regulations and listing in MAEDbS; an on-off switch mounted outside of the heater that allows shutting off the heater without adjusting the thermostat setting; a permanent weatherproof plate or card with operating instructions; and must not use electric resistance heating. *
§ 110.4(b)1:	**Piping.** Any pool or spa heating system or equipment must be installed with at least 36 inches of pipe between the filter and the heater, or dedicated suction and return lines, or built-in or built-up connections to allow for future solar heating.
§ 110.4(b)2:	**Covers.** Outdoor pools or spas that have a heat pump or gas heater must have a cover.
§ 110.4(b)3:	**Directional Inlets and Time Switches for Pools.** Pools must have directional inlets that adequately mix the pool water, and a time switch that will allow all pumps to be set or programmed to run only during off-peak electric demand periods.
§ 110.5:	**Pilot Light.** Natural gas pool and spa heaters must not have a continuously burning pilot light.
§ 150.0(p):	**Pool Systems and Equipment Installation.** Residential pool systems or equipment must meet the specified requirements for pump sizing, flow rate, piping, filters, and valves. *

Lighting:

§ 110.9:	**Lighting Controls and Components.** All lighting control devices and systems, ballasts, and luminaires must meet the applicable requirements of § 110.9. *
§ 150.0(k)1A:	**Luminaire Efficacy.** All installed luminaires must meet the requirements in Table 150.0-A, except lighting integral to exhaust fans, kitchen range hoods, bath vanity mirrors, and garage door openers; navigation lighting less than 5 watts; and lighting internal to drawers, cabinets, and linen closets with an efficacy of at least 45 lumens per watt.
§ 150.0(k)1B:	**Screw based luminaires.** Screw based luminaires must contain lamps that comply with Reference Joint Appendix JA8. *
§ 150.0(k)1C:	**Recessed Downlight Luminaires in Ceilings.** Luminaires recessed into ceilings must not contain screw based sockets, must be airtight, and must be sealed with a gasket or caulk. California Electrical Code § 410.116 must also be met.
§ 150.0(k)1D:	**Light Sources in Enclosed or Recessed Luminaires.** Lamps and other separable light sources that are not compliant with the JA8 elevated temperature requirements, including marking requirements, must not be installed in enclosed or recessed luminaires.
§ 150.0(k)1E:	**Blank Electrical Boxes.** The number of electrical boxes that are more than five feet above the finished floor and do not contain a luminaire or other device shall be no more than the number of bedrooms. These boxes must be served by a dimmer, vacancy sensor control, low voltage wiring, or fan speed control.
§ 150.0(k)1F:	**Lighting Integral to Exhaust Fans.** Lighting integral to exhaust fans (except when installed by the manufacturer in kitchen exhaust hoods) must meet the applicable requirements of § 150.0(k).

2022 Single-Family Residential Mandatory Requirements Summary

§ 150.0(k)1G:	**Screw based luminaires.** Screw based luminaires must contain lamps that comply with Reference Joint Appendix JA8. *
§ 150.0(k)1H:	**Light Sources in Enclosed or Recessed Luminaires.** Lamps and other separable light sources that are not compliant with the JA8 elevated temperature requirements, including marking requirements, must not be installed in enclosed or recessed luminaires.
§ 150.0(k)1I:	**Light Sources in Drawers, Cabinets, and Linen Closets.** Light sources internal to drawers, cabinetry or linen closets are not required to comply with Table 150.0-A or be controlled by vacancy sensors provided that they are rated to consume no more than 5 watts of power, emit no more than 150 lumens, and are equipped with controls that automatically turn the lighting off when the drawer, cabinet or linen closet is closed.
§ 150.0(k)2A:	**Interior Switches and Controls.** All forward phase cut dimmers used with LED light sources must comply with NEMA SSL 7A.
§ 150.0(k)2B:	**Interior Switches and Controls.** Exhaust fans must be controlled separately from lighting systems. *
§ 150.0(k)2A:	**Accessible Controls.** Lighting must have readily accessible wall-mounted controls that allow the lighting to be manually turned on and off. *
§ 150.0(k)2B:	**Multiple Controls.** Controls must not bypass a dimmer, occupant sensor, or vacancy sensor function if the dimmer or sensor is installed to comply with § 150.0(k).
§ 150.0(k)2C:	**Mandatory Requirements.** Lighting controls must comply with the applicable requirements of § 110.9.
§ 150.0(k)2D:	**Energy Management Control Systems.** An energy management control system (EMCS) may be used to comply with dimming, occupancy, and control requirements if it provides the functionality of the specified control per § 110.9 and the physical controls specified in § 150.0(k)2A.
§ 150.0(k)2E:	**Automatic Shutoff Controls.** In bathrooms, garages, laundry rooms, utility rooms and walk-in closets, at least one installed luminaire must be controlled by an occupancy or vacancy sensor providing automatic-off functionality. Lighting inside drawers and cabinets with opaque fronts or doors must have controls that turn the light off when the drawer or door is closed.
§ 150.0(k)2F:	**Dimmers.** Lighting in habitable spaces (e.g., living rooms, dining rooms, kitchens, and bedrooms) must have readily accessible wall-mounted dimming controls that allow the lighting to be manually adjusted up and down. Forward phase cut dimmers controlling LED light sources in these spaces must comply with NEMA SSL 7A.
§ 150.0(k)2K:	**Independent controls.** Integrated lighting of exhaust fans shall be controlled independently from the fans. Lighting under cabinets or shelves, lighting in display cabinets, and switched outlets must be controlled separately from ceiling-installed lighting.
§ 150.0(k)3A:	**Residential Outdoor Lighting.** For single-family residential buildings, outdoor lighting permanently mounted to a residential building, or to other buildings on the same lot, must have a manual on/off switch and either a photocell and motion sensor or automatic time switch control) or an astronomical time clock. An energy management control system that provides the specified control functionality and meets all applicable requirements may be used to meet these requirements.
§ 150.0(k)4:	**Internally illuminated address signs.** Internally illuminated address signs must either comply with § 140.8 or consume no more than 5 watts of power.
§ 150.0(k)5:	**Residential Garages for Eight or More Vehicles.** Lighting for residential parking garages for eight or more vehicles must comply with the applicable requirements for nonresidential garages in §§ 110.9, 130.0, 130.1, 130.4, 140.6, and 141.0.

Solar Readiness:

§ 110.10(a)1:	**Single-family Residences.** Single-family residences located in subdivisions with 10 or more single-family residences and where the application for a tentative subdivision map for the residences has been deemed complete and approved by the enforcement agency, which do not have a photovoltaic system installed, must comply with the requirements of § 110.10(b)-(e).
§110.10(b)1A:	**Minimum Solar Zone Area.** The solar zone must have a minimum total area as described below. The solar zone must comply with access, pathway, smoke ventilation, and spacing requirements as specified in Title 24, Part 9 or other parts of Title 24 or in any requirements adopted by a local jurisdiction. The solar zone total area must be comprised of areas that have no dimension less than 5 feet and are no less than 80 square feet each for buildings with roof areas less than or equal to 10,000 square feet or no less than 160 square feet each for buildings with roof areas greater than 10,000 square feet. For single-family residences, the solar zone must be located on the roof or overhang of the building and have a total area no less than 250 square feet. *
§ 110.10(b)2:	**Azimuth.** All sections of the solar zone located on steep-sloped roofs must have an azimuth between 90-300° of true north.
§ 110.10(b)3A:	**Shading.** The solar zone must not contain any obstructions, including but not limited to: vents, chimneys, architectural features, and roof mounted equipment.
§ 110.10(b)3B:	**Shading.** Any obstruction located on the roof or any other part of the building that projects above a solar zone must be located at least twice the horizontal distance of the height difference between the highest point of the obstruction and the horizontal projection of the nearest point of the solar zone, measured in the vertical plane. *
§ 110.10(b)4:	**Structural Design Loads on Construction Documents.** For areas of the roof designated as a solar zone, the structural design loads for roof dead load and roof live load must be clearly indicated on the construction documents.
§ 110.10(c):	**Interconnection Pathways.** The construction documents must indicate: a location reserved for inverters and metering equipment and a pathway reserved for routing of conduit from the solar zone to the point of interconnection with the electrical service; and for single-family residences and central water-heating systems, a pathway reserved for routing plumbing from the solar zone to the water-heating system.
§ 110.10(d):	**Documentation.** A copy of the construction documents or a comparable document indicating the information from § 110.10(b)-(c) must be provided to the occupant.
§ 110.10(e)1:	**Main Electrical Service Panel.** The main electrical service panel must have a minimum busbar rating of 200 amps.
§ 110.10(e)2:	**Main Electrical Service Panel.** The main electrical service panel must have a reserved space to allow for the installation of a double pole circuit breaker for a future solar electric installation. The reserved space must be permanently marked as "For Future Solar Electric."

Electric and Energy Storage Ready:

HVAC SYSTEM HEATING AND COOLING LOADS SUMMARY

Project Name	Date
SINGLE HOUSE	2/2/2026
System Name	**Floor Area**
WHOLE HOUSE	1,528

ENGINEERING CHECKS		SYSTEM LOAD	COIL COOLING PEAK CFM	COIL COOLING PEAK Sensible	COIL COOLING PEAK Latent	COIL HTG. PEAK CFM	COIL HTG. PEAK Sensible
Number of Systems	1						
Heating System		Total Room Loads	595	14,133	974	466	17,896
Output per System	48,000	Return Vented Lighting		0			
Total Output (Btuh)	48,000	Return Air Ducts		663			768
Output (Btuh/sqft)	31.4	Return Fan		0			0
Cooling System		Ventilation	0	0	0	0	0
Output per System	46,500	Supply Fan		0			0
Total Output (Btuh)	46,500	Supply Air Ducts		663			768
Total Output (Tons)	3.9						
Total Output (Btuh/sqft)	30.4						
Total Output (sqft/Ton)	394.3	TOTAL SYSTEM LOAD		15,459	974		19,432
Air System							
CFM per System	1,600	HVAC EQUIPMENT SELECTION					
Airflow (cfm)	1,600	CARRIER 25HNA948/FE4ANB006 (4 TON)		35,487	7,475		30,803
Airflow (cfm/sqft)	1.05						
Airflow (cfm/Ton)	412.9						
Outside Air (%)	0.0%	Total Adjusted System Output (Adjusted for Peak Design conditions)		35,487	7,475		30,803
Outside Air (cfm/sqft)	0.00						
Note: values above given at ARI conditions		TIME OF SYSTEM PEAK		Aug 3 PM			Jan 1 AM

HEATING SYSTEM PSYCHROMETRICS (Airstream Temperatures at Time of Heating Peak)

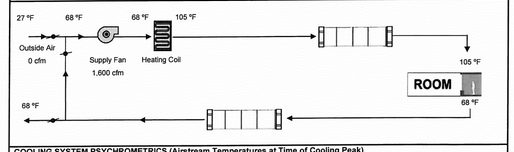

COOLING SYSTEM PSYCHROMETRICS (Airstream Temperatures at Time of Cooling Peak)

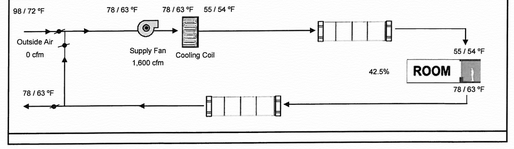

PERFECT DESIGN
•Design & Consulting
•Air-Conditioning, Plumbing, Fire Sprinkler System,
Electrical, Title 24 Energy Calculation.
2416 W. Valley Blvd. Tel: (626) 289-8808
Alhambra, CA 91803 Fax: (626) 289-4913
E-Mail:perfectaaa2@gmail.com

REVISIONS	BY

SINGLE HOUSE
935 N. HILL ROAD
POMONA, CA 91768

REGISTERED PROFESSIONAL ENGINEER
RAYMOND MENG ZHONG
No. M-27635
EXP. 06-30-27
MECHANICAL
STATE OF CALIFORNIA

Date	2/2/2026
Scale	
Drawn	
Job #	M23-2467R
Sheet	3
	RESIDENTIAL T24 SHEET
Of	3 Sheets

2022 CALIFORNIA GREEN BUILDING STANDARDS CODE
RESIDENTIAL MANDATORY MEASURES, SHEET 1 (July 2024 Supplement)

Y = YES
N/A = NOT APPLICABLE
RESPON. PARTY = RESPONSIBLE PARTY (ie: ARCHITECT, ENGINEER, OWNER, CONTRACTOR, INSPECTOR ETC.)

CHAPTER 3
GREEN BUILDING
SECTION 301 GENERAL

301.1 SCOPE. Buildings shall be designed to include the green building measures specified as mandatory in the application checklists contained in this code. Voluntary green building measures are also included in the application checklists and may be included in the design and construction of structures covered by this code, but are not required unless adopted by a city, county, or city and county as specified in Section 101.7.

301.1.1 Additions and alterations. [HCD] The mandatory provisions of Chapter 4 shall be applied to additions or alterations of existing residential buildings where the addition or alteration increases the building's conditioned area, volume, or size. The requirements shall apply only to and/or within the specific area of the addition or alteration.

The mandatory provision of Section 4.106.4.2 may apply to additions or alterations of existing parking facilities or the addition of new parking facilities serving existing multifamily buildings. See Section 4.106.4.3 for application.

Note: Repairs including, but not limited to, resurfacing, restriping and repairing or maintaining existing lighting fixtures are not considered alterations for the purpose of this section.

Note: On and after January 1, 2014, residential buildings undergoing permitted alterations, additions, or improvements shall replace noncompliant plumbing fixtures with water-conserving plumbing fixtures. Plumbing fixture replacement is required prior to issuance of a certificate of final completion, certificate of occupancy or final permit approval by the local building department. See Civil Code Section 1101.1, et seq., for the definition of a noncompliant plumbing fixture, types of residential buildings affected and other important enactment dates.

301.2 LOW-RISE AND HIGH-RISE RESIDENTIAL BUILDINGS. [HCD] The provisions of individual sections of CALGreen may apply to either low-rise residential buildings high-rise residential buildings, or both. Individual sections will be designated by banners to indicate where the section applies specifically to low-rise only (LR) or high-rise only (HR). When the section applies to both low-rise and high-rise buildings, no banner will be used.

SECTION 302 MIXED OCCUPANCY BUILDINGS

302.1 MIXED OCCUPANCY BUILDINGS. In mixed occupancy buildings, each portion of a building shall comply with the specific green building measures applicable to each specific occupancy.
Exceptions:
1. [HCD] Accessory structures and accessory occupancies serving residential buildings shall comply with Chapter 4 and Appendix A4, as applicable.
2. [HCD] For purposes of CALGreen, live/work units, complying with Section 419 of the *California Building Code*, shall not be considered mixed occupancies. Live/Work units shall comply with Chapter 4 and Appendix A4, as applicable.

DIVISION 4.1 PLANNING AND DESIGN

ABBREVIATION DEFINITIONS:

HCD	Department of Housing and Community Development
BSC	California Building Standards Commission
DSA-SS	Division of the State Architect, Structural Safety
OSHPD	Office of Statewide Health Planning and Development
LR	Low Rise
HR	High Rise
AA	Additions and Alterations
N	New

CHAPTER 4
RESIDENTIAL MANDATORY MEASURES

SECTION 4.102 DEFINITIONS

4.102.1 DEFINITIONS
The following terms are defined in Chapter 2 *(and are included here for reference)*

FRENCH DRAIN. A trench, hole or other depressed area loosely filled with rock, gravel, fragments of brick or similar pervious material used to collect or channel drainage or runoff water.

WATTLES. Wattles are used to reduce sediment in runoff. Wattles are often constructed of natural plant materials such as hay, straw or similar material shaped in the form of tubes and placed on a downflow slope. Wattles are also used for perimeter and inlet controls.

4.106 SITE DEVELOPMENT

4.106.1 GENERAL. Preservation and use of available natural resources shall be accomplished through evaluation and careful planning to minimize negative effects on the site and adjacent areas. Preservation of slopes, management of storm water drainage and erosion controls shall comply with this section.

4.106.2 STORM WATER DRAINAGE AND RETENTION DURING CONSTRUCTION. Projects which disturb less than one acre of soil and are not part of a larger common plan of development which in total disturbs one acre or more, shall manage storm water drainage during construction. In order to manage storm water drainage during construction, one or more of the following measures shall be implemented to prevent flooding of adjacent property, prevent erosion and retain soil runoff on the site.

1. Retention basins of sufficient size shall be utilized to retain storm water on the site.
2. Where storm water is conveyed to a public drainage system, collection point, gutter or similar disposal method, water shall be filtered by use of a barrier system, wattle or other method approved by the enforcing agency.
3. Compliance with a lawfully enacted storm water management ordinance.

Note: Refer to the State Water Resources Control Board for projects which disturb one acre or more of soil, or are part of a larger common plan of development which in total disturbs one acre or more of soil.

(Website: https://www.waterboards.ca.gov/water_issues/programs/stormwater/construction.html)

4.106.3 GRADING AND PAVING. Construction plans shall indicate how the site grading or drainage system will manage all surface water flows to keep water from entering buildings. Examples of methods to manage surface water include, but are not limited to, the following:

1. Swales
2. Water collection and disposal systems
3. French drains
4. Water retention gardens
5. Other water measures which keep surface water away from buildings and aid in groundwater recharge.

Exception: Additions and alterations not altering the drainage path.

4.106.4 Electric vehicle (EV) charging for new construction. New construction shall comply with Section 4.106.4.1 or 4.106.4.2. Electric vehicle supply equipment (EVSE) shall comply with the *California Electrical Code*.

Exceptions:
1. On a case-by-case basis, where the local enforcing agency has determined EV charging and infrastructure are not feasible based upon one or more of the following conditions:
   1.1 Where there is no local utility power supply or the local utility is unable to supply adequate power.
   1.2 Where there is evidence suitable to the local enforcing agency substantiating that additional local utility infrastructure design requirements, directly related to the implementation of Section 4.106.4, may adversely impact the construction cost of the project.
2. Accessory Dwelling Units (ADU) and Junior Accessory Dwelling Units (JADU) without additional parking facilities.

4.106.4.1 New one- and two-family dwellings and townhouses with attached private garages. For each dwelling unit, install a listed raceway to accommodate a dedicated 208/240-volt branch circuit. The raceway shall not be less than trade size 1 (nominal 1-inch inside diameter). The raceway shall originate at the main service or subpanel and shall terminate into a listed cabinet, box or other enclosure in close proximity to the proposed location of an EV charger. Raceways are required to be continuous at enclosed, inaccessible or concealed areas and spaces. The service panel and/or subpanel shall provide capacity to install a 40-ampere 208/240-volt minimum dedicated branch circuit and space(s) reserved to permit installation of a branch circuit overcurrent protective device.

Exemption: A raceway is not required if a minimum 40-ampere 208/240-volt dedicated EV branch circuit is installed in close proximity to the proposed location of an EV charger at the time of original construction in accordance with the *California Electrical Code*.

4.106.4.1.1 Identification. The service panel or subpanel circuit directory shall identify the overcurrent protective device space(s) reserved for future EV charging as "EV CAPABLE". The raceway termination location shall be permanently and visibly marked as "EV CAPABLE".

4.106.4.2 New multifamily dwellings, hotels and motels and new residential parking facilities.
When parking is provided, parking spaces for new multifamily dwellings, hotels and motels shall meet the requirements of Section 4.106.4.2.2. Calculations for spaces shall be rounded up to the nearest whole number. A parking space served by electric vehicle supply equipment or designed as an EV charging space shall count as at least one standard automobile parking space only for the purpose of complying with any applicable minimum parking space requirements established by a local jurisdiction. See Vehicle Code Section 22511.2 for further details.

4.106.4.2.1 Reserved.

4.106.4.2.2 Multifamily dwellings, hotels and motels

1. EV ready parking spaces with receptacles.

a. Hotels and motels. Forty (40) percent of the total number of parking spaces shall be equipped with low power Level 2 EV charging receptacles.

b. Multifamily parking facilities. Forty (40) percent of the total number of parking spaces shall be equipped with low power Level 2 EV charging receptacles. EV charging receptacles required by this section shall be located in at least one assigned parking space per dwelling unit where assigned parking is provided but need not exceed forty (40) percent of the total number of assigned parking spaces provided on the site.

Exception: Areas of parking facilities served by parking lifts, including but not limited to automated mechanical-access open parking garages as defined in the *California Building Code*; or parking facilities otherwise incapable of supporting electric vehicle charging.

c. Receptacle power source. EV charging receptacles in multifamily parking facilities shall be provided with a dedicated branch circuit connected to the dwelling unit's electrical panel, unless determined as infeasible by the project builder or designer and subject to concurrence of the local enforcing agency.

Exception: Areas of parking facilities served by parking lifts, including but not limited to automated mechanical-access open parking garages as defined in the *California Building Code*; or parking facilities otherwise incapable of supporting electric vehicle charging.

d. Receptacle configurations. 208/240V EV charging receptacles shall comply with one of the following configurations:

1. For 20-ampere receptacles, NEMA 6-20R
2. For 30-ampere receptacles, NEMA 14-30R
3. For 50-ampere receptacles, NEMA 14-50R

2. EV ready parking spaces with EV chargers.

a. Hotels and motels. Ten (10) percent of the total number of parking spaces shall be equipped with Level 2 EV chargers. At least fifty (50) percent of the required EV chargers shall be equipped with J1772 connectors.

b. Multifamily parking facilities. Ten (10) percent of the total number of parking spaces shall be equipped with Level 2 EV chargers. At least fifty (50) percent of the required EV chargers shall be equipped with J1772 connectors. Where common use parking or unassigned parking is provided, EV chargers shall be located in common use or unassigned parking areas and shall be available for use by all residents or guests.

Where low power Level 2 EV charging receptacles or Level 2 EV chargers are installed beyond the minimum required, an automatic load management system (ALMS) may be used to reduce the maximum required electrical capacity to each space served by the ALMS. The electrical system and any on-site distribution transformers shall have sufficient capacity to deliver at least 3.3 kW simultaneously to each EV charging station (EVCS) served by the ALMS. The branch circuit shall have a minimum capacity of 40 amperes, and installed EV chargers shall have a capacity of not less than 30 amperes.

4.106.4.2.2.1 Electric vehicle charging stations (EVCS).
Electric vehicle charging stations required by Section 4.106.4.2.2, Item 2, with EV chargers installed shall comply with Section 4.106.4.2.2.1.1.

Exception: Electric vehicle charging stations serving public accommodations, public housing, motels and hotels shall not be required to comply with this section. See *California Building Code*, Chapter 11B, for applicable requirements.

4.106.4.2.2.1.1 Electric vehicle charging stations (EVCS) spaces with EV chargers installed; dimensions and location.

EVCS spaces shall be designed to comply with the following:

1. The minimum length of each EVCS space shall be 18 feet (5486 mm).
2. The minimum width of each EVCS space shall be 9 feet (2743 mm).
3. One in every 25 EVCS spaces, but not less than one, shall also have an 8-foot (2438 mm) wide minimum aisle. A 5-foot (1524 mm) wide minimum aisle shall be permitted provided the minimum width of the EVCS space is 12 feet (3658 mm). Surface slope for this EVCS space and the aisle shall not exceed 1 unit vertical in 48 units horizontal (2.083 percent slope) in any direction. These EVCS spaces shall also comply with at least one of the following:

   a. The EVCS space shall be located adjacent to an accessible parking space meeting the requirements of the *California Building Code*, Chapter 11A, to allow use of the EV charger from the accessible parking space.
   b. The EVCS space shall be located on an accessible route, as defined in the *California Building Code*, Chapter 2, to the building.
   Exception: Electric vehicle charging stations designed and constructed in compliance with the *California Building Code*, Chapter 11B, are not required to comply with Section 4.106.4.2.2.1.1.

4.106.4.2.2.1.2 Accessible electric vehicle charging station spaces.
In addition to the requirements in Section 4.106.4.2.2.1.1, all EV chargers, where installed, shall comply with the accessibility provisions for EV chargers in the *California Building Code*, Chapter 11B. EV ready spaces and EVCS in multifamily developments shall comply with *California Building Code*, Chapter 11A, Section 1109A.

4.106.4.2.3 Reserved.

4.106.4.2.4 Reserved.

4.106.4.2.5 Electric vehicle ready space signage.
Electric vehicle ready spaces shall be identified by signage or pavement markings, in compliance with Caltrans Traffic Operations Policy Directive 13-01 (Zero Emission Vehicle Signs and Pavement Markings) or its successor(s).

4.106.4.3 Electric vehicle charging for additions and alterations of parking facilities serving existing multi-family buildings.
Where new parking facilities are added, or electrical systems or lighting of existing parking facilities are added or altered and the work requires a building permit, ten (10) percent of the total number of parking spaces added or altered shall be EV capable spaces to support future Level 2 electric vehicle supply equipment. The service panel or subpanel circuit directory shall identify the overcurrent protective device space(s) reserved for future EV charging purposes as "EV CAPABLE."

Notes:

1.Construction documents are intended to demonstrate the project's capability and capacity for facilitating future EV charging.

2.There is no requirement for EV spaces to be constructed or available until EV chargers are installed for use.

DIVISION 4.2 ENERGY EFFICIENCY

4.201 GENERAL

4.201.1 SCOPE. For the purposes of mandatory energy efficiency standards in this code, the California Energy Commission will continue to adopt mandatory standards.

DIVISION 4.3 WATER EFFICIENCY AND CONSERVATION

4.303 INDOOR WATER USE

4.303.1 WATER CONSERVING PLUMBING FIXTURES AND FITTINGS. Plumbing fixtures (water closets and urinals) and fittings (faucets and showerheads) shall comply with the sections 4.303.1.1, 4.303.1.2, 4.303.1.3, and 4.303.4.4.

Note: All noncompliant plumbing fixtures in any residential real property shall be replaced with water-conserving plumbing fixtures. Plumbing fixture replacement is required prior to issuance of a certificate of final completion, certificate of occupancy, or final permit approval by the local building department. See Civil Code Section 1101.1, et seq., for the definition of a noncompliant plumbing fixture, types of residential buildings affected and other important enactment dates.

4.303.1.1 Water Closets. The effective flush volume of all water closets shall not exceed 1.28 gallons per flush. Tank-type water closets shall be certified to the performance criteria of the U.S. EPA WaterSense Specification for Tank-type Toilets.

Note: The effective flush volume of dual flush toilets is defined as the composite, average flush volume of two reduced flushes and one full flush.

4.303.1.2 Urinals. The effective flush volume of wall mounted urinals shall not exceed 0.125 gallons per flush. The effective flush volume of all other urinals shall not exceed 0.5 gallons per flush.

4.303.1.3 Showerheads.

4.303.1.3.1 Single Showerhead. Showerheads shall have a maximum flow rate of not more than 1.8 gallons per minute at 80 psi. Showerheads shall be certified to the performance criteria of the U.S. EPA WaterSense Specification for Showerheads.

4.303.1.3.2 Multiple showerheads serving one shower. When a shower is served by more than one showerhead, the combined flow rate of all the showerheads and/or other shower outlets controlled by a single valve shall not exceed 1.8 gallons per minute at 80 psi, or the shower shall be designed to only allow one shower outlet to be in operation at a time.

Note: A hand-held shower shall be considered a showerhead.

4.303.1.4 Faucets.

4.303.1.4.1 Residential Lavatory Faucets. The maximum flow rate of residential lavatory faucets shall not exceed 1.2 gallons per minute at 60 psi. The minimum flow rate of residential lavatory faucets shall not be less than 0.8 gallons per minute at 20 psi.

4.303.1.4.2 Lavatory Faucets in Common and Public Use Areas. The maximum flow rate of lavatory faucets installed in common and public use areas (outside of dwellings or sleeping units) in residential buildings shall not exceed 0.5 gallons per minute at 60 psi.

4.303.1.4.3 Metering Faucets. Metering faucets when installed in residential buildings shall not deliver more than 0.2 gallons per cycle.

4.303.1.4.4 Kitchen Faucets. The maximum flow rate of kitchen faucets shall not exceed 1.8 gallons per minute at 60 psi. Kitchen faucets may temporarily increase the flow above the maximum rate, but not to exceed 2.2 gallons per minute at 60 psi, and must default to a maximum flow rate of 1.8 gallons per minute at 60 psi.

Note: Where complying faucets are unavailable, aerators or other means may be used to achieve reduction.

4.303.1.4.5 Pre-rinse spray valves.
When installed, shall meet the requirements in the *California Code of Regulations*, Title 20 (Appliance Efficiency Regulations), Sections 1605.1 (h)(4) Table H-2, Section 1605.3 (h)(4)(A), and Section 1607 (d)(7) and shall be equipped with an integral automatic shutoff.

FOR REFERENCE ONLY: The following table and code section have been reprinted from the *California Code of Regulations*, Title 20 (Appliance Efficiency Regulations),Section 1605.1 (h)(4) and Section 1605.3 (h)(4)(A).

TABLE H-2

STANDARDS FOR COMMERCIAL PRE-RINSE SPRAY VALVES MANUFACTURED ON OR AFTER JANUARY 28, 2019

PRODUCT CLASS [spray force in ounce force (ozf)]	MAXIMUM FLOW RATE (gpm)
Product Class 1 (≤ 5.0 ozf)	1.00
Product Class 2 (> 5.0 ozf and ≤ 8.0 ozf)	1.20
Product Class 3 (> 8.0 ozf)	1.28

Title 20 Section 1605.3 (h)(4)(A): Commercial prerinse spray values manufactured on or after January 1, 2006, shall have a minimum spray force of not less than 4.0 ounces-force (ozf)[113 grams-force(gf)]

4.303.2 Submeters for multifamily buildings and dwelling units in mixed-used residential/commercial buildings.
Submeters shall be installed to measure water usage of individual rental dwelling units in accordance with the *California Plumbing Code*.

4.303.3 Standards for plumbing fixtures and fittings. Plumbing fixtures and fittings shall be installed in accordance with the *California Plumbing Code*, and shall meet the applicable standards referenced in Table 1701.1 of the *California Plumbing Code*.

NOTE:
THIS TABLE COMPILES THE DATA IN SECTION 4.303.1, AND IS INCLUDED AS A CONVENIENCE FOR THE USER.

TABLE - MAXIMUM FIXTURE WATER USE

FIXTURE TYPE	FLOW RATE
SHOWER HEADS (RESIDENTIAL)	1.8 GMP @ 80 PSI
LAVATORY FAUCETS (RESIDENTIAL)	MAX. 1.2 GPM @ 60 PSI MIN. 0.8 GPM @ 20 PSI
LAVATORY FAUCETS IN COMMON & PUBLIC USE AREAS	0.5 GPM @ 60 PSI
KITCHEN FAUCETS	1.8 GPM @ 60 PSI
METERING FAUCETS	0.2 GAL/CYCLE
WATER CLOSET	1.28 GAL/FLUSH
URINALS	0.125 GAL/FLUSH

4.304 OUTDOOR WATER USE

4.304.1 OUTDOOR POTABLE WATER USE IN LANDSCAPE AREAS. Residential developments shall comply with a local water efficient landscape ordinance or the current California Department of Water Resources' Model Water Efficient Landscape Ordinance (MWELO), whichever is more stringent.

NOTES:

1. The Model Water Efficient Landscape Ordinance (MWELO) is located in the *California Code Regulations,* Title 23, Chapter 2.7, Division 2. MWELO and supporting documents, including water budget calculator, are available at: https://www.water.ca.gov/

DIVISION 4.4 MATERIAL CONSERVATION AND RESOURCE EFFICIENCY

4.406 ENHANCED DURABILITY AND REDUCED MAINTENANCE

4.406.1 RODENT PROOFING. Annular spaces around pipes, electric cables, conduits or other openings in sole/bottom plates at exterior walls shall be protected against the passage of rodents by closing such openings with cement mortar, concrete masonry or a similar method acceptable to the enforcing agency.

4.408 CONSTRUCTION WASTE REDUCTION, DISPOSAL AND RECYCLING

4.408.1 CONSTRUCTION WASTE MANAGEMENT. Recycle and/or salvage for reuse a minimum of 65 percent of the non-hazardous construction and demolition waste in accordance with either Section 4.408.2, 4.408.3 or 4.408.4, or meet a more stringent local construction and demolition waste management ordinance.

Exceptions:

1. Excavated soil and land-clearing debris.
2. Alternate waste reduction methods developed by working with local agencies if diversion or recycle facilities capable of compliance with this item do not exist or are not located reasonably close to the jobsite.
3. The enforcing agency may make exceptions to the requirements of this section when isolated jobsites are located in areas beyond the haul boundaries of the diversion facility.

4.408.2 CONSTRUCTION WASTE MANAGEMENT PLAN. Submit a construction waste management plan in conformance with Items 1 through 5. The construction waste management plan shall be updated as necessary and shall be available during construction for examination by the enforcing agency.

1. Identify the construction and demolition waste materials to be diverted from disposal by recycling, reuse on the project or salvage for future use or sale.
2. Specify if construction and demolition waste materials will be sorted on-site (source separated) or bulk mixed (single stream).
3. Identify diversion facilities where the construction and demolition waste material collected will be taken.
4. Identify construction methods employed to reduce the amount of construction and demolition waste generated.
5. Specify that the amount of construction and demolition waste materials diverted shall be calculated by weight or volume, but not by both.

4.408.3 WASTE MANAGEMENT COMPANY. Utilize a waste management company, approved by the enforcing agency, which can provide verifiable documentation that the percentage of construction and demolition waste material diverted from the landfill complies with Section 4.408.1.

Note: The owner or contractor may make the determination if the construction and demolition waste materials will be diverted by a waste management company.

4.408.4 WASTE STREAM REDUCTION ALTERNATIVE [LR]. Projects that generate a total combined weight of construction and demolition waste disposed of in landfills, which do not exceed 3.4 lbs./sq.ft. of the building area shall meet the minimum 65% construction waste reduction requirement in Section 4.408.1

4.408.4.1 WASTE STREAM REDUCTION ALTERNATIVE. Projects that generate a total combined weight of construction and demolition waste disposed of in landfills, which do not exceed 2 pounds per square foot of the building area, shall meet the minimum 65% construction waste reduction requirement in Section 4.408.1

4.408.5 DOCUMENTATION. Documentation shall be provided to the enforcing agency which demonstrates compliance with Section 4.408.2, items 1 through 5, Section 4.408.3 or Section 4.408.4..

Notes:

1. Sample forms found in "A Guide to the California Green Building Standards Code (Residential)" located at www.hcd.ca.gov/CALGreen.html may be used to assist in documenting compliance with this section.
2. Mixed construction and demolition debris (C & D) processors can be located at the California Department of Resources Recycling and Recovery (CalRecycle).

4.410 BUILDING MAINTENANCE AND OPERATION

4.410.1 OPERATION AND MAINTENANCE MANUAL. At the time of final inspection, a manual, compact disc, web-based reference or other media acceptable to the enforcing agency which includes all of the following shall be placed in the building:

1. Directions to the owner or occupant that the manual shall remain with the building throughout the life cycle of the structure.
2. Operation and maintenance instructions for the following:
   a. Equipment and appliances, including water-saving devices and systems, HVAC systems, photovoltaic systems, electric vehicle chargers, water-heating systems and other major appliances and equipment.
   b. Roof and yard drainage, including gutters and downspouts.
   c. Space conditioning systems, including condensers and air filters.
   d. Landscape irrigation systems.
   e. Water reuse systems.
3. Information from local utility, water and waste recovery providers on methods to further reduce resource consumption, including recycle programs and locations.
4. Public transportation and/or carpool options available in the area.
5. Educational material on the positive impacts of an interior relative humidity between 30-60 percent and what methods an occupant may use to maintain the relative humidity level in that range.
6. Information about water-conserving landscape and irrigation design and controllers which conserve water.
7. Instructions for maintaining gutters and downspouts and the importance of diverting water at least 5 feet away from the foundation.
8. Information on required routine maintenance measures, including, but not limited to, caulking, painting, grading around the building, etc.
9. Information about state solar energy and incentive programs available.
10. A copy of all special inspections verifications required by the enforcing agency or this code.
11. Information from the Department of Forestry and Fire Protection on maintenance of defensible space around residential structures.
12. Information and/or drawings identifying the location of grab bar reinforcements.

4.410.2 RECYCLING BY OCCUPANTS. Where 5 or more multifamily dwelling units are constructed on a building site, provide readily accessible area(s) that serves all buildings on the site and are identified for the depositing, storage and collection of non-hazardous materials for recycling, including (at a minimum) paper, corrugated cardboard, glass, plastics, organic waster, and metals, or meet a lawfully enacted local recycling ordinance, if more restrictive.

Exception: Rural jurisdictions that meet and apply for the exemption in Public Resources Code Section 42649.82 (a)(2)(A) et seq. are note required to comply with the organic waste portion of this section.

DIVISION 4.5 ENVIRONMENTAL QUALITY

SECTION 4.501 GENERAL

4.501.1 Scope
The provisions of this chapter shall outline means of reducing the quality of air contaminants that are odorous, irritating and/or harmful to the comfort and well being of a building's installers, occupants and neighbors.

SECTION 4.502 DEFINITIONS

5.102.1 DEFINITIONS
The following terms are defined in Chapter 2 *(and are included here for reference)*

AGRIFIBER PRODUCTS. Agrifiber products include wheatboard, strawboard, panel substrates and door cores, not including furniture, fixtures and equipment (FF&E) not considered base building elements.

COMPOSITE WOOD PRODUCTS. Composite wood products include hardwood plywood, particleboard and medium density fiberboard. "Composite wood products" does not include hardboard, structural plywood, structural panels, structural composite lumber, oriented strand board, glued laminated timber, prefabricated wood I-joists or finger-jointed lumber, all as specified in California Code of regulations (CCR), title 17, Section 93120.1.

DIRECT-VENT APPLIANCE. A fuel-burning appliance with a sealed combustion system that draws all air for combustion from the outside atmosphere and discharges all flue gases to the outside atmosphere.

DISCLAIMER:*THIS DOCUMENT IS PROVIDED AND INTENDED TO BE USED AS A MEANS TO INDICATE AREAS OF COMPLIANCE WITH THE CALIFORNIA GREEN BUILDING STANDARDS (CALGREEN) CODE. DUE TO THE VARIABLES BETWEEN BUILDING DEPARTMENT JURISDICTIONS, THIS CHECKLIST IS TO BE USED ON AN INDIVIDUAL PROJECT BASIS AND MAY BE MODIFIED BY THE END USER TO MEET THOSE INDIVIDUAL NEEDS. THE END USER ASSUMES ALL RESPONSIBILITY ASSOCIATED WITH THE USE OF THIS DOCUMENT, INCLUDING VERIFICATION WITH THE FULL CODE.*

2022 CALIFORNIA GREEN BUILDING STANDARDS CODE
RESIDENTIAL MANDATORY MEASURES, SHEET 2 (July 2024 Supplement)

Y = YES
N/A = NOT APPLICABLE
RESPON. PARTY = RESPONSIBLE PARTY (ie: ARCHITECT, ENGINEER, OWNER, CONTRACTOR, INSPECTOR ETC.)

Y	N/A	RESPON. PARTY

MAXIMUM INCREMENTAL REACTIVITY (MIR). The maximum change in weight of ozone formed by adding a compound to the "Base Reactive Organic Gas (ROG) Mixture" per weight of compound added, expressed to hundredths of a gram (g O^3/g ROC).
Note: MIR values for individual compounds and hydrocarbon solvents are specified in CCR, Title 17, Sections 94700 and 94701.

MOISTURE CONTENT. The weight of the water in wood expressed in percentage of the weight of the oven-dry wood.

PRODUCT-WEIGHTED MIR (PWMIR). The sum of all weighted-MIR for all ingredients in a product subject to this article. The PWMIR is the total product reactivity expressed to hundredths of a gram of ozone formed per gram of product (excluding container and packaging).
Note: PWMIR is calculated according to equations found in CCR, Title 17, Section 94521 (a).

REACTIVE ORGANIC COMPOUND (ROC). Any compound that has the potential, once emitted, to contribute to ozone formation in the troposphere.

VOC. A volatile organic compound (VOC) broadly defined as a chemical compound based on carbon chains or rings with vapor pressures greater than 0.1 millimeters of mercury at room temperature. These compounds typically contain hydrogen and may contain oxygen, nitrogen and other elements. See CCR Title 17, Section 94508(a).

☐	X	

4.503 FIREPLACES
4.503.1 GENERAL. Any installed gas fireplace shall be a direct-vent sealed-combustion type. Any installed woodstove or pellet stove shall comply with U.S. EPA New Source Performance Standards (NSPS) emission limits as applicable, and shall have a permanent label indicating they are certified to meet the emission limits. Woodstoves, pellet stoves and fireplaces shall also comply with applicable local ordinances.

X	☐	CONTRACTOR

4.504 POLLUTANT CONTROL
4.504.1 COVERING OF DUCT OPENINGS & PROTECTION OF MECHANICAL EQUIPMENT DURING CONSTRUCTION. At the time of rough installation, during storage on the construction site and until final startup of the heating, cooling and ventilating equipment, all duct and other related air distribution component openings shall be covered with tape, plastic, sheet metal or other methods acceptable to the enforcing agency to reduce the amount of water, dust or debris which may enter the system.

X	☐	CONTRACTOR

4.504.2 FINISH MATERIAL POLLUTANT CONTROL. Finish materials shall comply with this section.

X	☐	CONTRACTOR

4.504.2.1 Adhesives, Sealants and Caulks. Adhesives, sealant and caulks used on the project shall meet the requirements of the following standards unless more stringent local or regional air pollution or air quality management district rules apply:

1. Adhesives, adhesive bonding primers, adhesive primers, sealants, sealant primers and caulks shall comply with local or regional air pollution control or air quality management district rules where applicable or SCAQMD Rule 1168 VOC limits, as shown in Table 4.504.1 or 4.504.2, as applicable. Such products also shall comply with the Rule 1168 prohibition on the use of certain toxic compounds (chloroform, ethylene dichloride, methylene chloride, perchloroethylene and trichloroethylene), except for aerosol products, as specified in Subsection 2 below.

2. Aerosol adhesives, and smaller unit sizes of adhesives, and sealant or caulking compounds (in units of product, less packaging, which do not weigh more than 1 pound and do not consist of more than 16 fluid ounces) shall comply with statewide VOC standards and other requirements, including prohibitions on use of certain toxic compounds, of *California Code of Regulations*, Title 17, commencing with section 94507.

X	☐	CONTRACTOR

4.504.2.2 Paints and Coatings. Architectural paints and coatings shall comply with VOC limits in Table 1 of the ARB Architectural Suggested Control Measure, as shown in Table 4.504.3, unless more stringent local limits apply. The VOC content limit for coatings that do not meet the definitions for the specialty coatings categories listed in Table 4.504.3 shall be determined by classifying the coating as a Flat, Nonflat or Nonflat-High Gloss coating, based on its gloss, as defined in subsections 4.21, 4.36, and 4.37 of the 2007 California Air Resources Board, Suggested Control Measure, and the corresponding Flat, Nonflat or Nonflat-High Gloss VOC limit in Table 4.504.3 shall apply.

X	☐	CONTRACTOR

4.504.2.3 Aerosol Paints and Coatings. Aerosol paints and coatings shall meet the Product-weighted MIR Limits for ROC in Section 94522(a)(2) and other requirements, including prohibitions on use of certain toxic compounds and ozone depleting substances, in Sections 94522(e)(1) and (f)(1) of *California Code of Regulations*, Title 17, commencing with Section 94520; and in areas under the jurisdiction of the Bay Area Air Quality Management District additionally comply with the percent VOC by weight of product limits of Regulation 8, Rule 49.

X	☐	CONTRACTOR

4.504.2.4 Verification. Verification of compliance with this section shall be provided at the request of the enforcing agency. Documentation may include, but is not limited to, the following:

1. Manufacturer's product specification.
2. Field verification of on-site product containers.

TABLE 4.504.1 - ADHESIVE VOC LIMIT[1,2]
(Less Water and Less Exempt Compounds in Grams per Liter)

ARCHITECTURAL APPLICATIONS	VOC LIMIT
INDOOR CARPET ADHESIVES	50
CARPET PAD ADHESIVES	50
OUTDOOR CARPET ADHESIVES	150
WOOD FLOORING ADHESIVES	100
RUBBER FLOOR ADHESIVES	60
SUBFLOOR ADHESIVES	50
CERAMIC TILE ADHESIVES	65
VCT & ASPHALT TILE ADHESIVES	50
DRYWALL & PANEL ADHESIVES	50
COVE BASE ADHESIVES	50
MULTIPURPOSE CONSTRUCTION ADHESIVE	70
STRUCTURAL GLAZING ADHESIVES	100
SINGLE-PLY ROOF MEMBRANE ADHESIVES	250
OTHER ADHESIVES NOT LISTED	50
SPECIALTY APPLICATIONS	
PVC WELDING	510
CPVC WELDING	490
ABS WELDING	325
PLASTIC CEMENT WELDING	250
ADHESIVE PRIMER FOR PLASTIC	550
CONTACT ADHESIVE	80
SPECIAL PURPOSE CONTACT ADHESIVE	250
STRUCTURAL WOOD MEMBER ADHESIVE	140
TOP & TRIM ADHESIVE	250
SUBSTRATE SPECIFIC APPLICATIONS	
METAL TO METAL	30
PLASTIC FOAMS	50
POROUS MATERIAL (EXCEPT WOOD)	50
WOOD	30
FIBERGLASS	80

1. IF AN ADHESIVE IS USED TO BOND DISSIMILAR SUBSTRATES TOGETHER, THE ADHESIVE WITH THE HIGHEST VOC CONTENT SHALL BE ALLOWED.

2. FOR ADDITIONAL INFORMATION REGARDING METHODS TO MEASURE THE VOC CONTENT SPECIFIED IN THIS TABLE, SEE SOUTH COAST AIR QUALITY MANAGEMENT DISTRICT RULE 1168.

Y	N/A	RESPON. PARTY
		CONTRACTOR

TABLE 4.504.2 - SEALANT VOC LIMIT
(Less Water and Less Exempt Compounds in Grams per Liter)

SEALANTS	VOC LIMIT
ARCHITECTURAL	250
MARINE DECK	760
NONMEMBRANE ROOF	300
ROADWAY	250
SINGLE-PLY ROOF MEMBRANE	450
OTHER	420
SEALANT PRIMERS	
ARCHITECTURAL	
NON-POROUS	250
POROUS	775
MODIFIED BITUMINOUS	500
MARINE DECK	760
OTHER	750

TABLE 4.504.3 - VOC CONTENT LIMITS FOR ARCHITECTURAL COATINGS[2,3]
GRAMS OF VOC PER LITER OF COATING, LESS WATER & LESS EXEMPT COMPOUNDS

COATING CATEGORY	VOC LIMIT
FLAT COATINGS	50
NON-FLAT COATINGS	100
NONFLAT-HIGH GLOSS COATINGS	150
SPECIALTY COATINGS	
ALUMINUM ROOF COATINGS	400
BASEMENT SPECIALTY COATINGS	400
BITUMINOUS ROOF COATINGS	50
BITUMINOUS ROOF PRIMERS	350
BOND BREAKERS	350
CONCRETE CURING COMPOUNDS	350
CONCRETE/MASONRY SEALERS	100
DRIVEWAY SEALERS	50
DRY FOG COATINGS	150
FAUX FINISHING COATINGS	350
FIRE RESISTIVE COATINGS	350
FLOOR COATINGS	100
FORM-RELEASE COMPOUNDS	250
GRAPHIC ARTS COATINGS (SIGN PAINTS)	500
HIGH TEMPERATURE COATINGS	420
INDUSTRIAL MAINTENANCE COATINGS	250
LOW SOLIDS COATINGS[4]	120
MAGNESITE CEMENT COATINGS	450
MASTIC TEXTURE COATINGS	100
METALLIC PIGMENTED COATINGS	500
MULTICOLOR COATINGS	250
PRETREATMENT WASH PRIMERS	420
PRIMERS, SEALERS, & UNDERCOATERS	100
REACTIVE PENETRATING SEALERS	350
RECYCLED COATINGS	250
ROOF COATINGS	50
RUST PREVENTATIVE COATINGS	250
SHELLACS	
CLEAR	730
OPAQUE	550
SPECIALTY PRIMERS, SEALERS & UNDERCOATERS	100
STAINS	250
STONE CONSOLIDANTS	450
SWIMMING POOL COATINGS	340
TRAFFIC MARKING COATINGS	100
TUB & TILE REFINISH COATINGS	420
WATERPROOFING MEMBRANES	250
WOOD COATINGS	275
WOOD PRESERVATIVES	350
ZINC-RICH PRIMERS	340

1. GRAMS OF VOC PER LITER OF COATING, INCLUDING WATER & EXEMPT COMPOUNDS

2. THE SPECIFIED LIMITS REMAIN IN EFFECT UNLESS REVISED LIMITS ARE LISTED IN SUBSEQUENT COLUMNS IN THE TABLE.

3. VALUES IN THIS TABLE ARE DERIVED FROM THOSE SPECIFIED BY THE CALIFORNIA AIR RESOURCES BOARD, ARCHITECTURAL COATINGS SUGGESTED CONTROL MEASURE, FEB. 1, 2008. MORE INFORMATION IS AVAILABLE FROM THE AIR RESOURCES BOARD.

Y	N/A	RESPON. PARTY
☐	X	

Y	N/A	RESPON. PARTY
☐	X	

Y	N/A	RESPON. PARTY
X	☐	CONTRACTOR

Y	N/A	RESPON. PARTY
X	☐	CONTRACTOR

Y	N/A	RESPON. PARTY
X	☐	CONTRACTOR

TABLE 4.504.5 - FORMALDEHYDE LIMITS[1]
MAXIMUM FORMALDEHYDE EMISSIONS IN PARTS PER MILLION

PRODUCT	CURRENT LIMIT
HARDWOOD PLYWOOD VENEER CORE	0.05
HARDWOOD PLYWOOD COMPOSITE CORE	0.05
PARTICLE BOARD	0.09
MEDIUM DENSITY FIBERBOARD	0.11
THIN MEDIUM DENSITY FIBERBOARD[2]	0.13

1. VALUES IN THIS TABLE ARE DERIVED FROM THOSE SPECIFIED BY THE CALIF. AIR RESOURCES BOARD, AIR TOXICS CONTROL MEASURE FOR COMPOSITE WOOD AS TESTED IN ACCORDANCE WITH ASTM E 1333. FOR ADDITIONAL INFORMATION, SEE CALIF. CODE OF REGULATIONS, TITLE 17, SECTIONS 93120 THROUGH 93120.12.

2. THIN MEDIUM DENSITY FIBERBOARD HAS A MAXIMUM THICKNESS OF 5/16" (8 MM).

DIVISION 4.5 ENVIRONMENTAL QUALITY (continued)
4.504.3 CARPET SYSTEMS. All carpet installed in the building interior shall meet the requirements of the California Department of Public Health, "Standard Method for the Testing and Evaluation of Volatile Organic Chemical Emissions from Indoor Sources Using Environmental Chambers," Version 1.2, January 2017 (Emission testing method for California Specification 01350)

See California Department of Public Health's website for certification programs and testing labs.

https://www.cdph.ca.gov/Programs/CCDPHP/DEODC/EHLB/IAQ/Pages/VOC.aspx.

4.504.3.1 Carpet cushion. All carpet cushion installed in the building interior shall meet the requirements of the California Department of Public Health, "Standard Method for the Testing and Evaluation of Volatile Organic Chemical Emissions from Indoor Sources Using Environmental Chambers," Version 1.2, January 2017 (Emission testing method for California Specification 01350)

See California Department of Public Health's website for certification programs and testing labs.

https://www.cdph.ca.gov/Programs/CCDPHP/DEODC/EHLB/IAQ/Pages/VOC.aspx.

☐	X	

4.504.3.2 Carpet adhesive. All carpet adhesive shall meet the requirements of Table 4.504.1.

X	☐	CONTRACTOR

4.504.4 RESILIENT FLOORING SYSTEMS. Where resilient flooring is installed , at least 80% of floor area receiving resilient flooring shall meet the requirements of the California Department of Public Health, "Standard Method for the Testing and Evaluation of Volatile Organic Chemical Emissions from Indoor Sources Using Environmental Chambers," Version 1.2, January 2017 (Emission testing method for California Specification 01350)

See California Department of Public Health's website for certification programs and testing labs.

hhttps://www.cdph.ca.gov/Programs/CCDPHP/DEODC/EHLB/IAQ/Pages/VOC.aspx.

X	☐	CONTRACTOR

4.504.5 COMPOSITE WOOD PRODUCTS. Hardwood plywood, particleboard and medium density fiberboard composite wood products used on the interior or exterior of the buildings shall meet the requirements for formaldehyde as specified in ARB's Air Toxics Control Measure for Composite Wood (17 CCR 93120 et seq.), by or before the dates specified in those sections, as shown in Table 4.504.5

X	☐	CONTRACTOR

4.504.5.1 Documentation. Verification of compliance with this section shall be provided as requested by the enforcing agency. Documentation shall include at least one of the following:

1. Product certifications and specifications.
2. Chain of custody certifications.
3. Product labeled and invoiced as meeting the Composite Wood Products regulation (see CCR, Title 17, Section 93120, et seq.).
4. Exterior grade products marked as meeting the PS-1 or PS-2 standards of the Engineered Wood Association, the Australian AS/NZS 2269, European 636 3S standards, and Canadian CSA 0121, CSA 0151, CSA 0153 and CSA 0325 standards.
5. Other methods acceptable to the enforcing agency.

4.505 INTERIOR MOISTURE CONTROL
4.505.1 General. Buildings shall meet or exceed the provisions of the *California Building Standards Code*.

4.505.2 CONCRETE SLAB FOUNDATIONS. Concrete slab foundations required to have a vapor retarder by California Building Code, Chapter 19, or concrete slab-on-ground floors required to have a vapor retarder by the California Residential Code, Chapter 5, shall also comply with this section.

X	☐	CONTRACTOR

4.505.2.1 Capillary break. A capillary break shall be installed in compliance with at least one of the following:

1. A 4-inch (101.6 mm) thick base of 1/2 inch (12.7mm) or larger clean aggregate shall be provided with a vapor barrier in direct contact with concrete and a concrete mix design, which will address bleeding, shrinkage, and curling, shall be used. For additional information, see American Concrete Institute, ACI 302.2R-06.
2. Other equivalent methods approved by the enforcing agency.
3. A slab design specified by a licensed design professional.

4.505.3 MOISTURE CONTENT OF BUILDING MATERIALS. Building materials with visible signs of water damage shall not be installed. Wall and floor framing shall not be enclosed when the framing members exceed 19 percent moisture content. Moisture content shall be verified in compliance with the following:

1. Moisture content shall be determined with either a probe-type or contact-type moisture meter.Equivalent moisture verification methods may be approved by the enforcing agency and shall satisfy requirements found in Section 101.8 of this code.
2. Moisture readings shall be taken at a point 2 feet (610 mm) to 4 feet (1219 mm) from the grade stamped end of each piece verified.
3. At least three random moisture readings shall be performed on wall and floor framing with documentation acceptable to the enforcing agency provided at the time of approval to enclose the wall and floor framing.

Insulation products which are visibly wet or have a high moisture content shall be replaced or allowed to dry prior to enclosure in wall or floor cavities. Wet-applied insulation products shall follow the manufacturers' drying recommendations prior to enclosure.

X	☐	CONTRACTOR

4.506 INDOOR AIR QUALITY AND EXHAUST
4.506.1 Bathroom exhaust fans. Each bathroom shall be mechanically ventilated and shall comply with the following:

1. Fans shall be ENERGY STAR compliant and be ducted to terminate outside the building.
2. Unless functioning as a component of a whole house ventilation system, fans must be controlled by a humidity control.
   a. Humidity controls shall be capable of adjustment between a relative humidity range less than or equal to 50% to a maximum of 80%. A humidity control may utilize manual or automatic means of adjustment.
   b. A humidity control may be a separate component to the exhaust fan and is not required to be integral (i.e., built-in)

Notes:

1. For the purposes of this section, a bathroom is a room which contains a bathtub, shower or tub/shower combination.
2. Lighting integral to bathroom exhaust fans shall comply with the *California Energy Code*.

4.507 ENVIRONMENTAL COMFORT
4.507.2 HEATING AND AIR-CONDITIONING SYSTEM DESIGN. Heating and air conditioning systems shall be sized, designed and have their equipment selected using the following methods:

X	☐	CONTRACTOR

1. The heat loss and heat gain is established according to ANSI/ACCA 2 Manual J - 2011 (Residential Load Calculation), ASHRAE handbooks or other equivalent design software or methods.
2. Duct systems are sized according to ANSI/ACCA 1 Manual D - 2014 (Residential Duct Systems), ASHRAE handbooks or other equivalent design software or methods.
3. Select heating and cooling equipment according to ANSI/ACCA 3 Manual S - 2014 (Residential Equipment Selection), or other equivalent design software or methods.

Exception: Use of alternate design temperatures necessary to ensure the system functions are acceptable.

Y	N/A	RESPON. PARTY
X	☐	CONTRACTOR

Y	N/A	RESPON. PARTY
☐	X	

Y	N/A	RESPON. PARTY
X	☐	CONTRACTOR

CHAPTER 7
INSTALLER & SPECIAL INSPECTOR QUALIFICATIONS
702 QUALIFICATIONS
702.1 INSTALLER TRAINING. HVAC system installers shall be trained and certified in the proper installation of HVAC systems including ducts and equipment by a nationally or regionally recognized training or certification program. Uncertified persons may perform HVAC installations when under the direct supervision and responsibility of a person trained and certified to install HVAC systems or contractor licensed to install HVAC systems. Examples of acceptable HVAC training and certification programs include but are not limited to the following:

1. State certified apprenticeship programs.
2. Public utility training programs.
3. Training programs sponsored by trade, labor or statewide energy consulting or verification organizations.
4. Programs sponsored by manufacturing organizations.
5. Other programs acceptable to the enforcing agency.

702.2 SPECIAL INSPECTION [HCD]. When required by the enforcing agency, the owner or the responsible entity acting as the owner's agent shall employ one or more special inspectors to provide inspection or other duties necessary to substantiate compliance with this code. Special inspectors shall demonstrate competence to the satisfaction of the enforcing agency for the particular type of inspection or task to be performed. In addition to other certifications or qualifications acceptable to the enforcing agency, the following certifications or education may be considered by the enforcing agency when evaluating the qualifications of a special inspector:

1. Certification by a national or regional green building program or standard publisher.
2. Certification by a statewide energy consulting or verification organization, such as HERS raters, building performance contractors, and home energy auditors.
3. Successful completion of a third party apprentice training program in the appropriate trade.
4. Other programs acceptable to the enforcing agency.

Notes:

1. Special inspectors shall be independent entities with no financial interest in the materials or the project they are inspecting for compliance with this code.
2. HERS raters are special inspectors certified by the California Energy Commission (CEC) to rate homes in California according to the Home Energy Rating System (HERS).

[BSC] When required by the enforcing agency, the owner or the responsible entity acting as the owner's agent shall employ one or more special inspectors to provide inspection or other duties necessary to substantiate compliance with this code. Special inspectors shall demonstrate competence to the satisfaction of the enforcing agency for the particular type of inspection or task to be performed. In addition, the special inspector shall have a certification from a recognized state, national or international association, as determined by the local agency. The area of certification shall be closely related to the primary job function, as determined by the local agency.

Note: Special inspectors shall be independent entities with no financial interest in the materials or the project they are inspecting for compliance with this code.

703 VERIFICATIONS
703.1 DOCUMENTATION. Documentation used to show compliance with this code shall include but is not limited to, construction documents, plans, specifications, builder or installer certification, inspection reports, or other methods acceptable to the enforcing agency which demonstrate substantial conformance. When specific documentation or special inspection is necessary to verify compliance, that method of compliance will be specified in the appropriate section or identified applicable checklist.

X	☐	CONTRACTOR

DISCLAIMER: *THIS DOCUMENT IS PROVIDED AND INTENDED TO BE USED AS A MEANS TO INDICATE AREAS OF COMPLIANCE WITH THE CALIFORNIA GREEN BUILDING STANDARDS (CALGREEN) CODE. DUE TO THE VARIABLES BETWEEN BUILDING DEPARTMENT JURISDICTIONS, THIS CHECKLIST IS TO BE USED ON AN INDIVIDUAL PROJECT BASIS AND MAY BE MODIFIED BY THE END USER TO MEET THOSE INDIVIDUAL NEEDS. THE END USER ASSUMES ALL RESPONSIBILITY ASSOCIATED WITH THE USE OF THIS DOCUMENT, INCLUDING VERIFICATION WITH THE FULL CODE.*