ROOF PLAN

SCALE: 1":15'-0"

MICROINVERTER WITH BUILT IN RAPID SHUTDOWN LOCATED AT EACH PANEL

ALL ARRAY AND ROOF INFORMATION IS SHOWN TO THE RIGHT INCLUDING FRAMING AND ATTACHMENT SPACING.

CONDUIT SHALL BE EMT CONDUIT (EXTERIOR) OR EMT OR FMC AS AHJ ALLOWS (INTERIOR), CONTRACTOR TO RUN CONDUIT ON ROOF AND UNDER EAVES OR WITHIN ATTIC. CONDUIT RUN TO BE DETERMINED AT THE TIME OF INSTALL. ANY EXPOSED CONDUIT SHALL BE PAINTED TO MATCH THE ADJACENT SURFACE.

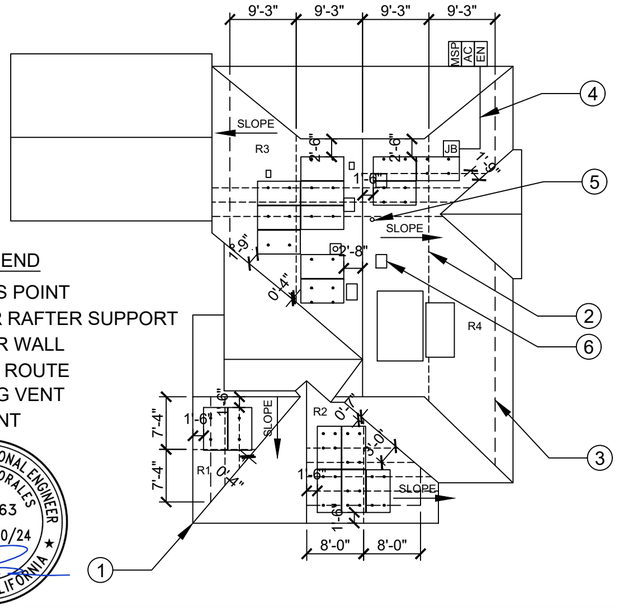

ROOF PLAN LEGEND

1. FIRE ACCESS POINT
2. (E) INTERIOR RAFTER SUPPORT
3. (E) EXTERIOR WALL
4. (N) CONDUIT ROUTE
5. (E) PLUMBING VENT
6. (E) ROOF VENT

LICENSED PROFESSIONAL ENGINEER DOUGLAS MORALES C 69163 EXP. 06/30/24 CIVIL STATE OF CALIFORNIA

ARRAY & ROOF INFO

Roof Plane	1	2
Roof Type:	1 LAYER OF COMP SHINGLE	1 LAYER OF COMP SHINGLE
Roof Framing:	2x6 RAFTERS @ 24" o.c	2x6 RAFTERS @ 24" o.c
Roof Azimuth (deg):	180	90
Roof Slope (deg):	32	32
Roof Area (sf):	133	242
Array Azimuth (deg):	180	90
Array Tilt (deg):	32	32
Array Area (sf):	39.8	99.5
% Coverage of Roof	1.2%	3.0%
# of Panels	2	5
Attachment spacing (in):	48	48

Roof Plane	3	4
Roof Type:	1 LAYER OF COMP SHINGLE	1 LAYER OF COMP SHINGLE
Roof Framing:	2x6 RAFTERS @ 24" o.c	2x6 RAFTERS @ 24" o.c
Roof Azimuth (deg):	270	90
Roof Slope (deg):	32	32
Roof Area (sf):	523	711
Array Azimuth (deg):	270	90
Array Tilt (deg):	32	32
Array Area (sf):	159.2	59.7
% Coverage of Roof	4.7%	1.8%
# of Panels	8	3
Attachment spacing (in):	48	48

MODULE TYPE, DIMENSIONS & WEIGHT

PANEL TYPE:	REC400AA Pure		
PANEL WEIGHT:	45 LB		
PANEL DIMENSIONS:	71.7 IN. X 40 IN.		
PANEL AREA:	19.90 SF		
UNIT WEIGHT OF PANELS:	45LB/19.9SF	=	2.26 PSF
RACKING	0.20 PSF		
AREA PER ATTACHMENT:	4'X2.99'	=	12.0 SF
WEIGHT PER ATTACHMENT:	12SFX2.46PSF	=	32.4 LB

ATTACHMENT DETAIL

SCALE: 1/2" = 1'-0"

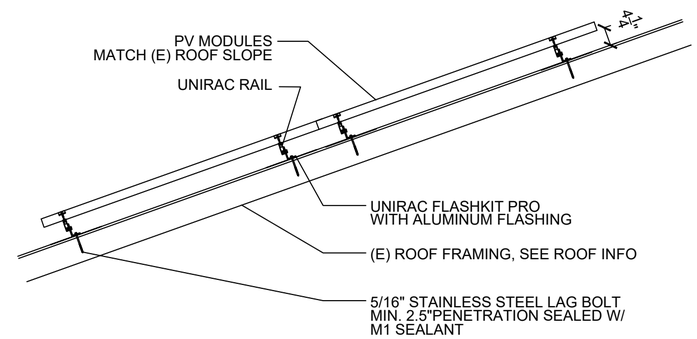

ELECTRICAL NOTES

1. PV ARRAYS ARE PER SINGLE LINE..
2. PV ARRAY COMBINER/JUNCTION BOX PROVIDES TRANSITION FROM ARRAY WIRING TO CONDUIT WIRING.
3. USE UFER GROUND ELECTRODE SYSTEM FROM INVERTER TO EXISTING MAIN SERVICE GROUND ELECTRODE PER CEC 250.58.
4. ALL GROUND CONNECTED TO MAIN SERVICE GROUND IN MAIN SERVICE PANEL.
5. CONNECTORS SHALL BE POLARIS OR EUROSTRIP IT CONNECTORS.
6. INVERTER SHALL BE PER SINGLE LINE, SEE ATTACHED CUT SHEET.
7. AC DISCONNECT SHALL BE PER SINGLE LINE.
8. EQUIPMENT GROUNDING CONDUCTORS ON AC AND DC SIDE SIZED ACCORDING TO CEC 690.
9. ALL CONDUCTORS SHALL BE 600V, 90C STANDARD COPPER. ALL CONDUCTORS IN CONDUIT SHALL BE THWN-2.
10. MAXIMUM DC VOLTAGE DROP SHALL BE 1.5%
11. ALL CONDUCTORS SHALL BE IN CONDUIT UNLESS OTHERWISE NOTED.
12. ALL WORK TO COMPLY WITH 2019 CALIFORNIA ELECTRIC CODE, 2019 CALIFORNIA BUILDING CODE
13. EXACT CONDUIT RUN LOCATIONS SUBJECT TO CHANGE.
14. 3.0 PSF MAX (.5 PSF FROM RACKING, 2.5 PSF FROM MODULES) DEAD LOAD CONTRIBUTED FROM SOLAR ARRAY.
15. CONDUCTORS ON ROOF ARE TO BE 1/2" TO 3" OFF OF THE ROOF SURFACE.
16.GEC TO BE CONNECTED TO EXISTING UFER. IF UFER IS NOT PRESENT THEN A NEW GROUND ROD WILL BE ADDED FOR GROUNDNG PURPOSES.
17. AN INSULATED GROUNDED CONDUCTOR OF 6 AWG OR SMALLER SHALL BE IDENTIFIED AS WHITE.
18. AN EQUIPMENT GROUNDING CONDUCTOR SHALL NOT BE SMALLER THAN 14 AWG.
19. GROUNDING ELECTRODE CONDUCTOR(S) SHALL BE INSTALLED IN ONE CONTINUOUS LENGTH WITHOUT A SPLICE OR JOINT. IF NECESSARY, SPLICES OR CONNECTIONS SHALL BE MADE AS PERMITTED.

RACKING & MODULES ARE GROUNDED VIA A CONTINUOUS #6AWG COPPER CONDUCTOR CONNECTED W/ UNIRAC INTEGRATED GROUND. MODULES ARE FACTORY PROVIDED W/ 2 THREADED HOLES TO FACILITATE LANDING OF THE LUGS

DC SIDE OF ARRAY IS UNGROUNDED AND THEREFORE GEC IS NOT REQUIRED.

ALL EQUIPMENT SHALL BE PROPERLY GROUNDED AND BONDED IN ACCORDANCE WITH ARTICLE 250.

ALL CIRCUITS CONNECTED TO MORE THAN ONE SOURCE SHALL HAVE OVERCURRENT DEVICES LOCATED SO AS TO PROVIDE OVERCURRENT PROTECTION FROM ALL SOURCES PER CEC 690.9 (A)

GROUNDING:
UNIRAC INTEGRATED
CLAMP
MODEL # 30-20-27-C
UL LISTED #2703

ELECTRICAL SINGLE LINE DIAGRAM

7.200kW DC STC, 6.652 kW CEC-AC SOLAR ARRAY

18 REC Solar 400W MODULES TOTAL

STRINGS CONNECTED IN PARALLEL

	LOW MEAN TEMP PER ASHRAE HANDBOOK	MFR VOLTAGE TEMP COEFFICIENT (oC)	VOLTAGE LOW TEMP. CORR. (oC)	HIGH AMBIENT TEMP (oC)	CONDUIT HEIGHT (in)	ROOF TOP ADDED TEMP PER Table 310.15(B)(3)© (oC)	ADJUSTED TEMP	TEMP CORRECTION
ROOF	2	-0.24	1.06	30	ABOVE 7/8" MIN.	0	30	1.00
WALL	2			30	N/A	0	30	1.00

MAX PV VOLTAGE & CURRENT CALCS:
RECORD LOW TEMP (˚C): (PER ASHRAE HANDBOOK) 2
TEMP COEFFICIENT (Voc) PER MANUFACTURER: -0.24%/C
VOLTAGE CORRECTION: 1.06
MAX PV SYSTEM VOLTAGE (PER CEC 2019 690.7):
(Vcorrection * Voc)
(1.06*48.8) = 51.7V
MAX PV CONTINUOUS CURRENT PER CEC 2019 690.8(A)(1):
1.25 X Isc X # STRINGS
1.25*10.25 = 12.81A

PANEL DECAL
REC Solar REC400AA Pure 400W
Vmp= 42.1V Voc= 48.8V
Isc= 10.25A Imp= 9.51A
CEC PTC POWER=381W
Enphase Energy IQ8M-72-2-US (SI1-JUN20) (240V) INVERTER
MAX DC VOLTAGE: 60V
DC VOLTAGE INPUT RANGE: 25-58V @240V
PEAK POWER TRACKING VOLTAGE: 36-45V @240V
AC NOMINAL VOLTAGE/RANGE: 211-264V @240V
MAX AC OUTPUT CURRENT: 1.35A
CEC WEIGHTED EFFICIENCY: 97% @240V

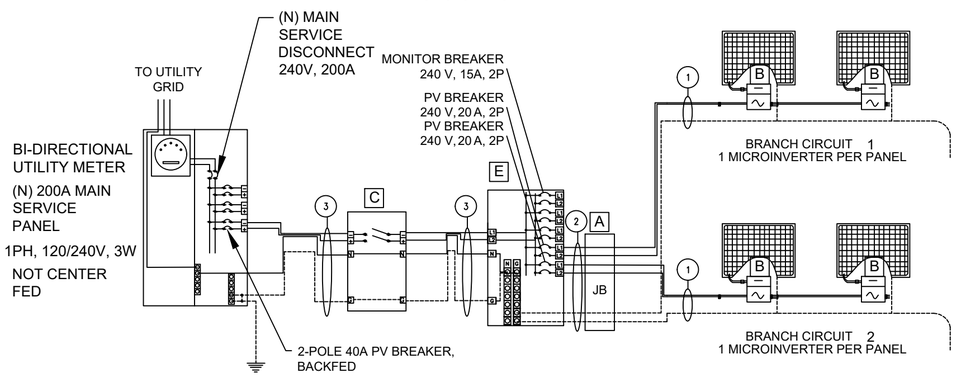

BRANCH CIRCUIT	# OF PANELS	TILT, AZIMUTH
1	9	32°, 90° & 32°, 180° & 32°, 270°
2	9	32°, 90° & 32°, 270°
TOTAL # OF PANELS	18	

ELECTRICAL EQUIPMENT CALLOUTS

A JUNCTION BOX
600 V, NEMA 3R W/
EUROSTRIP OR POLARIS IT CONNECTORS

B 0.325kW INVERTER UNGROUNDED
ENPHASE ENERGY IQ8M-72-2-US (SI1-JUN20) (240V) (240V) INVERTER 240 VAC, 1.35 A NEMA 3R, UL LISTED, (WITH INTEGRATED DC DISCONNECT)

C AC DISCONNECT
240 VAC, 60A NEMA 3R, UL LISTED

E ENPHASE COMBINER BOX, 125A
ENPHASE IQ COMBINER 4 X-IQ-AM1-240-4
240V, NEMA 3R, UL 1741

PV BREAKER IS TO BE LOCATED AT THE OPPOSITE END OF THE BUS BAR FROM THE MAIN BREAKER.

120% RULE

BUS BAR	MAIN BREAKER	ALLOWED MAX PV OCPD
200A	200A	40A

MODULES ARE CONNECTED IN PARALLEL, NOT IN SERIES.
EACH MICROINVERTER IS EQUIPPED WITH RAPID SHUTDOWN CAPABILITIES.

WIRE TAG #	CONDUIT	WIRE QTY (CARRY CURRENT)	WIRE GAUGE (AWG)	WIRE TYPE	WIRE LENGTH (FEET)	TEMP RATING:	WIRE LOCATION	ADJUSTED WIRE TEMP	WIRE AMP		TEMP CORRECTION PER TABLE 310.15(B)(2)(a):		CONDUIT FILL PER Table 310.15(B)(3)(a):		WIRE OCP:	TERMINAL 75oC RATING	INVERTER QTY:		AC OUTPUT CURRENT		CEC 690.8(A)		STRING AMPS	GROUND SIZE	GROUND TYPE	OCPD CHECK
1	NONE	2	12	ENPHASE Q CABLE	15	90°C	ROOF	30	30	X	1	X	1	=	30	25	9	X	1.35	X	1.25	=	15.19	#6	SBC	NONE
2	3/4" EMT	4	10	THWN-2	80	90°C	ROOF	30	40	X	1	X	0.8	=	32	35	9	X	1.35	X	1.25	=	15.19	#8	THWN-2	20A 2P
																	9	X	1.35	X	1.25	=	15.19	#8	THWN-2	20A 2P
3	3/4" EMT	3	8	THWN-2	5	90°C	WALL	30	55	X	1	X	1	=	55	50	18	X	1.35	X	1.25	=	30.38	#8	THWN-2	40A 2P

FIXED ENERGY
dba FORME SOLAR ELECTRIC
1211 E. LA HABRA BLVD., SUITE A
LA HABRA, CA 90631
PHONE NO.: (714) 694-2052
LICENSE #1066257, C10

Solar Photovoltaic System

CHRISTA PAJELA
323 EAST BIXBY ROAD
LONG BEACH, CA 90807

DATE:	11/16/2022	-	-

ISSUED FOR: PERMIT