Regional Planning approval

EARTH WORK

Cut: 63 Cubic Yard

Fill: 115 Cubic Yard

Import Dirt: 52 Cubic Yard

Over-Ex: 495 Cubic Yard

NOTES:
DROUGHT TOLERANT LANDSCAPING AND TURF AREA. POST-CONSTRUCTION LANDSCAPE DESIGNS SHALL COMPLY WITH ALL OF THE FOLLOWING (TITLE 31, SECTION 4, 106.5 :

a. TURF AREAS SHALL NOT EXCEED 25 PERCENT OF THE TOTAL LANDSCAPE AREA.
b. NONINVASIVE DROUGHT TOLERANT PLANT AND TREE SPECIES APPROPRIATE FOR THE CLIMATE ZONE REGION SHALL BE UTILIZED IN AT LEAST 75 PERCENT OF THE TOTAL LANDSCAPED AREA. A LIST OF DROUGHT TOLERANT PLANTS MAY BE OBTAINED AT http://planning.lacounty.gov/green.

P L A N T I N G L E G E N D:

SYMBOL:	BOTANICAL NAME:	COMMON NAME:	SIZE:	QUANTITY
TREES				
T-1	VELVET ASH	FRAXINUS VELUTINA	15 GAL.	2
T-2	QUERCUS AGRIFOLIA	COAST LIVE OAKS	15 GAL.	2
SHRUBS:				
S-1	PRUNUS ILICIFOLIA	HOLLYLEAF CHERRY	5 - GAL	16
GROUND COVERS: G-C	NATIVE WILD FLOWER SEED MIX THOMPSON'		AT 4" O/C TRIANGULARY SPACED FROM FLATS	

P L A N T I N G NOTES / INSTRUCTIONS:

GRAVEL
Gravel shall "gravel thin layer 1/4-1/2-in. thick".
A thin layer is protective of seeds

OAKS:

G-C under oaks also.

Gravel Notes: "gravel thin layer 1/4-1/2-in. thick"
"Allow oak leaves to accumulate under oaks 6-in. deep."
Oak irrigation:
Show soaker hoses circling 2 oaks at 6-ft. out from the trunks.
"Oak irrigation: Irrigate with soaker hoses to 6-in. depth moisture once a month until established, 2-3 years. .
A metal rod will be easily pushed into the ground the depth of the moisture.
After 2-3 years, no water should be used on oak soak hose circles at all except once or twice in summer during severe drought."

USE SUSTAINABLE METHODS

Specify "Do NOT use herbicides, fertilizer, rodenticide, other chemicals.
"Instead, for rodent control use trapping or fumigation.
"For weeds, use hand pulling, including roots, and throw the weeds in the trash."
Chemicals kill native plants. Native plants get nutrients from other plants (legumes) and animals and plants in the soil.

WILDFLOWER SEED MIX:

Seed Mix Notes.
The Thompson seed mixes have some seeds considered invasive—so these need to be avoided.
Planting invasive plants is not allowed according to code.
Use seed mix from a California native seed mix company, S&S.

ADD THESE TO EVERY MIX:
Acmispon glaber "Deerweed" (listed under Lotus scoparius) – 1.5-ft. height
Acmispon strigosus "Hairy lotus" (listed under Lotus strigosus-low height)
Eriophyllum confertiflorum "Golden Yarrow"-1.5-ft. height
Lupinus succulentus "Arroyo lupine"- 3-ft. height
Vulpia microstachys "Small fescue grass"-low height

SEED MIXES –
S&S California Coastal Native Wildflower Mix
Collinsia heterophylla(chinese houses)

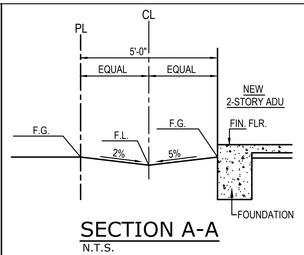

SECTION A-A
N.T.S.

PHOTOVOLTAIC SYSTEM NOTE:
THE PHOTOVOLTAIC SYSTEM WILL BE UNDER A SEPARATE PERMIT AND PLAN CHECK, AND BE SIZED PER THE TITLE 24 ENERGY REPORT ON THIS PERMIT.

WORKERS COMPENSATION NOTE:
A CERTIFICATE OF WORKERS' COMPENSATION INSURANCE MUST BE PRESENTED TO THE LOCAL BUILDING AND SAFETY DIVISION OFFICE BEFORE THE PERMIT CAN BE ISSUED.

PROJECT TEAM

DRAFTING & TITLE 24	G.P.FOX DRAFTING 8050 E. FLORENCE AVE. SUITE # 27 DOWNEY, CA. 90240 gpfoxdesign@verizon.net	(562) 928-5467
STRUCTURAL ENGINEER	MARTIN SANDOVAL P.E. 8050 E. FLORENCE AVE. SUITE # 27 DOWNEY, CA. 90240	

PROJECT MANAGER FOR THIS PROJECT: Wilfrido Rodriguez (562)314-5500

PROJECT INFORMATION

Lot Area: 5,945 sq. ft.
Construction Type V-b
ZONING: LCR2YY

Floor areas:

Proposed 2-Story SFD 2,331 sq. ft.
# of stories = 2
First Floor: 1,014 s.f.
Second Floor: 1,374 s.f.
Minus Stairs: -57 s.f.
Total Floor Area for Main House: 2,331 s.f.
Height of structure 26'-7" from grade @ Main House
Porch 28 s.f.
Proposed 2-Car Garage 342 s.f.

Proposed 2-Story ADU (REAR) 1,171 sq. ft.
# of stories = 2
First Floor = 487.4 s.f.
Second Floor = 683.9 s.f.
Total Floor Area for ADU= 1,171 s.f.
Height of structure 25'-3" from grade @ ADU
Proposed 1-Car Garage : 227.5 s.f.

APPLICABLE CODES

2023 L.A. COUNTY RESIDENTIAL CODE
2023 L.A.COUNTY BUILDING CODE (STRUCTURAL ONLY)
2022 L.A.COUNTY ELECTRICAL CODE
2023 L.A.COUNTY MECHANICAL CODE
2023 L.A.CONTY PLUMBING CODE
2023 CALIFORNIA ENERGY CODE
2023 COUNTY OF LOS ANGELES FIRE CODE

SHEET INDEX

1	-PLOT PLAN
1.1	-RETAINING WALL PLAN
1-LID	-LID PLAN
1-1	-ENERGY REQUIREMENTS
1-2	-GREEN BUILDING NOTES
1-3	-AGE-IN-PLACE
2	-FLOOR PLAN (S.F.D.)
3	-ELEVATIONS (S.F.D.)
SN1	- STRUCTURAL NOTES (S.F.D & A.D.U)
5	- SECTIONS & ROOF PLAN (S.F.D)
6	- FOUNDATION PLAN (S.F.D)
7	- FRAMING PLANS (S.F.D)
8	- FLOOR PLANS (A.D.U)
9	- ELEVATIONS (A.D.U)
10	- SECTIONS & ROOF PLAN (A.D.U)
11	- FOUNDATION PLAN (A.D.U)
12	- FRAMING PLANS (A.D.U)
SD	- STRUCTURAL DETAILS
SD2	- STRUCTURAL DETAILS
SD3	- STRUCTURAL DETAILS
HFX-1	- HARDY FRAME DETAILS
HFX-2	- HARDY FRAME DETAILS
18	- MAIN HOUSE ENERGY FORMS
19	- ADU ENERGY FORMS
GN	- GENERAL NOTES

LEGAL DESCRIPTION

TRACT # :10451 E 40FT OF
LOT: 87
A.P.N. : 8031-007-019

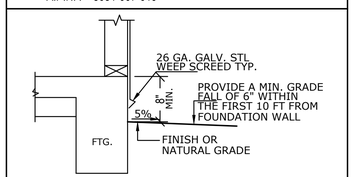

TYP. FOOTING DETAIL - B

FIRE DEPT. NOTES

APPROVED BUILDING ADDRESS NUMBERS, BUILDING NUMBERS OR APPROVED BUILDING IDENTIFICATION SHALL BE PROVIDED AND MAINTAINED SO AS TO BE PLAINLY VISIBLE AND LEGIBLE FROM THE STREET FRONTING THE PROPERTY. THE NUMBERS SHALL CONTRAST WITH THEIR BACKGROUND, BE ARABIC NUMERALS OR ALPHABET LETTERS, AND BE A MINIMUM OF 4 INCHES HIGH WITH A MINIMUM STROKE WIDTH OF 0.5 INCH. FIRE CODE 505.1

THE REQUIRED FIRE FLOW FOR FIRE HYDRANTS AT THIS LOCATION IS 1,750 GPM, AT 20 PSI RESIDUAL PRESSURE, FOR A DURATION OF 2 HOURS OVER AND ABOVE MAXIMUM DAILY DOMESTIC DEMAND. FIRE CODE 507.3 AND APPENDIX B.

THE REQUIRED FIRE FLOW IS BASED ON THE FOLLOWING CALCULATION:

TYPE OF CONSTRUCTION PER THE BUILDING CODE:	TYPE VB
FIRE FLOW CALCULATION AREA	AREA 3,594 SQ. FT.
FIRE FLOW BASED ON THE FIRE-FLOW CALCULATION AREA	1,750 gpm
REDUCTION FOR FIRE SPRINKLERS (MAXIMUM 50% NO LESS THAN 1,500 gpm):	0 gpm
TOTAL FIRE FLOW REQUIRED:	1,750 gpm

ALL FIRE HYDRANTS SHALL MEASURE 6"X4"X2-1/2", BRASS OR BRONZE, CONFORMING TO AMERICAN WATER WORKS ASSOCIATION STANDARD C503, OR APPROVED EQUAL, AND SHALL BE INSTALLED IN ACCORDANCE WITH THE COUNTY OF LOS ANGELES FIRE DEPARTMENT.

FIRE SPRINKLERS NOTE:
An automatic residential fire sprinkler system in accordance with NFDA 13D or section R313.3 shall be installed in one and two family Dwellings including attached garages.

Landscape Requirements

* 100% OF LANDSCAPE TO BE DROUGHT-TOLERANT
(SEE " PLANTING LEGEND")

LID TABLE Exhibit 2

1 LANDSCAPE & IRRIGATION

TREES :PLANT (2) DROUGHT TOLERANT TREES NEAR IMPERVIOUS SURFACES (10' MAX. DISTANCE). AND FOLLOW INSTRUCTIONS PERTINENT TO THE SPECIFIED SPECIES.
DROUGHT TOLERANT TREES: VELVET ASH (FRAXINUS VELUTINA)
(SEE PLAN)
TREES WILL BE MAINTAINED AND INSPECTED ON A REGULAR BASIS WITH THE CARE OF MULCHING, FERTILIZING, AND PRUNING. THESE INSPECTIONS CAN DETECT EARLY DEFECT OF TREES AND CORRECT THE DEFECT BEFORE THEY BECOME DAMAGING THE TREES.

SMART IRRIGATION: RAIN BIRD ESP-SMT4 MANAGER WEATHER-SMART CONTROLLER, RAIN BIRD WRC
NOTE: A SMART IRRIGATION CONTROLLER WILL BE INSTALLED FOR ALL LANDSCAPING THIS REQUIREMENT WILL BE CHECKED BY OUR DEPARTMENT.

a. CONTROLLERS SHALL BE WEATHER OR SOIL MOISTURE BASED CONTROLLERS THAT AUTOMATICALLY ADJUST IRRIGATION IN RESPONSE TO CHANGES IN PLANTS' NEED AS WEATHER CONDICIONS CHANGE.
b. WEATHER BASED CONTROLLERS WITHOUT INTEGRAL RAIN SENSORS OR COMMUNICATION SYSTEMS THAT ACCOUNT FOR LOCAL RAINFALL SHALL HAVE A SEPARATE WIRED OR WIRELESS RAIN SENSOR WHICH CONNNECTS OR COMMUNICATES WITH THE CONTROLLER(S). SOIL MOISTURE BASED CONTROLLERS ARE NOT REQUIRED TO HAVE RAIN SENSOR INPUT.

c. PROPER MAINTENANCE OF SMART IRRIGATION SYSTEM IS AN IMPORTANT PART OF AN EFFICIENT SYSTEM. ALL SYSTEMS SHOULD BE MAINTAINED PER MANUFACTURE'S SPECIFICATIONS.

2 BARRELLS: 17" WIDE 130 GAL. BUSMAN RAIN TANK

DRAINAGE NOTES:
* PROVISIONS SHALL BE MADE FOR CONTRIBUTORY DRAINAGE AT ALL TIMES
* OWNER WILL MAINTAIN DRAINAGE DEVICES AND KEEP FREE OF DEBRIS.
* AN EXCAVATION/ENCROACHMENT PERMIT IS REQUIRED FOR CONSTRUCTION AND/OR DISCHARGE OF DRAINAGE WITHIN PUBLIC ROAD R/W (COUNTY OF LOS ANGELES CONSTRUCTION DIVISION)
* NO WORK IS ALLOWED WITHIN THE PROTECTED ZONE OF OAK TREE WITHOUT AN OAK TREE REPORT AND PERMIT.
* FINISH FLOOR SHALL BE 8 INCHES MINIMUM ABOVE FINISHED GRADE.
* TOTAL PROPOSED LANDSCAPE AREA = 498 SQ. FT.
* TOTAL TURF AREA 25% (PERCENT OF TOTAL PROPOSED LANDSCAPING)
* TOTAL DROUGHT TOLERANT LANDSCAPING AREA 75% (PERCENT OF TOTAL
* HYDROZONING IRRIGATION TECHNIQUES SHALL BE INCORPORATED INTO THE LANDSCAPE DESING. PROPOSED LANDSCAPING)

BUILDING AND SAFETY DIVISION
Department of Public Works
APPROVED
UNDER LOS ANGELES COUNTY CODE
TITLES 26, 30 AND 31
DMCombs
PUBLIC WORKS
04/08/2026 11:18:30 AM
This set of plans and specifications must be kept at the job site at all times and it is unlawful to make any changes, modifications or alterations to these plans or specifications without the prior written permission of the Building Official. The stamping of this set of plans and specifications shall NOT, under any circumstances, be deemed to permit or to be an approval of any work or activity that violates any provisions of any County Ordinance or State Law

AS CIVIL ENGINEER /LAND SURVEYOR OF THIS PROJECT. I HAVE IDENTIFIED THE LOCATION OF ALL EASEMENTS WHICH ARE DEPICTED ON THESE PLANS. I HAVE REVIEWED THE EASEMENTS DOCUMENTS AND VERIFIED THEIR PROPOSED CONSTRUCTION DOES NOT CONFLICT OR INTERFERE WITH THE INTENDED EASEMENT USE.

CIVIL ENGINEER/LAND SURVEYOR (STAMP AND SIGNATURE) DATE

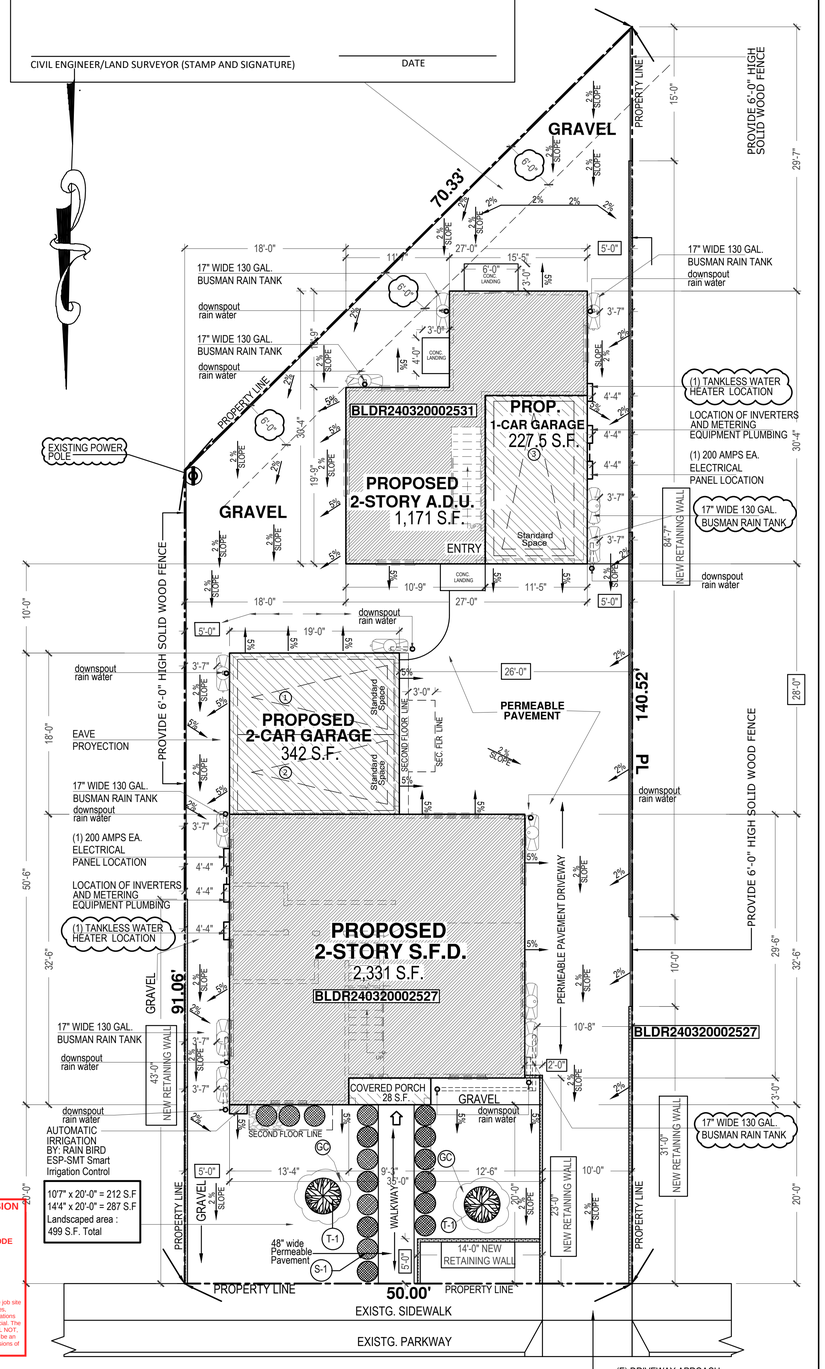

This Permit does not include Mechanical, Electrical nor Plumbing Plan Check Review.

HERS Field Verification Required

The Grading plans approved under GRAD210907000415 are included in the pages as reference for grade elevations and drainage. C-1 - C-3

CREWE STREET See Sht C-2 for site elevations

PLOT PLAN
SCALE 1/8"=1'-0"

REVISIONS	BY
03/19/2024	G.P.
2/25/2026	C.L.

Plans drawn by:
G P. FOX DRAFTING INC.
RESIDENTIAL DRAFTING
8050 E. FLORENCE AVE, SUITE.27
DOWNEY, CA 90240
(562) 928-5467
email: gpfoxdesign@verizon.net

GENERAL NOTES

1. VERIFY MEASUREMENTS WITH CORRESPONDING CONSTRUCTED OR EXISTING CONDITIONS PRIOR TO PROCEEDING WITH THE WORK, AND NOTIFY THE DRAFTSMAN IMMEDIATELY OF SIGNIFICANT DISCREPANCIES.
2. FINISH ELEVATIONS REFERENCED ON THE DRAWNGS ARE DATUM ELEVATIONS ABOVE THE FINISH FLOOR ELEVATION. THE CONTRACTOR MUST COORDINATE DATUM-BASED ELEVATIONS SHOWN WITH SITE-SPECIFIC ELEVATIONS SHOWN ON CIVIL DRAWINGS.
3. WALL DIMENSIONS SHOWN ARE TO FACE OF WALL FINISH UNLESS SPECIFICALLY NOTED OTHERWISE.

Project:
PROPOSED
NEW 2-STORY S.F.D.
AND AN ADU

Sheet Title:
PLOT PLAN

Project for:
SALVADOR POLINA

Project:
Address:
13828, 13828 1/2 CREWE ST
WHITTIER , CA.90605

Checked	G.P.
Job no.	----
Drawn	J.P.M.
Date	03/19/2024

SHEET: 1
OF SHEETS

GENERAL NOTES

ALL WORK SHALL BE EXECUTED IN ACCORDANCE WITH THE BEST STANDARDS AND PRACTICES OF THE TRADE.
A. THE CONTRACTOR SHALL BE RESPONSIBLE FOR COORDINATING THE WORK OF ALL TRADES.
B. THE TERM "CONTRACTOR' AS USED HEREIN AND ON THE DRAWINGS SHALL ALSO BE APPLICABLE TO EACH SUBCONTRACTOR AS REQUIREMENTS PERTAIN TO HIS TRADE.

ALL WORK SHALL BE IN CONFORMANCE WITH ALL APPLICABLE CODES NOTED PLUS
A. STATE OF CALIFORNIA, TITLE 24, ENERGY REGULATIONS.
B. THE CONTRACTOR IS TO SECURE SEPARATE PERMITS FOR ELECTRICAL, MECHANICAL AND PLUMBING PORTIONS OF THE WORK.

BEFORE COMMENCING WORK OR PROCEEDING WITH ERECTION AND SHOP DRAWINGS, EACH SUBCONTRACTOR SHALL VERIFY MEASUREMENTS, LINES GRADES, LOCATIONS AND DETAILS OF EXISTING FIELD CONDITIONS AND NOTIFY THE ARCHITECT OF ANY DISCREPANCIES. START OF THE WORK BY ANY SUBCONTRACTOR DENOTES THAT THE UNDERSURFACE HAS BE INSPECTED AND IS APPROVED BY THE SUBCONTRACTOR.

PROTECT THE PUBLIC FROM INJURY AND PROTECT PUBLIC AND PRIVATE PROPERTY FROM DAMAGE. DAMAGED AREAS SHALL BE REPLACED TO LIKE NEW CONDITION.

SUPLLY ALL BONDS NECESSARY AND REQUIRED BY THE CITY FOR FOR A CONTRACTOR TO WORK WITHIN THE CITY LIMITS.

THE CONTRACTOR SHALL REPLACE ANT DEFECTIVE MATERIALS AND CORRECT ANY POOR WORKMANSHIP AT NO ADDITIONAL COST TO THE OWNER, AND SHALL REMEDY ANY DEFECTS IN MATERIALS OR WORKMANSHIP WHICH APPEAR WITHIN A ONE YEAR PERIOD FROM THE DATE OF COMPLETION AND ACCEPTANCE OF THE WORK.

THE CONTRACTOR IS TO COORDINATE WITH PROPERTY MANAGEMENT REGARDING WORK HOURS, DUMPSTER LOCATION, THE USE OF THE SERVICE ELEVATOR FOR HAULING MATERIALS, AND THE USE OF WATER, PARKING, TELEPHONE, POWER AND TOILET, FOR CONSTRUCTION WORKERS AT THE SITE.

THE CONTRACTOR SHALL KEEP THE PREMISES CLEAN AND FREE FROM ACCUMULATION OF WASTE MATERIALS DEBRIS, AND AT THE END OF THE JOB SHALL REMOVE ALL RUBBISH, SURPLUS MATERIALS, TOOLS AND LEAVE THE BUILDING CLEAN. BESIDES GENERAL CLEANING, MAKE THE CONSTRUCTION AREA READY FOR OCCUPANCY. FOLLOWING ARE ITEMS REQUIRING ATTENTION (THIS LIST DOES NOT REPRESENT THE LIMITS OF THE WORK)
A. REMOVE ALL PUTTY STAINS AND PAINT SPLATTERS FROM GLASS AND MIRRORS, WASH AND POLISH SAME, INSIDE AND OUT. EXERCISE CARE NOT TO SCRATCH THE GLASS.
B. REMOVE MARKS, STAINS, FINGERPRINTS AND OTHER SOIL OR DIRT FROM DECORATED OR STAINED WORK
C. CLEAN AND POLISH HARDWARE FOR ALL TRADES. THIS SHALL INCLUDE REMOVAL OF STAINS, DUST, DIRT. PAINT AND THE LIKE.
D. CLEAN FIXTURES AND EQUIPMENT. REMOVE STAINS, PAINT, DIRT AND DUST.
E. REMOVE TEMPORARY FLOOR PROTECTION AND CLEAN FLOORS.
F. CLEAN INTERIOR AND EXTERIOR METAL SURFACES, INCLUDING DOORS AND WINDOWS REQUIRED TO HAVE POLISHED FINISHES OR OIL, STAINS, DUST, DIRT, PAINT AND THE LIKE. POLISH AND LEAVE WITHOUT FINGER MARKS OR OTHER BLEMISHES.
G. UPON COMPLETION OF THE WORK, THE CONTRACTOR SHALL ACCEPT FULL RESPONSIBILITY FOR MAKING CERTAIN THAT ALL EXPOSED FINISHED SURFACES ARE NEAT, CLEAN AND THOROUGHLY PRESENTABLE CONDITION, AS DETERMINED BY THE DESIGNER, REGARDLESS OF WHETHER OR NOT ANY SUBCONTRACTOR MAY HAVE BEEN REQUIRED BY THE SPECIFICATIONS TO CLEAN THEIR PORTION OF THE WORK WHILE STILL ON THE JOB.

SUBSTITUTIONS SHALL BE SUBMITTED FOR APPROVAL OF THE DESIGNER BY THE CONTRACTOR. ITEMS TO BE SUBMITTED SHALL BE MARKED AND LEFT FOR EXAMINATION.

MATERIALS AND PRODUCTS SHALL BE DELIVERED TO THE BUILDING SITE IN ORIGINAL PACKAGES. MATERIALS AND PRODUCTS SHALL BE STORED OFF THE GROUND ON WOOD BLOCKING IN AN UPRIGHT POSITION, PROTECTED FROM THE ELEMENTS AND IN A MANNER TO PREVENT MARRING.

THE CONTRACTOR MUST CONFORM TO AND COORDINATE WITH FACILITY REQUIREMENTS REGARDING TIMES WHEN UTILITIES/SERVICES WILL BE INTERRUPTED DURING CONSTRUCTION SUCH INTERRUPTION TO OPERATIONS SHALL BE MINIMIZED TO THE EXTENT POSSIBLE.

INSTALL ALL MANUFACTURED ITEMS, MATERIALS AND EQUIPMENT IN STRICT ACCORDANCE WITH THE MANUFACTURE'S SPECIFICATIONS.

ALL WORK NOTED N. I. C. OR NOT IN CONTRACT IS TO BE PERFORMED UNDER ANOTHER CONTRACT. THE CONTRACTOR SHALL COORDINATE N. I. C. WORK WITH THE TRADES EXICUTING RELATED WORK UNDER HIS CONTRACT. FOR THIS COORDINATION SHALL BE FAIRLY COMPENSATED.

ALL WORK PERFORMED BY THE CONTRACTOR SHALL CONFORM TO THE EXISTING BUILDING STANDARDS.

THE CONTRACTOR SHALL SUBMIT ONE REPRODUCABLE SET OF SHOP DRAWINGS FOR EACH ITEM REQUIRING SHOP DRAWING REVIEW. SHOP DRAWINGS SHOULD INCLUDE DETAILED FABRICATION, SETTING AND ERECTION DRAWINGS DIAGRAMETIC DRAWINGS AND MATERIAL SCHEDULES. LOCATION AND ORIENTATION OF ALL ITEMS SHALL BE CLEARLY DELINEATED ON SHOP DRAWINGS. SHOP DRAWINGS WILL TYPICALLY BE PROVIDED (BUT NOT LIMITED TO) STONEWORK, MILLWORK, MISCELLANEOUS METAL, DOORS AND FRAMES, HARDWARE AND EQUIPMENT.

ALL VERTICAL DIMENSIONS SHOWN TO THE FINISHED FLOOR ARE TO THE TOP OF SLAB UNLESS NOTED OTHERWISE.

DO NOT SCALE THE DRAWINGS. LARGE SCALE DETAILS HAVE PRIORITY OVER THOSE AT SMALLER SCALE.

'ALIGN' AS USED IN THIS DOCUMENT SHALL MEAN TO EXACTLY LOCATE CONTIGUOS FINISH MATERIALS IN THE SAME PLANE.

'TYPICAL' AS USED IN THIS DOCUMENT SHALL MEAN THAT THE CONDITION IS THE SAME AS OR SIMILAR TO CONDITIONS THROUGHOUT.

THE CONTRACTOR SHALL UPON COMPLETION OF THE PROJECT PROVIDE REPRODUCABLE DOCUMENTS OF THE PROJECT INCORPORATING ANY CHANGES FROM THE PERMITTED SET TO THE DESIGNER WITH ALL GUARANTEES, WARRANTIES AND OPERATING MANUALS.

PROJECT TEAM

DRAFTING & TITLE 24	G.P.FOX DRAFTING 8050 E. FLORENCE AVE. SUITE # 27 DOWNEY, CA. 90240 gpfoxdesign@verizon.net	(562) 928-5467
STRUCTURAL ENGINEER	PABLO B. SANCHEZ 8050 E. FLORENCE AVE. SUITE # 27 DOWNEY, CA. 90240	(310) 968-1552

PROJECT INFORMATION

Lot Area: 5,945 sq. ft.
Construction Type V-b
ZONING: LCR2YY

Proposed Retaining Walls
Height Varies see plan

APPLICABLE CODES

2020 L.A. COUNTY RESIDENTIAL CODE
2020 L.A.COUNTY BUILDING CODE (STRUCTURAL ONLY)
2020 L.A.COUNTY ELECTRICAL CODE
2020 L.A.COUNTY MECHANICAL CODE
2020 L.A.CONTY PLUMBING CODE
2019 CALIFORNIA ENERGY CODE
2017 L.A.COUNTY FIRE CODE

LEGAL DESCRIPTION

TRACT # :10451 E 40FT OF
LOT: 87
A.P.N. : 8031-007-019

AS CIVIL ENGINEER /LAND SURVEYOR OF THIS PROJECT. I HAVE IDENTIFIED THE LOCATION OF ALL EASEMENTS WHICH ARE DEPICTED ON THESE PLANS. I HAVE REVIEWED THE EASEMENTS DOCUMENTS AND VERIFIED THEIR PROPOSED CONSTRUCTION DOES NOT CONFLICT OR INTERFERE WITH THE INTENDED EASEMENT USE.

CIVIL ENGINEER/LAND SURVEYOR (STAMP AND SIGNATURE) DATE

WORKERS COMPENSATION NOTE:
A CERTIFICATE OF WORKERS' COMPENSATION INSURANCE MUST BE PRESENTED TO THE LOCAL BUILDING AND SAFETY DIVISION OFFICE BEFORE THE PERMIT CAN BE ISSUED.

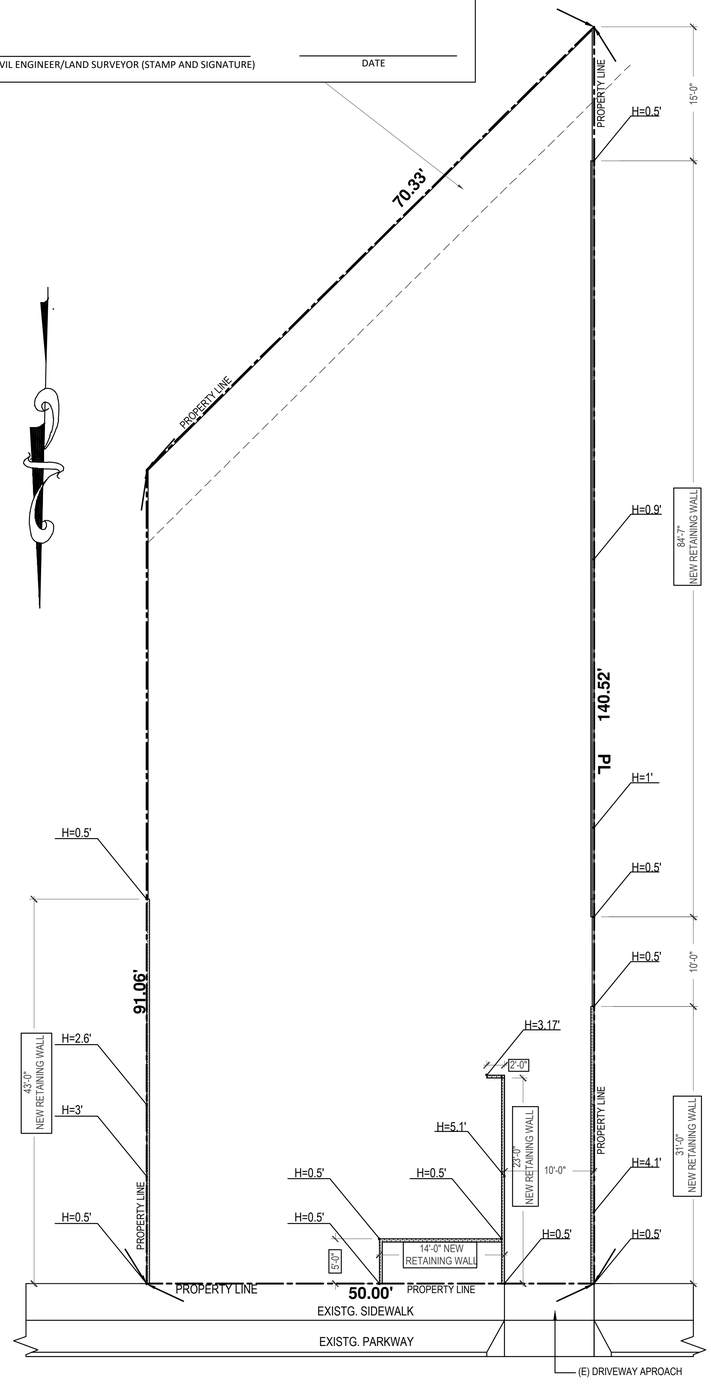

CREWE STREET

RETAINING WALL PLAN
SCALE 1/8"=1'-0"

BUILDING AND SAFETY DIVISION
Department of Public Works
APPROVED
UNDER LOS ANGELES COUNTY CODE
TITLES 26, 30 AND 31
DMcombs
PUBLIC WORKS
04/09/2026 11:18:30 AM
This set of plans and specifications must be kept at the job site at all times and it is unlawful to make any changes, modifications or alterations to these plans or specifications without the prior written permission of the Building Official. The stamping of this set of plans and specifications SHALL NOT, under any circumstances, be deemed to permit or to be an approval of any work or activity that violates any provisions of any County Ordinance or State Law

REVISIONS	BY
2/25/2026	C.L.

Plans drawn by:
G P. FOX DRAFTING INC.
RESIDENTIAL DRAFTING
8050 E. FLORENCE AVE, SUITE.27
DOWNEY, CA 90240
(562) 928-5467
email: gpfoxdesign@verizon.net

GENERAL NOTES

1. VERIFY MEASUREMENTS WITH CORRESPONDING COSTRUCTED OR EXISTING CONDITIONS PRIOR TO PROCEEDING WITH THE WORK, AND NOTIFY THE DRAFTSMAN IMMEDIATELY OF SIGNIFICANT DISCREPANCIES.
2. FINISH ELEVATIONS REFERENCED ON THE DRAWNGS ARE DATUM ELEVATIONS ABOVE THE FINISH FLOOR ELEVATION. THE CONTRACTOR MUST COORDINATE DATUM-BASED ELEVATIONS SHOWN WITH SITE-SPECIFIC ELEVATIONS SHOWN ON CIVIL DRAWINGS.
3. WALL DIMENSIONS SHOWN ARE TO FACE OF WALL FINISH UNLESS SPECIFICALLY NOTED OTHERWISE.

Project:
PROPOSED RETAINING WALLS

Sheet Title:
RETAINING WALL PLAN

Project for:
SALVADOR POLINA

Project:
Address:
13828, 13828 1/2 CREWE ST
WHITTIER , CA.90605

Checked	G.P.
Job no.	----
Drawn	J.P.M.
Date	09/14/2020

SHEET: **1.1**
OF SHEETS

Missing or invalid reference
File: ..\..\..\Documents\BARRELS DETAIL2 130 GAL bushman REV 7-31-23.pdf
Sheet: 1

PLANTING LEGEND:

SYMBOL:	BOTANICAL NAME:	COMMON NAME:	SIZE:	QUANTITY
TREES				
T-1	VELVET ASH	FRAXINUS VELUTINA	15 GAL.	1
T-2	QUERCUS AGRIFOLIA	COAST LIVE OAKS	15 GAL.	2
SHRUBS:				
S-1	PRUNUS ILICIFOLIA	HOLLYLEAF CHERRY	5 - GAL	16
GROUND COVERS:	NATIVE WILD FLOWER SEED MIX		AT 4" O/C TRIANGULARY	
G-C	THOMPSON'		SPACED FROM FLATS	

PLANTING NOTES / INSTRUCTIONS:

GRAVEL
Gravel shall "gravel thin layer 1/4-1/2-in. thick".
A thin layer is protective of seeds

OAKS:

G-C under oaks also.

Gravel Notes: "gravel thin layer 1/4-1/2-in. thick"
"Allow oak leaves to accumulate under oaks 6-in. deep."
Oak irrigation:
Show soaker hoses circling 2 oaks at 6-ft. out from the trunks.
"Oak irrigation: Irrigate with soaker hoses to 6-in. depth moisture once a month until established, 2-3 years. .
A metal rod will be easily pushed into the ground the depth of the moisture.
After 2-3 years, no water should be used on oak soak hose circles at all except once or twice in summer during severe drought."

USE SUSTAINABLE METHODS

Specify "Do NOT use herbicides, fertilizer, rodenticide, other chemicals.
"Instead, for rodent control use trapping or fumigation.
"For weeds, use hand pulling, including roots, and throw the weeds in the trash."
Chemicals kill native plants. Native plants get nutrients from other plants (legumes) and animals and plants in the soil.

WILDFLOWER SEED MIX:

Seed Mix Notes.
The Thompson seed mixes have some seeds considered invasive—so these need to be avoided.
Planting invasive plants is not allowed according to code.
Use seed mix from a California native seed mix company, S&S.

ADD THESE TO EVERY MIX:
Acmispon glaber "Deerweed" (listed under Lotus scoparius) – 1.5-ft. height
Acmispon strigosus "Hairy lotus" (listed under Lotus strigosus-low height)
Eriophyllum confertiflorum "Golden Yarrow"-1.5-ft. height
Lupinus succulentus "Arroyo lupine" - 3-ft. height
Vulpia microstachys "Small fescue grass"-low height

SEED MIXES –
S&S California Coastal Native Wildflower Mix
Collinsia heterophylla(chinese houses)

PLOT PLAN LEGEND

- 2-STORY RES. OR 2-STORY ADU
- PROPOSED PORCH / GARAGE
- PERMEABLE CONCRETE
- GRAVEL
- LANDSCAPE

Landscape Requirements

* 100% OF LANDSCAPE TO BE DROUGHT-TOLERANT
(SEE " PLANTING LEGEND")

NOTES:
DROUGHT TOLERANT LANDSCAPING AND TURF AREA. POST-CONSTRUCTION LANDSCAPE DESIGNS SHALL COMPLY WITH ALL OF THE FOLLOWING (TITLE 31, SECTION 4, 106.5 :
a. TURF AREAS SHALL NOT EXCEED 25 PERCENT OF THE TOTAL LANDSCAPE AREA.
b. NONINVASIVE DROUGHT TOLERANT PLANT AND TREE SPECIES APPROPRIATE FOR THE CLIMATE ZONE REGION SHALL BE UTILIZED IN AT LEAST 75 PERCENT OF THE TOTAL LANDSCAPED AREA. A LIST OF DROUGHT TOLERANT PLANTS MAY BE OBTAINED AT http://planning.lacounty.gov/green.

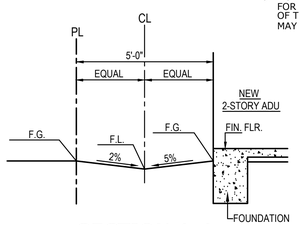

SECTION A-A
N.T.S.

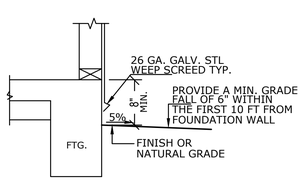

TYP. FOOTING DETAIL - B
N.T.S.

LID TABLE Exhibit 2

1 LANDSCAPE & IRRIGATION

TREES :PLANT (2) DROUGHT TOLERANT TREES NEAR IMPERVIOUS SURFACES (10' MAX. DISTANCE). AND FOLLOW INSTRUCTIONS PERTINENT TO THE SPECIFIED SPECIES.
DROUGHT TOLERANT TREES: PISTACIA CHINENSIS(CHINESE PISTACHE)
(SEE PLAN)
TREES WILL BE MAINTAINED AND INSPECTED ON A REGULAR BASIS WITH THE CARE OF MULCHING, FERTILIZING, AND PRUNING. THESE INSPECTIONS CAN DETECT EARLY DEFECT OF TREES AND CORRECT THE DEFECT BEFORE THEY BECOME DAMAGING THE TREES.

SMART IRRIGATION: RAIN BIRD ESP-SMT4 MANAGER WEATHER-SMART CONTROLLER, RAIN BIRD WRC
NOTE: A SMART IRRIGATION CONTROLLER WILL BE INSTALLED FOR ALL LANDSCAPING THIS REQUIREMENT WILL BE CHECKED BY OUR DEPARTMENT.

a. CONTROLLERS SHALL BE WEATHER OR SOIL MOISTURE BASED CONTROLLERS THAT AUTOMATICALLY ADJUST IRRIGATION IN RESPONSE TO CHANGES IN PLANTS' NEED AS WEATHER CONDICIONS CHANGE.
b. WEATHER BASED CONTROLLERS WITHOUT INTEGRAL RAIN SENSORS OR COMMUNICATION SYSTEMS THAT ACCOUNT FOR LOCAL RAINFALL SHALL HAVE A SEPARATE WIRED OR WIRELESS RAIN SENSOR WHICH CONNNECTS OR COMMUNICATES WITH THE CONTROLLER(S). SOIL MOISTURE BASED CONTROLLERS ARE NOT REQUIRED TO HAVE RAIN SENSOR INPUT.

c. PROPER MAINTENANCE OF SMART IRRIGATION SYSTEM IS AN IMPORTANT PART OF AN EFFICIENT SYSTEM. ALL SYSTEMS SHOULD BE MAINTAINED PER MANUFACTURE'S SPECIFICATIONS.

2 BARRELLS: 17" WIDE 130 GAL. BUSMAN RAIN TANK

DRAINAGE NOTES:
* PROVISIONS SHALL BE MADE FOR CONTRIBUTORY DRAINAGE AT ALL TIMES
* OWNER WILL MAINTAIN DRAINAGE DEVICES AND KEEP FREE OF DEBRIS.
* AN EXCAVATION/ENCROACHMENT PERMIT IS REQUIRED FOR CONSTRUCTION AND/OR DISCHARGE OF DRAINAGE WITHIN PUBLIC ROAD R/W (COUNTY OF LOS ANGELES CONSTRUCTION DIVISION)
* NO WORK IS ALLOWED WITHIN THE PROTECTED ZONE OF OAK TREE WITHOUT AN OAK TREE REPORT AND PERMIT.
* FINISH FLOOR SHALL BE 8 INCHES MINIMUM ABOVE FINISHED GRADE.
* TOTAL PROPOSED LANDSCAPE AREA = 498 SQ. FT.
* TOTAL TURF AREA 25% (PERCENT OF TOTAL PROPOSED LANDSCAPING)
* TOTAL DROUGHT TOLERANT LANDSCAPING AREA 75% (PERCENT OF TOTAL
* HYDROZONING IRRIGATION TECHNIQUES SHALL BE INCORPORATED INTO THE LANDSCAPE DESING.
PROPOSED LANDSCAPING)

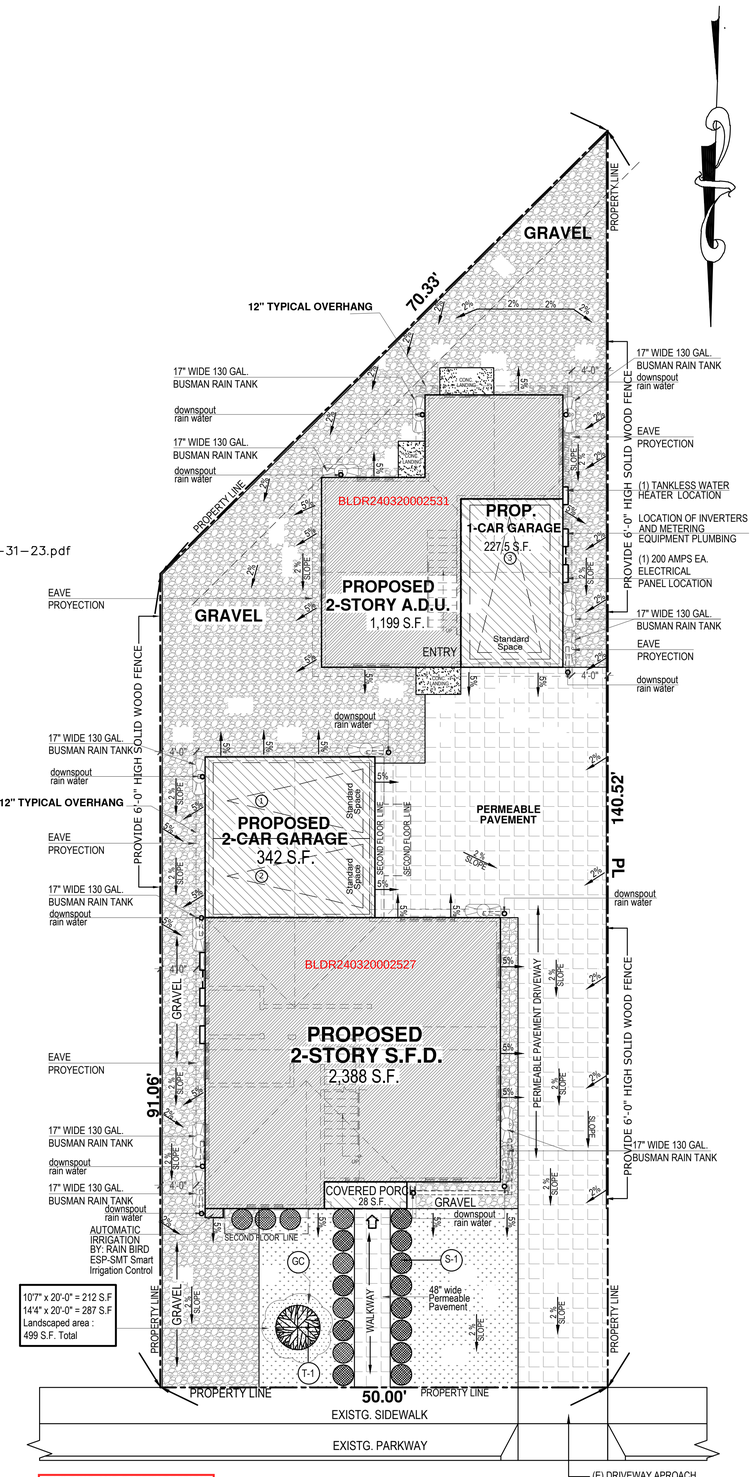

CREWE STREET
PLOT PLAN
SCALE 1/8"=1'-0"

BUILDING AND SAFETY DIVISION
Department of Public Works
APPROVED
UNDER LOS ANGELES COUNTY CODE
TITLES 26, 30 AND 31
DMcCombs
PUBLIC WORKS
04/08/2026 11:18:30 AM
This set of plans and specifications must be kept at the job site at all times and it is unlawful to make any changes, modifications or alterations to these plans or specifications without the prior written permission of the Building Official. The stamping of this set of plans and specifications SHALL NOT, under any circumstances, be deemed to permit or to be an approval of any work or activity that violates any provisions of any County Ordinance or State Law.

REVISIONS	BY

Plans drawn by:

G P. FOX DRAFTING INC.
RESIDENTIAL DRAFTING
8050 E. FLORENCE AVE, SUITE.27
DOWNEY, CA 90240
(562) 928-5467
email: gpfoxdesign@verizon.net

GENERAL NOTES

1. VERIFY MEASUREMENTS WITH CORRESPONDING COSTRUCTED OR EXISTING CONDITIONS PRIOR TO PROCEEDING WITH THE WORK, AND NOTIFY THE DRAFTSMAN IMMEDIATELY OF SIGNIFICANT DISCREPANCIES.
2. FINISH ELEVATIONS REFERENCED ON THE DRAWNGS ARE DATUM ELEVATIONS ABOVE THE FINISH FLOOR ELEVATION. THE CONTRACTOR MUST COORDINATE DATUM-BASED ELEVATIONS SHOWN WITH SITE-SPECIFIC ELEVATIONS SHOWN ON CIVIL DRAWINGS.
3. WALL DIMENSIONS SHOWN ARE TO FACE OF WALL FINISH UNLESS SPECIFICALLY NOTED OTHERWISE.

Project:
PROPOSED NEW 2-STORY S.F.D. AND AN ADU

Sheet Title:
LID PLAN
Low Impact plan

Project for:
SALVADOR POLINA

Project:
Address:
13828, 13828 1/2 CREWE ST
WHITTIER , CA.90605

Checked	G.P.
Job no.	----
Drawn	J.P.M.
Date	03/19/2024

SHEET: **1-lid**
OF SHEETS

ENERGY EFFICIENCY NOTE:

FOR LOW-RISE RESIDENTIAL BUILDINGS (3 STORIES OR LESS), SHOW COMPLIANCE WITH THE 2022 BUILDING ENERGY EFFICIENCY STANDARDS TITLE 24, PART 1, ARTICLE 1, AND PART 6 OF THE CALIFORNIA CODE OF REGULATIONS.

a. LOW-RISE RESIDENTIAL BUILDINGS 3 STORIES OR LESS, SEE ATTACHED CORRECTION SHEET.

B. RESIDENTIAL BUILDINGS 4 STORIES AND MORE, SUBMIT TO THE MECHANICAL SECTION FOR APPROVAL. (4.201.1)

MATERIAL CONSERVATION & RESOURCE EFFICIENCY NOTES:

12. (A) AT THE TIME OF ROUGH INSTALLATION, OR DURING STORAGE ON THE CONSTRUCTION SITE AND UNTIL FINAL STARTUP OF THE HEATING, COOLING, AND VENTILATING EQUIPMENT, ALL DUCT AND OTHER RELATED AIR DISTRIBUTION COMPONENT OPENINGS SHALL BE COVERED WITH TAPE, PLASTIC, SHEET METAL, OR OTHER ACCEPTABLE METHODS TO REDUCE THE AMOUNT OF WATER, DUST, AND DEBRIS WHICH MAY ENTER THE SYSTEM. (4.504.1)

(B) BUILDING MATERIALS WITH VISIBLE SIGNS OF WATER DAMAGE SHALL NOT BE INSTALLED.
WALL AND FLOOR FRAMING SHALL NOT BE ENCLOSED WHEN THE FRAMING MEMBERS EXCEED 19% MOISTURE CONTENT. INSULATION PRODUCTS WHICH ARE VISIBLY WET OR HAVE HIGH MOISTURE CONTENT SHALL BE REPLACED OR ALLOWED TO DRY PRIOR TO ENCLOSURE IN WALL OR FLOOR CAVITIES. (4.505.3)

(C.) LL MECHANICAL EXHAUST FANS IN ROOMS WITH A BATHTUB OR SHOWER SHALL COMPLY WITH THE FOLLOWING:

i. FANS SHALL BE ENERGY STAR COMPLIANT AND BE DUCTED TO TERMINATE OUTSIDE THE BUILDING.

ii. FANS MUST BE CONTROLLED BY A HUMIDITY CONTROL CAPABLE OF ADJUSTMENT BETWEEN A RELATIVE HUMIDITY RANGE OF $50% TO A MAXIMUM OF 80% UNLESS FUNCTIONING AS A COMPONENT OF A WHOLE HOUSE VENTILATION SYSTEM. (4.506.1)

13. VERIFICATION OF COMPLIANCE WITH THESE SECTIONS MUST BE PROVIDED AT THE TIME OF FINAL INSPECTION AND SHALL BE DOCUMENTED ON THE BUILDING OPERATIONS AND MAINTENANCE MANUAL.

a. ADHESIVES, SEALANTS AND CAULKS SHALL MEET OR EXCEED THE STANDARDS OUTLINED IN SECTION 4.504.2.1 AND COMPLY WITH THE VOC LIMITS IN TABLES 4.504.1 AND 4.504.2 AS APPLICABLE. (4.504.2.1)

A. PAINTS AND COATINGS SHALL MEET OR EXCEED THE STANDARDS OUTLINED IN SECTION 4.504.2.2 AND COMPLY WITH THE VOC LIMITS IN TABLE 4.504.3 (4.504.2.2)

C. EROSOL PAINTS AND COATINGS SHALL MEET OR EXCEED THE STANDARDS OUTLINED IN SECTION 4.504.2.3. (4.504.2.3)

d. ALL CARPET INSTALLED IN THE BUILDING INTERIOR SHALL MEET THE TESTING AND PRODUCT REQUIREMENTS OF ONE OF THE FOLLOWING:

I. CARPET AND RUG INSTITUTE'S GREEN LABEL PLUS PROGRAM OR CALIFORNIA DEPARTMENT OF PUBLIC HEALTH STANDARD METHOD FOR THE TESTING OF VOC EMISSIONS (SPEC 01350) OR

iii. NSF/ANSI 140 AT THE GOLD LEVEL OR IV.

SCIENTIFIC CERTIFICATIONS SYSTEMS INDOOR ADVANTAGE GOLD (4.504.3)

e ALL CARPET CUSHION INSTALLED IN THE BUILDING INTERIOR SHALL MEET THE REQUIREMENTS OF THE CARPET AND RUG INSTITUTE GREEN LABEL PROGRAM. CARPET ADHESIVES SHALL NOT EXCEED A VOC LIMIT OF 50 G/L. (4.504.3.1, 4.504.3.2)

f. A MINIMUM OF 80% OF FLOOR AREA RECEIVING RESILIENT FLOORING SHALL COMPLY WITH ONE OR MORE OF THE FOLLOWING:

i. PRODUCTS CERTIFIED AS A LOW-EMITTING MATERIAL IN THE CHPS HIGH PERFORMANCE PRODUCTS DATABASE OR

ii. PRODUCTS CERTIFIED UNDER UL GREENGUARD GOLD (FORMERLY THE GREENGUARD CHILDREN & SCHOOLS PROGRAM), OR

iii. CERTIFICATION UNDER THE RFCI FLOORSCORE PROGRAM OR

iv. MEET THE CALIFORNIA DEPARTMENT OF PUBLIC HEALTH STANDARD METHOD FOR THE TESTING OF VOC EMISSIONS (SPEC 01350) (4.504.4)

g. COMPOSITE WOOD PRODUCTS (HARDWOOD PLYWOOD, PARTICLE BOARD, AND MDF) INSTALLED ON THE INTERIOR OR EXTERIOR OF THE BUILDING SHALL MEET OR EXCEED THE STANDARDS OUTLINED IN TABLE 4.504.5. VERIFICATION OF COMPLIANCE WITH THESE SECTIONS MUST BE PROVIDED AT THE TIME OF INSPECTION. (4.504.5)

MANDATORY MEASURES NOTES:

A) MANUFACTURED FENESTRATION PRODUCTS AND EXTERIOR DOORS SHALL:
1) HAVE A CLEARLY VISIBLE TEMPORARY LABEL MEETING THE REQUIREMENTS OF SEC. 10-111 (A) 1, NOT TO BE REMOVED BEFORE INSPECTION BY THE ENFORCEMENT AGENCY, LISTING THE CERTIFIED U-FACTOR, THE SOLAR HEAT GAINS COEFFICIENT (SHGC), AND VISIBLE TRANSMITTANCE (VT) CERTIFYING THAT THE AIR LEAKAGE REQUIREMENTS OF SEC. 110.6 (A) 1 ARE MET FOR EACH PRODUCT LINE; AND
2) HAVE A PERMANENT LABEL MEETING THE REQUIREMENTS OF SEC. 10-111 (A) 2 IF THE PRODUCT IS RATED USING NFRC PROCEDURES.
SEC. 110.6 (A)

B) FIELD FABRICATED FENESTRATION PRODUCTS OR EXTERIOR DOOR AND THE BUILDING, AND SHALL BE WEATHER STRIPPED. EXCEPTION: UNFRAMED GLASS DOORS AND FIRE DOORS. 110.6 (B)

C) JOINTS, PENETRATIONS AND OTHER OPENINGS IN THE BUILDING ENVELOPE THAT ARE POTENTIAL SOURCES OF AIR LEAKAGE SHALL BE CAULKED, GASKETED, WEATHER STRIPPED, OR OTHERWISE SEALED TO LIMIT INFILTRATION AND EXFILTRATION SEC. 110.7

D) ALL INSULATING MATERIAL SHALL BE INSTALLED IN COMPLIANCE WITH THE FLAMESPREAD RATING AND SMOKE DENSITY REQUIREMENTS OF THE CBC. SEC. 110.8 (C)

E) NO MECHANICAL EQUIPMENT NOR PLUMBING VENTS SHALL BE LOCATED WITHIN THE DESIGNATED "SOLAR ZONE" AREA. SEC 110.10 (B) 1-B
F) ANY ROOFING PRODUCT USED AS A COOL ROOF SHALL BE CERTIFIED AND LABELED IN ACCORDANCE WITH THE REQUIREMENTS OF SEC. 10-113 BY THE COOL ROOF RATING COUNCIL (CRRC) AND MEET CONDITIONS SET IN SEC. 110.8 (I)
G) NEW SPACE CONDITIONING EQUIPMENT SHALL MEET THE APPLICABLE EFFICIENCY REQUIREMENTS OF TABLES 110.2-(A-K). SEC. 110.2 (A)
H) ALL UNITARY SYSTEMS NOT CONTROLLED BY EMCS SHALL HAVE SETBACK THERMOSTATS; CAPABLE TO PROGRAM TEMPERATURE SETPOINTS FOR AT LEAST FOUR PERIODS WITHIN A 24 HR. PERIOD. SEC. 110.2 (2) (C)
I) HEAT PUMPS WITH SUPPLEMENTARY ELECTRIC RESISTANCE HEATERS SHALL HAVE CONTROLS:
1) THAT PREVENT SUPPLEMENTARY HEATER OPERATION WHEN THE HEATING LOAD CAN BE MET BY THE HEAT PUMP ALONE; AND
2) CUT-ON TEMPERATURE FOR COMPRESSION HEATING IS HIGHER THAN CUT-ON TEMPERATURE FOR SUPPLEMENTARY HEATING, CUT-OFF TEMPERATURE FOR COMPRESSION HEATING IS HIGHER THAN THE CUT-OFF TEMPERATURE FOR SUPPLEMENTAL HEATING.

J) INSULATION FOR WATER TANKS (STORAGE TANKS OR BACKUP STORAGE TANKS FOR SOLAR WATER HEATING) AND PIPING (SPACE-CONDITIONING SYSTEMS, SOLAR WATER-HEATING SYSTEM AND DISTRIBUTION HEATING SYSTEM) SHALL MEET THE REQUIREMENT OF SEC 12.3 (a)
K) ALL INSTALLED LUMINARIES SHALL MEET TABLE 150.0-A.
L) ALL FACTORY FABRICATED DUCT SYSTEMS SHALL COMPLY WITH UL 181. THIS INCLUDES ALL DUCTS, AND CLOSURE SYSTEMS SUCH AS COLLARS, CONNECTIONS AND SPLICES. LABELED, COMPLYING TO UL 181.
M) FOR SINGLE FAMILY DWELLINGS AND TOWNHOUSES WITH THE DUCTS CONNECTED DIRECTLY TO THE AIR HANDLER, THE TOTAL LEAKAGE OF THE DUCT SYSTEM SHALL NOT EXCEED 5 PERCENT OF THE NOMINAL SYSTEM AIR HANDLER AIRFLOW AS DETERMINED UTILIZING THE PROCEDURES IN REFERENCE RESIDENTIAL APPENDIX SECTION RA3.1.4.3.1. IF THE SINGLE-FAMILY DWELLINGS AND TOWNHOUSES ARE IN THE "ROUGH-IN STAGE OF CONSTRUCTION" PRIOR TO INSTALLATION AND THE AIR-HANDLING UNIT IS NOT YET INSTALLED THE LEAKAGE SHALL NOT EXCEED 4 PERCENT OF THE AIR-HANDLER SYSTEMS MANUFACTURED LISTED AIRFLOW. SEC 150.0 (m)2
N) ALL AIR DISTRIBUTION SYSTEM DUCTS AND PLENUMS, INCLUDING, BUT NOT LIMITED TO, BUILDING CAVITIES, MECHANICAL CLOSETS, AIR-HANDLER BOXES AND SUPPORT PLATFORMS USED AS DUCTS OR PLENUMS, SHALL BE INSTALLED, SEALED AND INSULATED TO MEET THE REQUIREMENTS OF THE 2019 CALIFORNIA MECHANICAL CODE AND ANSI/SMACNA -006.2006 HVAC DUCT CONSTRUCTION STANDARDS METAL AND FLEXIBLE. SUPPLY-AIR DUCTS CONVEYING HEATED OR COOLED AIR SHALL BE INSULATED TO A MINIMUM INSTALLED LEVEL OF R-4.2 (R-6.0 IN UNCONDITIONED SPACE), UNLESS DUCTS ARE IN CONDITIONED SPACE.
O) ALL DWELLING BUILDINGS SHALL MEET THE REQUIREMENTS OF ASHRAE STANDARD 62.2, VENTILATION AND ACCEPTABLE INDOOR AIR QUALITY IN LOW-RISE RESIDENTIAL BUILDINGS. SEC 150.01(o)
P) THE PIPING FOR ALL SPACE CONDITIONING AND SERVICE WATER HEATING SYSTEMS SHALL BE INSULATED IN ACCORDANCE WITH TABLE 120.3 -A.
Q) SERVICE WATER HEATING SYSTEMS AND EQUIPMENT SHALL MEET THE APPLICABLE REQUIREMENTS OF THE APPLIANCE EFFICIENCY REGULATIONS AS REQUIRED BY SEC. 110.1.
R) SERVICE HOT WATER SYSTEMS WITH CIRCULATING PUMPS OR WITH ELECTRICAL HEAT TRACE SYSTEMS SHALL BE CAPABLE OF AUTOMATICALLY TURNING OFF THE SYSTEM. SEC. 110.3 (C) 2
S) INSTANTANEOUS WATER HEATERS WITH AN INPUT RATING GREATER THAN 6.8 KBTU/HR. (2 KW) SHALL HAVE ISOLATION VALVES ON BOTH THE COLD WATER SUPPLY AND THE HOT WATER PIPE LEAVING THE WATER HEATER. HOSE BIBS OR OTHER FITTINGS SHALL BE INSTALLED ON EACH VALVE FOR FLUSHING THE WATER HEATER WHEN THE VALVES ARE CLOSED. PROVIDE DETAIL.

BUILDING AND SAFETY DIVISION
Department of Public Works
APPROVED
UNDER LOS ANGELES COUNTY CODE
TITLES 25, 30 AND 31
DMcComic
PUBLIC WORKS
04/08/2026 11:18:30 AM
This set of plans and specifications must be kept at the job site at all times and it is unlawful to make any changes, modifications or alterations to these plans or specifications without the prior written permission of the Building Official. The stamping of this set of plans and specifications SHALL NOT, under any circumstances, be deemed to permit or to be an approval of any work or activity that violates any provisions of any County Ordinance or State Law

ENERGY STORAGE SYSTEM NOTES:

178. AT LEAST ONE OF THE FOLLOWING SHALL BE PROVIDED TO DEMONSTRATE COMPLIANCE WITH ENERGY STORAGE SYSTEM READY DWELLINGS. PLEASE DETAIL COMPLIANCE ON PLAN AS SPECIFIED IN CENC SECTION 150.0(S) 1:

A. ESS READY INTERCONNECTION EQUIPMENT WITH A MINIMUM BACKED-UP CAPACITY OF 60 AMPS AND A MINIMUM OF FOUR ESS-SUPPLIED BRANCH CIRCUITS, OR;

B. THE FUTURE LOCATION OF A SYSTEM ISOLATION EQUIPMENT/TRANSFER SWITCH AND ENSURE A CLEAR SPACE BE RESERVED TO ALLOW INSTALLATION WITHIN 3 FEET OF THE MAIN PANELBOARD

179. "A MINIMUM OF FOUR BRANCH CIRCUITS SHALL BE IDENTIFIED AND HAVE THEIR SOURCE OF SUPPLY COLLOCATED AT A SINGLE PANELBOARD SUITABLE TO BE SUPPLIED BY THE ESS.
AT LEAST ONE CIRCUIT SHALL SUPPLY THE REFRIGERATOR, ONE LIGHTING CIRCUIT SHALL BE LOCATED NEAR THE PRIMARY EGRESS AND AT LEAST ONE CIRCUIT SHALL SUPPLY A SLEEPING ROOM RECEPTACLE OUTLET."

180. REVISE THE PLANS TO PROVIDE AN ELECTRICAL PANEL BOARD WITH A MINIMUM BUSBAR RATING OF 225-AMPS. [CENC 150.0(S)3]

181. FOR THE FUTURE ENERGY STORAGE SYSTEM, SUFFICIENT SPACE SHALL BE RESERVED TO ALLOW FUTURE INSTALLATION OF A SYSTEM ISOLATION EQUIPMENT/TRANSFER SWITCH WITHIN 3 FEET OF THE MAIN PANELBOARD. RACEWAYS SHALL BE INSTALLED BETWEEN THE PANELBOARD AND THE SVSTEM ISOLATION EQUIPMENT/TRANSFER SWITCH LOCATION TO ALLOW THE CONNECTION OF BACKUP POWER SOURCE. DEMONSTRATE COMPLIANCE ON PLAN. [CENC 150.0(S)4]

183. SYSTEMS USING GAS OR PROPANE FURNACE TO SERVE INDIVIDUAL DWELLING UNITS SHALL INCLUDE THE FOLLOWING TO BE HEAT PUMP SPACE HEATER READY PER CENC SECTION 150.0(T):

a. A DEDICATED 240 VOLT BRANCH CIRCUIT WIRING SHALL BE INSTALLED WITHIN 3 FEET FROM THE FURNACE AND ACCESSIBLE TO THE FURNACE WITH NO OBSTRUCTIONS. THE BRANCH CIRCUIT CONDUCTORS SHALL BE RATED AT 30 AMPS MINIMUM. THE BLANK COVER SHALL BE IDENTIFIED AS
"240V READY." ALL ELECTRICAL COMPONENTS SHALL BE INSTALLED IN ACCORDANCE WITH THE CALIFORNIA ELECTRICAL CODE.

b. THE MAIN ELECTRICAL SERVICE PANEL SHALL HAVE A RESERVED SPACE TO ALLOW FOR THE INSTALLATION OF A DOUBLE POLE CIRCUIT BREAKER FOR A FUTURE HEAT PUMP SPACE HEATER INSTALLATION. THE RESERVED SPACE SHALL BE PERMANENTLY MARKED AS "FOR FUTURE 240V USE."

184. SYSTEMS USING GAS OR PROPANE COOKTOP TO SERVE INDIVIDUAL DWELLING UNITS SHALL INCLUDE THE FOLLOWING TO BE ELECTRIC COOKTOP READY PER CENC SECTION 150.0(U):

a. A DEDICATED 240 VOLT BRANCH CIRCUIT WIRING SHALL BE INSTALLED WITHIN 3 FEET FROM THE COOKTOP AND ACCESSIBLE TO THE COOKTOP WITH NO OBSTRUCTIONS. THE BRANCH CIRCUIT CONDUCTORS SHALL BE RATED AT 50 AMPS MINIMUM. THE BLANK COVER SHALL BE IDENTIFIED AS
"240V READY." ALL ELECTRICAL COMPONENTS SHALL BE INSTALLED IN ACCORDANCE WITH THE CALIFORNIA ELECTRICAL CODE.

A. THE MAIN ELECTRICAL SERVICE PANEL SHALL HAVE A RESERVED SPACE TO ALLOW FOR THE INSTALLATION OF A DOUBLE POLE CIRCUIT BREAKER FOR A FUTURE ELECTRIC COOKTOP INSTALLATION. THE RESERVED SPACE SHALL BE PERMANENTLY MARKED AS "FOR FUTURE 240V USE."

185. CLOTHES DRYER LOCATIONS WITH GAS OR PROPANE PLUMBING TO SERVE INDIVIDUAL DWELLING UNITS SHALL INCLUDE THE FOLLOWING TO BE ELECTRIC CLOTHES DRYER READY PER CENC SECTION 150.0(V):

186. A DEDICATED 240 VOLT BRANCH CIRCUIT WIRING SHALL BE INSTALLED WITHIN 3 FEET FROM THE CLOTHES DRYER LOCATION AND ACCESSIBLE TO THE CLOTHES DRYER LOCATION WITH NO OBSTRUCTIONS. THE BRANCH CIRCUIT CONDUCTORS SHALL BE RATED AT 30 AMPS MINIMUM. THE BLANK COVER SHALL BE IDENTIFIED AS "240V READY." ALL ELECTRICAL COMPONENTS SHALL BE INSTALLED IN ACCORDANCE WITH THE CALIFORNIA ELECTRICAL CODE.
THE MAIN ELECTRICAL SERVICE PANEL SHALL HAVE A RESERVED SPACE TO ALLOW FOR THE INSTALLATION OF A DOUBLE POLE CIRCUIT BREAKER FOR A FUTURE ELECTRIC CLOTHES DRYER INSTALLATION. THE RESERVED SPACE SHALL BE PERMANENTLY MARKED AS "FOR FUTURE 240V USE."
86, A LOCAL MECHANICAL EXHAUST SYSTEM SHALL BE INSTALLED IN EACH KITCHEN AND BATHROOM IN ACCORDANCE WITH CENC SECTION 150.0(0)1G. THE FOLLOWING NEEDS SPECIFIC NOTES OR DETAILS ON PLANS TO DEMONSTRATE COMPLIANCE (GENERAL NOTES WILL NOT SUFFICE):

NONENCLOSED KITCHENS SHALL HAVE DEMAND-CONTROLLED MECHANICAL EXHAUST. THE DEMAND-CONTROLLED MECHANICAL EXHAUST SHALL COMPLY WITH SECTION 150.0(O)1 GIII.
ENCLOSED KITCHENS AND BATHROOMS MAY BE PROVIDED WITH EITHER A DEMAND-CONTROLLED EXHAUST OR CONTINUOUS MECHANICAL EXHAUST. SPECIFY WHICH WILL BE PROVIDED ON PLAN.
(84. WHERE DEMAND-CONTROLLED MECHANICAL EXHAUST IS PROVIDED IN THE KITCHEN OR BATHROOMS, USE CENC TABLE

150.0-E AND TABLE 150.0-G TO SIZE THE AIRFLOW RATE.

CLEARLY INDICATE THE REQUIRED AIRFLOW RATE ON THE PLANS BASED ON THE TABLES. GENERAL NOTES WILL NOT SUFFICE TO ADDRESS THIS CODE REQUIREMENT

88. FOR RESIDENTIAL ENERGY WATER HEATING, SYSTEMS USING GAS OR PROPANE WATER HEATERS SHALL DESIGNATE A 2.5-FEET BY

2.5-FEET AND 7-FOOT TALL SPACE SUITABLE FOR THE FUTURE INSTALLATION OF A HEAT PUMP WATER HEATER. CLEARLY DETAIL THE SPACE ON PLAN. ICENC 150.0(N) 11

(89. IF THE DESIGNATED SPACE FOR THE RESIDENTIAL ENERGY WATER HEATING SYSTEM IS WITHIN 3 FEET FROM THE WATER HEATER, THEN THIS SPACE SHALL INCLUDE THE FOLLOWING PER CENC SECTION 150.0(N) 1A:

A DEDICATED 125 VOLT, 20 AMP ELECTRICAL RECEPTACLE THAT IS CONNECTED TO THE ELECTRIC PANEL WITH A 120/240 VOLT 3 CONDUCTOR, 10 AWG COPPER BRANCH CIRCUIT, WITHIN 3 FEET FROM THE WATER HEATER AND ACCESSIBLE TO THE WATER HEATER WITH NO OBSTRUCTIONS; AND
BOTH ENDS OF THE UNUSED CONDUCTOR SHALL BE LABELED WITH THE WORD "SPARE" AND BE ELECTRICALLY ISOLATED; AND
C. A RESERVED SINGLE POLE CIRCUIT BREAKER SPACE IN THE ELECTRICAL PANEL ADJACENT TO THE CIRCUIT BREAKER FOR THE BRANCH CIRCUIT IN A ABOVE AND LABELED WITH THE WORDS "FUTURE 240V USE". AND

b. A CONDENSATE DRAIN THAT IS NO MORE THAN 2 INCHES HIGHER THAN THE BASE OF THE INSTALLED WATER HEATER, AND ALLOWS NATURAL DRAINING WITHOUT PUMP ASSISTANCE

90. IF THE DESIGNATED SPACE FOR THE RESIDENTIAL ENERGY WATER HEATING SYSTEM IS MORE THAN 3 FEET FROM THE WATER HEATER, THEN THIS SPACE SHALL INCLUDE THE FOLLOWING PER CENC SECTION 150.0(N) 1B:

A DEDICATED 240 VOLT BRANCH CIRCUIT SHALL BE INSTALLED WITHIN 3 FEET FROM THE DESIGNATED SPACE. THE BRANCH CIRCUIT SHALL BE RATED AT 30 AMPS MINIMUM. THE BLANK COVER SHALL BE IDENTIFIED AS "240V READY"; AND
THE MAIN ELECTRICAL SERVICE PANEL SHALL HAVE A RESERVED SPACE TO ALLOW FOR THE INSTALLATION OF A DOUBLE POLE CIRCUIT BREAKER FOR A FUTURE HPWH INSTALLATION. THE RESERVED SPACE SHALL BE PERMANENTLY MARKED AS "FOR FUTURE 240V USE"; AND
C.

EITHER A DEDICATED COLD WATER SUPPLY, OR THE COLD WATER SUPPLY SHALL PASS THROUGH THE DESIGNATED HPWH LOCATION JUST BEFORE REACHING THE GAS OR PROPANE WATER HEATER; AND

D.

THE HOT WATER SUPPLY PIPE COMING OUT OF THE GAS OR PROPANE WATER HEATER SHALL BE ROUTED FIRST THROUGH THE DESIGNATED HWH LOCATION BEFORE SERVING ANY FIXTURES; AND

e. THE HOT AND COLD WATER PIPING AT THE DESIGNATED HPWH LOCATION SHALL BE EXPOSED AND READILY ACCESSIBLE FOR FUTURE INSTALLATION OF AN HPWH; AND

F.

A CONDENSATE DRAIN THAT IS NO MORE THAN 2 INCHES HIGHER THAN THE BASE OF THE INSTALLED WATER HEATER, AND ALLOWS NATURAL DRAINING WITHOUT PUMP ASSISTANCE.

REVISIONS	BY

Plans drawn by:
G P. FOX DRAFTING INC.
GUILLERMO PALAFOX
RESIDENTIAL DRAFTING
8050 E. FLORENCE AVE, SUITE.27
DOWNEY, CA 90240
(562) 928-5467
email: gpfoxdesign@verizon.net

GENERAL NOTES

1. VERIFY MEASUREMENTS WITH CORRESPONDING COSTRUCTED OR EXISTING CONDITIONS PRIOR TO PROCEEDING WITH THE WORK, AND NOTIFY THE DRAFTSMAN IMMEDIATELY OF SIGNIFICANT DISCREPANCIES.

2. FINISH ELEVATIONS REFERENCED ON THE DRAWINGS ARE DATUM ELEVATIONS ABOVE THE FINISH FLOOR ELEVATION. THE CONTRACTOR MUST COORDINATE DATUM-BASED ELEVATIONS SHOWN WITH SITE-SPECIFIC ELEVATIONS SHOWN ON CIVIL DRAWINGS.

3. WALL DIMENSIONS SHOWN ARE TO FACE OF WALL FINISH UNLESS SPECIFICALLY NOTED OTHERWISE.

Project:

PROPOSED NEW 2-STORY S.F.D. AND AN ADU

Sheet Title:

ENERGY REQUIREMENTS FOR BOTH BUILDINGS

Project for:

SALVADOR POLINA

Project:
Address:

13828, 13828 1/2 CREWE ST WHITTIER , CA.90605

Checked	G.P.
Job no.	---
Drawn	C.L.
Date	03/19/2024

SHEET:

1-1

OF SHEETS

ADMINISTRATIVE REQUIREMENTS:

A) THE PERSON IN CHARGE OF THE CONSTRUCTION OR INSTALLATION, WHO IS ELIGIBLE UNDER DIVISION 3 OF THE BUSINESS AND PROFESSIONS CODE TO ACCEPT RESPONSIBILITY FOR THE CONSTRUCTION OR INSTALLATION OF REGULATED MANUFACTURED DEVICES SHALL POST, OR MAKE AVAILABLE WITH THE BUILDING PERMIT(S) ISSUED FOR THE BUILDING, THE CERTIFICATE OF INSTALLATION DOCUMENTATION FOR MANUFACTURED DEVICES REGULATED BY THE APPLIANCE EFFICIENCY REGULATIONS OR PART 6. SUCH CERTIFICATE OF INSTALLATION DOCUMENTATION SHALL BE MADE AVAILABLE TO THE ENFORCEMENT AGENCY FOR ALL APPLICABLE INSPECTIONS. THESE CERTIFICATES SHALL:

i) IDENTIFY FEATURES, MATERIALS, COMPONENTS, MANUFACTURED DEVICES, AND SYSTEM DIAGNOSTIC RESULTS REQUIRED TO VERIFY COMPLIANCE WITH THE APPLIANCE EFFICIENCY REGULATIONS AND PART 6.

ii) STATE THE NUMBER OF THE BUILDING PERMIT UNDER WHICH THE CONSTRUCTION OR INSTALLATION WAS PERFORMED. SECTIONS OF THE CERTIFICATE(S), FOR WHICH SUBMITTAL TO A HERS PROVIDER DATA REGISTRY IS REQUIRED, SHALL DISPLAY THE UNIQUE REGISTRATION NUMBER ASSIGNED BY THE HERS DATA REGISTRY.

iii) INCLUDE A DECLARATION STATEMENT INDICATING THAT THE CONSTRUCTED OR INSTALLED FEATURES, MATERIALS, COMPONENTS, OR MANUFACTURED DEVICES CONFORM TO ALL APPLICABLE CODES AND REGULATIONS, AND TO THE REQUIREMENTS FOR SUCH DEVICES GIVEN IN THE PLANS AND SPECIFICATIONS APPROVED BY THE LOCAL ENFORCEMENT AGENCY.

IV) BE SIGNED BY THE DOCUMENTATION AUTHOR TO CERTIFY THE DOCUMENTATION IS ACCURATE AND COMPLETE.

V) BE SIGNED BY THE INDIVIDUAL ELIGIBLE UNDER DIVISION 3 OF THE BUSINESS AND PROFESSIONS CODE TO ACCEPT RESPONSIBILITY FOR CONSTRUCTION, OR INSTALLATION IN THE APPLICABLE CLASSIFICATION FOR THE SCOPE OF WORK SPECIFIED ON THE CERTIFICATE OF INSTALLATION DOCUMENT(S).
SEC. 10-103 (A) 3 A

B) THE BUILDER SHALL PROVIDE THE BUILDING OWNER OR THE PERSON(S) RESPONSIBLE FOR OPERATION AND MAINTENANCE OF THE FEATURE, MATERIAL, COMPONENT OR MECHANICAL DEVICE INSTALLED (IN CASE OF MULTI-TENANT OR CENTRALLY OPERATED BUILDINGS) WITH THE FOLLOWING AT THE TIME OF OCCUPANCY:

i) COMPLIANCE INFORMATION. THE APPROPRIATE COMPLETED AND SIGNED CERTIFICATE(S) OF COMPLIANCE, CERTIFICATE(S) OF INSTALLATION, AND IF APPLICABLE CERTIFICATE(S) OF VERIFICATION DOCUMENTATION SUBMITTED.

ii) OPERATING INFORMATION. THE APPROPRIATE CERTIFICATE(S) OF COMPLIANCE AND A LIST OF THE FEATURES, MATERIALS, COMPONENTS, AND MECHANICAL DEVICES INSTALLED IN THE BUILDING AND INSTRUCTIONS ON HOW TO OPERATE THEM CORRECTLY AND EFFICIENTLY.

ii) MAINTENANCE INFORMATION. REQUIRED ROUTINE MAINTENANCE ACTIONS SHALL BE CLEARLY STATED AND INCORPORATED ON A READILY ACCESSIBLE LABEL. THE LABEL MAY BE LIMITED TO IDENTIFYING THE OPERATION AND MAINTENANCE MANUAL.

iv) VENTILATION INFORMATION. A DESCRIPTION OF THE QUANTITY OF OUTDOOR AIR THAT THE VENTILATION SYSTEM IS DESIGNED TO PROVIDE TO THE BUILDING CONDITIONED SPACE, AND INSTRUCTIONS FOR PROPER OPERATION AND MAINTENANCE. SEC. 10-103 (B)

C) THE ENFORCEMENT AGENCY SHALL NOT ISSUE A CERTIFICATE OF OCCUPANCY UNTIL ALL REQUIRED CERTIFICATES OF VERIFICATION ARE POSTED AND MADE AVAILABLE TO THE BUILDING DEPARTMENT FOR ALL APPLICABLE INSPECTIONS, AND THAT ALL CERTIFICATES OF VERIFICATION CONFORM TO THE SPECIFICATIONS OF SECTION 10-103(A)5.
SEC. 10-103 (D) 2

MANDATORY INSULATION VALUES

	FRAME TYPE METAL			CAVITY INSULATION
	WOOD	METAL	CONCRETE	
CEILING/ROOF	✓			R-38
EXTERIOR WALLS	✓			R-15
	✓			
FLOOR (OVER UNCONDTIONAL	✓			R-19

NOTES:

ALL INTERIOR AND EXTERIOR STAIRWAYS SHALL BE ILLUMINATED (R303.7).

PROVIDE 42" HIGH GUARDS WITH MAXIMUM 4" CLEAR SPACING OPENING BETWEEN RAILS AT WINDOW. (R312.1.2.)

THROUGH PENETRATIONS OF FIRE-RESISTANCE-RATED WALL OR FLOOR ASSEMBLIES SHALL COMPLY WITH SECTION R302.4.1.1 OR R302.4.1.2. PROVIDE DETAIL AND COPY OF LISTING ON THE PLANS. (R302.4.1)

IN COMBUSTIBLE CONSTRUCTION WHERE THERE IS USABLE SPACE BOTH ABOVE AND BELOW THE CONCEALED SPACE OF A FLOOR/ CEILING ASSEMBLY, DRAFTSTOPS SHALL BE INSTALLED SO THAT THE AREA OF THE CONCEALED SPACE DOES NOT EXCEED 1,000 SQUEARE FEET. DRAFTSTOPPING SHALL DIVIDE THE CONCEALED SPACE INTO APPROXIMATELE EQUAL AREA. (R302.12)

AN APPROVED SMOKE ALARMS SHALL BE INSTALLED IN EACH SLEEPING ROOM & HALLWAY OR AREA GIVING ACCESS TO A SLEEPING ROOM, AND ON EACH STORY AND BASEMENT FOR DWELLINGS WITH MORE THAN ONE STORY. SMOKE ALARMS SHALL BE INTERCONNECTED SO THAT ACTUATION OF ONE ALARM WILL ACTIVATE ALL THE ALARMS WITHIN THE INDIVIDUAL DWELLING UNIT. IN NEW CONSTRUCTION SMOKE ALARMS SHALL RECEIVE THEIR PRIMARY POWER SOURCE FROM THE BUILDING WIRING AND SHALL BE EQUIPPED WITH BATTERY BACK UP AND LOW BATTERY SIGNAL. (R314)

AN APPROVED CARBON MONOXIDE ALARM SHALL BE INSTALLED IN DWEELING UNITS AND IN SLEEPING UNITS WITHIN WHICH FUEL-BURNING APPLIANCES ARE INSTALLED AND IN DWELLING UNITS THAT HAVE ATTACHED GARAGES. CARBON MONOXIDE ALARM SHALL BE PROVIDED OUTSIDE OF EACH SEPARATE DWELLING UNIT SLEEPING AREA IN THE IMMEDIATE VICINITY OF THE BEDROOMS(S) AND ON EVERY LEVEL OF A DWELLING UNIT INCLUDING BASEMENTS. (R315)

BATHROOMS, WATER CLOSET COMPARTMENTS AND OTHER SIMILAR ROOMS SHALL BE PROVIDED NATURAL VENTILATION OR WITH MECHANICAL VENTILATION CAPABLE OF 50 cfm EXHAUSTED DIRECTLY TO THE OUTSIDE. (R303.3)

HEATER SHALL BE CAPABLE OF MAINTAINING A MINIMUM ROOM TEMPERATURE OF 68 F AT A POINT 3 FEET ABOVE THE FLOOR AND 2 FEET FROM EXTERIOR WALLS IN ALL HABITABLE ROOMS AT THE DESIGN TEMPERATURE. (R303.8)

EVERY DWELLING UNIT SHALL BE PROVIDED WITH A WATER CLOSET, LAVATORY, BATHTUB OR SHOWER, AND KITCHEN (R306.1 AND R306.2).

COUNTY OF LOS ANGELES
DEPARTMENT OF PUBLIC WORKS
BUILDING AND SAFETY DIVISION

BUILDING OPERATION AND MAINTENANCE MANUAL – 2023 LAGBSC

PLAN CHECK NO. _____ DISTRICT NO _____
JOB ADDRESS 13828, 13828 1/2 CREWE ST CITY WHITTIER , CA. ZIP 90605

This manual shall remain with the building throughout the life cycle of the structure.

This structure contains various elements designed for the purpose of improving public health, safety, and general welfare. Please note the following elements that are applicable to this structure, and provide or attach the appropriate information.

1. HVAC System **Installed? YES ❒ NO ❒**

Manufacturer _____
SEER _____
Efficiency _____
Air Filter MERV _____

Attach operation and maintenance instructions to this manual.

2. Water Heating System **Installed? YES ❒ NO ❒**

Manufacturer _____
Efficiency _____

Attach operation and maintenance instructions to this manual.

3. Other Equipment **Installed? YES ❒ NO ❒**

Manufacturer _____
Special Instructions _____

Attach operation and maintenance instructions to this manual.

4. Roof and Yard Drainage **Installed? YES ❒ NO ❒**

Linear Feet of Gutter _____
Gutters shall me maintained free of debris at all times.
Number of Downspouts _____
Number of Catch Basins _____

5. Irrigation System **Installed? YES ❒ NO ❒**

Irrigation Controller Type and Manufacturer _____

Attach operation and maintenance instructions to this manual.

6. Water Reuse System **Installed? YES ❒ NO ❒**

Water Reuse Type _____

Attach operation and maintenance instructions to this manual.

7. Utilities

Electrical Service Provider _____ Tel – ( ) _____-_____
Natural Gas Service Provider _____ Tel – ( ) _____-_____
Water Service Provider _____ Tel – ( ) _____-_____
Septic System Installer _____ Tel – ( ) _____-_____
Recycling Pickup _____ Tel – ( ) _____-_____

8. Public Transportation

Nearest Bus Stop _____
Nearest Subway Stop _____
Nearest Carpool Location _____

Attach a map to this manual showing the structure's location relative to public transportation.

9. Humidity

Provide information about the positive impacts of maintaining a relative humidity between 30%-60% within this structure. Positive impacts include:

a. *Resistance to the growth of dust mites, mildew, and mold.*
b. *Resistance to possible allergic reactions.*
c. *Maintains interior wood and paint surfaces.*

10. Routine Maintenance

Attach instructions on routine maintenance for critical building elements including, but not limited to the following.

a. *Equipment and appliances*
h. *Roof and yard drainage*
i. *Space conditioning systems*
j. *Landscape irrigation systems*
k. *Other installed systems*

11. Solar Energy **Installed? YES ❒ NO ❒**

Manufacturer _____
Special Instructions _____

Attach operation and maintenance instructions to this manual. If no solar energy system is installed, attach information on state incentive programs.

12. Verifications

Adhesives Manufacturer and Type _____
VOC Level _____
Caulk Manufacturer and Type _____
VOC Level _____
Aerosol Adhesives Manufacturer and Type _____
VOC Level _____
Paint Manufacturer and Type _____
VOC Level _____
Sealer/Stain Manufacturer and Type _____
VOC Level _____
Carpet Manufacturer and Type _____
Testing Program Certification _____
Resilient Flooring Manufacturer and Type _____
Testing Program Certification _____
Composite Wood Manufacturer and Type _____
Formaldehyde Limits _____

Attach all product certifications, specifications, and applicable chain of custody certifications to this manual.

Public Works
LOS ANGELES COUNTY

COUNTY OF LOS ANGELES
DEPARTMENT OF PUBLIC WORKS
BUILDING AND SAFETY DIVISION

GREEN BUILDING STANDARDS CODE
GENERAL NOTES

GENERAL PROJECT INFORMATION

PLAN CHECK NO. _____ DISTRICT NO _____
JOB ADDRESS 13828, 13828 1/2 CREWE ST CITY WHITTIER , CA. ZIP 90605

NOTE: Numbers in the parenthesis ( ) refer to sections of the 2023 edition of the County of Los Angeles Green Building Standards Code, Table (T).

INSTRUCTIONS

- The following notes must be included on the plans.

GENERAL REQUIREMENTS

1. Plumbing fixtures and fixture fittings on the plans shall comply with the following flow rates:
   a. Water Closets – 1.28 GPF
   b. Urinals – 0.5 GPF
   c. Wall-mounted urinal – 0.125 GPF
   d. Single showerhead – 1.8 GPM at 80psi
   e. Multiple showerheads – 1.8 GPM at 80psi for all combined showerheads
   f. Lavatory faucets – 1.2 GPM at 60psi
   g. Lavatory faucets in public use areas – 0.5 GPM at 60psi
   h. Metering faucets - .20 gallons per cycle
   i. Kitchen faucets – 1.8 GPM at 60psi (4.303.1)
2. Annular spaces around pipes, electrical cables, conduits, or other openings in sole/bottom plates at exterior walls shall be protected against the passage of rodents by closing such openings with cement mortar, concrete masonry, or a similar method acceptable to the enforcing agency. (4.406.1)
3. Fireplaces shall be direct vent sealed combustion type. Indicate on the plans the manufacturer name and model number. (4.503.1)
4. At the time of rough installation, during storage on the construction site, and until final startup of the heating, cooling and ventilating equipment, all duct and other related air distribution component openings shall be covered with tape, plastic, sheetmetal, or other acceptable methods to reduce the amount of water, dust and debris which may enter the system. (4.504.1)
5. Building materials with visible signs of water damage shall not be installed. Wall and floor framing shall not be enclosed when the framing members exceed 19% moisture content. Insulation products which are visibly wet or have high moisture content shall be replaced or allowed to dry prior to enclosure in wall or floor cavities. (4.505.3)
6. All mechanical exhaust fans in rooms with a bathtub or shower shall comply with the following:
   a. Fans shall be ENERGY STAR compliant and be ducted to terminate outside the building.
   b. Fans must be controlled by a readily accessible humidistat unless functioning as a component of a whole house ventilation system. Humidity control shall be capable of adjustment between a relative humidity range of 50% and 80%. (4.506.1)
7. Adhesives, sealants and caulks shall meet or exceed the standards outlined in Section 4.504.2.1 and comply with the VOC limits in Tables 4.504.1 and 4.504.2 as applicable. (4.504.2.1)
8. Paints and coatings shall meet or exceed the standards outlined in Section 4.504.2.2 and comply with the VOC limits in Table 4.504.3. (4.504.2.2)
9. Aerosol paints and coatings shall meet or exceed the standards outlined in Section 4.504.2.3. (4.504.2.3)
10. All carpet installed in the building interior shall meet all the testing and product requirements of one of the following:
    a. Carpet and Rug Institute's Green Label Plus Program OR
    b. California Department of Public Health Standard Method for the testing of VOC Emissions (Specification 01350) OR
    c. NSF/ANSI 140 at the Gold Level OR
    d. Scientific Certifications Systems Indoor Advantage Gold (4.504.3)
11. All carpet cushion installed in the building interior shall meet the requirements of the Carpet and Rug Institute Green Label Program. Carpet adhesives shall not exceed a VOC limit of 50 g/L. (4.504.3.1, 4.504.3.2)
12. A minimum of 80% of floor area receiving resilient flooring shall comply with one of the following:
    a. Products certified as a Low-Emitting Material in the CHPS High Performance Products Database, OR
    b. Products certified under UL GREENGUARD Gold (Formerly the Greenguard Children & Schools program), OR
    c. RFCI FloorScore program, OR
    d. Meet the California Department of Public Health Standard Method for the testing of VOC Emissions (Specification 01350) (4.504.4)
13. Composite wood products (hardwood plywood, particle board, and MDF) installed on the interior or exterior of the building shall meet or exceed the standards outlined in Table 4.504.5. Verification of compliance with these sections must be provided at the time of inspection. (4.504.5)

TABLE 4.504.3/TABLE 5.504.4.3
VOC CONTENT LIMITS FOR ARCHITECTURAL COATING[2,3]
Grams of VOC per Liter of Coating, Less Water and Less Exempt Compounds

COATING CATEGORY	VOC LIMIT	COATING CATEGORY	VOC LIMIT
Flat coatings	50	Magnesite cement coatings	450
Nonflat coatings	100	Mastic texture coatings	100
Nonflat high-gloss coatings	150	Metallic pigmented coatings	500
SPECIALTY COATINGS		Multi-color coatings	250
Aluminum roof coating	400	Pretreatment wash primers	420
Basement specialty coatings	400	Primers, sealers, and undercoaters	100
Bituminous roof coatings	50	Reactive penetrating sealers	350
Bituminous roof primers	350	Recycled coatings	250
Bond breakers	350	Roof coatings	50
Concrete curing compounds	350	Rust preventative coatings	250
Concrete/masonry sealers	100	Shellacs: Clear / Opaque	730 / 550
Driveway sealers	50	Specialty primers, sealers and undercoaters	100
Dry fog coatings	150	Stains	250
Faux finishing coatings	350	Stone consolidants	450
Fire resistive coatings	350	Swimming pool coatings	340
Floor coatings	100	Traffic marking coatings	100
Form-release compounds	250	Tub and tile refinish coatings	420
Graphic arts coatings (sign paints)	500	Waterproofing membranes	250
High-temperature coatings	420	Wood coatings	275
Industrial maintenance coatings	250	Wood preservatives	350
Low solids coatings[1]	120	Zinc-rich primer	340

1. Grams of VOC per liter of coating, including water and including exempt compounds.
2. The specified limits remain in effect unless revised limits are listed in subsequent columns in the table.
3. Values in this table are derived from those specified by the California Air Resources Board, Architectural Coatings Suggested Control Measure, February 1, 2008. More information is available from the Air Resources Board.

TABLE 4.504.5/TABLE 5.504.4.5
FORMALDEHYDE LIMITS[1]
Maximum Formaldehyde Emissions in Parts per Million

PRODUCT	CURRENT LIMIT
Hardwood plywood veneer core	0.05
Hardwood plywood composite core	0.05
Particleboard	0.09
Medium density fiberboard	0.11
Thin medium density fiberboard[2]	0.13

1. Values in this table are derived from those specified by the California Air Resources Board, Air Toxics Control Measure for Composite Wood as tested in accordance with ASTM E 1333. For additional information, see California Code of Regulations, Title 17, Section 93120 through 93120.12.
2. Thin medium density fiberboard has a maximum thickness 5/16 inch (8mm).

TABLE 4.504.2/TABLE 5.504.4.2
SEALANT VOC LIMIT
Less Water and Less Exempt Compounds in Grams Per Liter

SEALANTS	VOC LIMIT
Architectural	250
Marine deck	760
Nonmembrane roof	300
Roadway	250
Single-ply roof membrane	450
Other	420
SEALANT PRIMERS	
Architectural Nonporous	250
Porous	775
Modified bituminous	500
Marine deck	760
Other	750

Note: For additional information regarding methods to measure the VOC content specified in this table, see South Coast Air Quality Management District Rule 1168.

TABLE 4.504.1/TABLE 5.504.4.1
ADHESIVE VOC LIMIT[1,2]
Grams of VOC per Liter of Coating, Less Water and Less Exempt Compounds

ARCHITECTURAL APPLICATIONS	VOC LIMIT
Indoor carpet adhesives	50
Carpet pad adhesives	50
Outdoor carpet pad adhesives	150
Wood flooring adhesives	100
Rubber floor adhesives	60
Subfloor adhesives	50
Ceramic tile adhesives	65
VCT and asphalt tile adhesives	50
Drywall and panel adhesives	50
Cove base adhesives	50
Multipurpose construction adhesives	70
Structural glazing adhesives	100
Single-ply roof membrane adhesives	250
Other adhesives	50
SPECIALITY APPLICATIONS	
PVC welding	510
CPVC welding	490
ABS welding	325
Plastic cement welding	250
Adhesive primer for plastic	550
Contact adhesive	80
Special purpose contact adhesive	250
Structural wood member adhesive	140
Top and trim adhesive	250
SUBSTRATE SPECIFIC APPLICATIONS	
Metal to metal	30
Plastic foams	50
Porous material (except wood)	50
Wood	30
Fiberglass	80

1. If an adhesive is used to bond dissimilar substrates together, the adhesive with the highest VOC content shall be allowed.
2. For additional information regarding methods to measure the VOC content specified in this table, see South Coast Air Quality Management District Rule 1168

BUILDING AND SAFETY DIVISION
Department of Public Works
APPROVED
UNDER LOS ANGELES COUNTY CODE
TITLES 26, 30 AND 31
DMcombs
PUBLIC WORKS
04/08/2026 11:18:30 AM
This set of plans and specifications shall be kept at the job site at all times and it is unlawful to make any changes, modifications or alterations to these plans or specifications without the prior written permission of the Building Official. The approval of these plans and specifications SHALL NOT be construed to be a permit, nor shall it be deemed to permit or to be an approval of any work or activity that violates any provisions of the County Code or State Law.

REVISIONS	BY

Plans drawn by:
G P. FOX DRAFTING INC.
GUILLERMO PALAFOX
RESIDENTIAL DRAFTING
8050 E. FLORENCE AVE, SUITE.27
DOWNEY, CA 90240
(562) 928-5467
email: gpfoxdesign@verizon.net

GENERAL NOTES

1. VERIFY MEASUREMENTS WITH CORRESPONDING COSTRUCTED OR EXISTING CONDITIONS PRIOR TO PROCEEDING WITH THE WORK, AND NOTIFY THE DRAFTSMAN IMMEDIATELY OF SIGNIFICANT DISCREPANCIES.
2. FINISH ELEVATIONS REFERENCED ON THE DRAWINGS ARE DATUM ELEVATIONS ABOVE THE FINISH FLOOR ELEVATION. THE CONTRACTOR MUST COORDINATE DATUM-BASED ELEVATIONS SHOWN WITH SITE-SPECIFIC ELEVATIONS SHOWN ON CIVIL DRAWINGS.
3. WALL DIMENSIONS SHOWN ARE TO FACE OF WALL FINISH UNLESS SPECIFICALLY NOTED OTHERWISE.

Project:
PROPOSED NEW 2-STORY S.F.D. AND AN ADU

Sheet Title:
GREEN BUILDING REQUIREMENTS FOR BOTH BUILDINGS

Project for:
SALVADOR POLINA

Project:
Address:
13828, 13828 1/2 CREWE ST WHITTIER , CA.90605

Checked	G.P.
Job no.	----
Drawn	DN
Date	

SHEET:
1-2
OF SHEETS

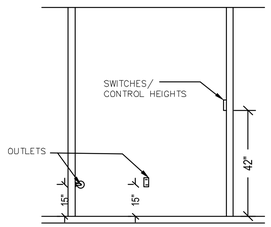

AGING ELECTRICAL OUTLETS DETAIL:

AGING-IN-PLACE ELECTRICAL NOTES:

Electrical Receptacle Outlet, Switch and Control Heights
Electrical receptacle outlets, switches and controls (including controls for heating, ventilation and air conditioning) intended to be used by occupants shall be located no more than 48 inches (1219.2 mm) measured from the top of the outlet box and not less than 15 inches (381 mm) measured from the bottom of the outlet box above the finish floor. R327.1.2

Exceptions:
Dedicated receptacle outlets; floor receptacle outlets; controls mounted on ceiling fans and ceiling lights; and controls located on appliances.
Receptacle outlets required by the California Electrical Code on a wall space where the distance between the finished floor and a built-in feature above the finish floor, such as a window, is less than 15 inches (381 mm).

R 327.1.1 FLOOR MOUNTED GRAB BAR NOTES:

1.WHERE THE WATER CLOSET IS NOT PLACED ADJACENT TO A SIDE WALL CAPABLE OF ACCOMMODATING A GRAB BAR, THE BATHROOM SHALL HAVE PROVISIONS FOR INSTALLATION OF FLOOR-MOUNTED, FOLDAWAY OR SIMILAR ALTERNATE GRAB BAR REINFORCEMENTS APPROVED BY THE ENFORCING AGENCY.

2.REINFORCEMENT SHALL NOT BE REQUIRED IN WALL FRAMING FOR PRE-FABRICATED SHOWER ENCLOSURES AND BATHTUB WALL PANELS WITH INTEGRAL FACTORY-INSTALLED GRAB BARS OR WHEN FACTORY-INSTALLED REINFORCEMENT FOR GRAB BARS IS PROVIDED.

3.SHOWER ENCLOSURES THAT DO NOT PERMIT INSTALLATION OF REINFORCEMENT AND/OR GRAB BARS SHALL BE PERMITTED, PROVIDED REINFORCEMENT FOR INSTALLATION OF FLOOR-MOUNTED GRAB BARS OR AN ALTERNATE METHOD IS APPROVED BY THE ENFORCING AGENCY.

4.BATHTUBS WITH NO SURROUNDING WALLS, OR WHERE WALL PANELS DO NOT PERMIT THE INSTALLATION OF REINFORCEMENT SHALL BE PERMITTED, PROVIDED REINFORCEMENT FOR INSTALLATION OF FLOOR-MOUNTED GRAB BARS ADJACENT TO THE BATHTUB OR AN ALTERNATE METHOD IS APPROVED BY THE ENFORCING AGENCY.

5.REINFORCEMENT OF FLOORS SHALL NOT BE REQUIRED FOR BATHTUBS AND WATER CLOSETS INSTALLED ON CONCRETE SLAB FLOORS.

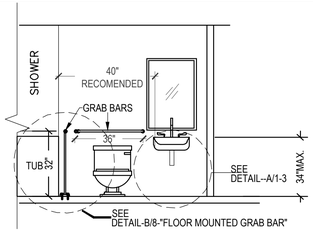

BATH INT. ELEV. -1

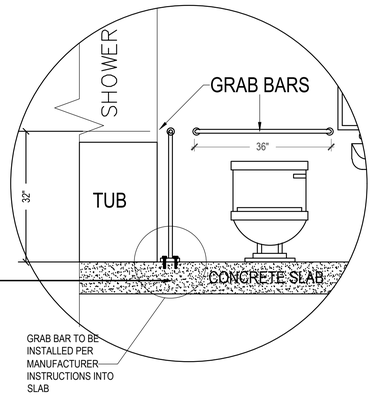

TYP. FLOOR MOUNTED GRAB BAR-DETAIL-B

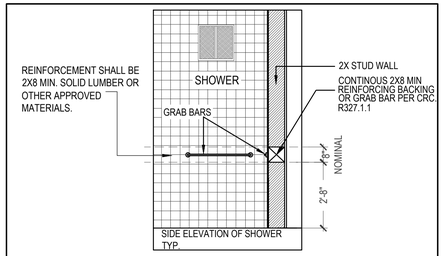

SHOWER REINFORCEMENT SHALL BE CONTINUOUS WHERE WALL FRAMING IS PROVIDED. BATHTUB AND COMBINATION BATHTUB/SHOWER REINFORCEMENT SHALL BE CONTINUOUS ON EACH END OF THE BATHTUB AND THE BACK WALL. ADDITIONALLY, BACK WALL REINFORCEMENT FOR LOWER GRAB BAR SHALL BE PROVIDED WITH THE BOTTOM EDGE LOCATED 6" MAX. ABOVE THE BATHTUB RIM. SEE CRC R327.1.1 EXCEPTIONS.

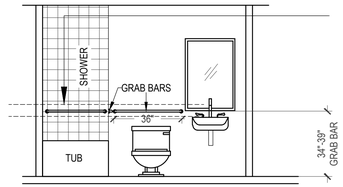

TYP.BATH INT. ELEV. -2

AGING-IN-PLACE DOOR NOTE:

EACH UNIT TO PROVIDE AN AGE-IN-PLACE BEDROOM DOOR AND BATHROOM DOOR PER SECTION R327.1.3.
EFFECTIVE JULY 1, 2024, AT LEAST ONE BATHROOM AND ONE BEDROOM ON THE ENTRY LEVEL SHALL PROVIDE A DOORWAY WITH A NET CLEAR OPENING OF NOT LESS THAN 32 INCHES (812.8 MM), MEASURED WITH THE DOOR POSITIONED AT AN ANGLE OF 90 DEGREES FROM THE CLOSED POSITION; OR, IN THE CASE OF A TWO- OR THREE-STORY SINGLE FAMILY DWELLING, ON THE SECOND OR THIRD FLOOR OF THE DWELLING IF A BATHROOM OR BEDROOM IS NOT LOCATED ON THE ENTRY LEVEL.

GRAB BAR NOTES:

IN NEWLY CONSTRUCTED DWELLING UNITS, REINFORCEMENT FOR GRAB BARS MUST BE INSTALLED IN ONE BATHROOM ON THE ENTRY LEVEL IN ACCORDANCE WITH SECTION R327.1.1.REINFORCEMENT SHALL BE LOCATED BETWEEN 32-INCHES AND 39 1/4-INCHES ABOVE THE FINISHED FLOOR FLUSH WITH THE WALL.

a. WATER CLOSET REINFORCEMENT SHALL BE INSTALLED ON BOTH SIDE WALLS OF THE FIXTURE, OR ON ONE SIDE WALL AND THE BACK WALL.
b. WHERE THERE IS NO BATHROOM AT THE ENTRY LEVEL, THE REINFORCEMENT FOR GRAB BARS MAY BE INSTALLED ON THE SECOND OR THIRD FLOOR.

INFORMATION AND/OR DRAWINGS IDENTIFYING THE LOCATION OF GRAB BAR REINFORCEMENT SHALL BE PLACED IN THE OPERATION AND MAINTENANCE MANUAL IN ACCORDANCE WITH THE CGBSC SECTION 4.410.1. [CRC R327.1.1.1]

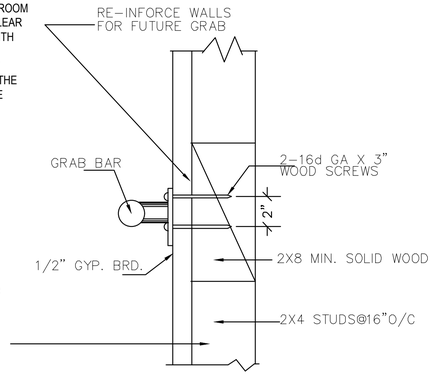

GRAB-BARS REINFORCEMENT DETAIL-A

DOORBELL BUTTONS REQUIREMENT

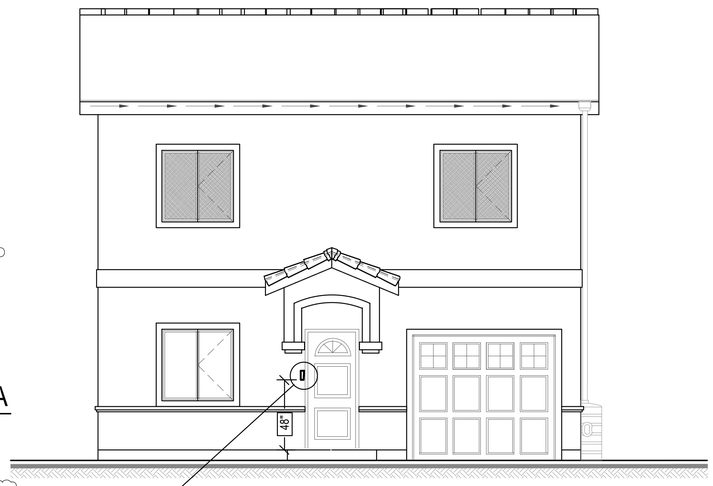

NORTH ELEVATION

SCALE: 1/4"=1'-0"

R327.1.4 Doorbell Buttons
Doorbell buttons or controls, when installed, shall not exceed 48 inches (1219.2 mm) above exterior floor or landing, measured from the top of the doorbell button assembly. Where doorbell buttons integrated with other features are required to be installed above 48 inches (1219.2 mm) measured from the exterior floor or landing, a standard doorbell button or control shall also be provided at a height not exceeding 48 inches (1219.2 mm) above exterior floor or landing, measured from the top of the doorbell button or control.

BUILDING AND SAFETY DIVISION
Department of Public Works
APPROVED
UNDER LOS ANGELES COUNTY CODE
TITLES 26, 30 AND 31
DMcombs
PUBLIC WORKS
04/08/2026 11:18:30 AM
This set of plans and specifications must be kept at the job site at all times and it is unlawful to make any changes or modifications or deviate from these plans or specifications without the prior written permission of the Building Official. The stamping of this set of plans and specifications SHALL NOT, under any circumstances, be deemed to permit or to be an approval of any work or activity that violates any provisions of any County Ordinance or State Law

LACRC SECTION R327 (Effective January 1st, 2023)

AGING-IN-PLACE DESIGN AND FALL PREVENTION

R327.1 Aging-in-place design and fall prevention. Newly constructed dwellings subject to the requirements of this code shall be designed and constructed in accordance with Sections R327.1.1 through R327.1.4.

Exceptions:

1. Covered multifamily dwellings designed and constructed in accordance with Chapter 11A of the California Building Code.

2. Public housing and places of public accommodation required to comply with Chapter 11B of the California Building Code.

R327.1.1 Reinforcement for grab bars. At least one bathroom on the entry level shall be provided with reinforcement installed in accordance with this section. Where there is no bathroom on the entry level, at least one bathroom on the second or third floor of the dwelling shall comply with this section.

R327.1.2 Electrical receptacle outlet, switch and control heights. Electrical receptacle outlets, switches and controls (including controls for heating, ventilation and air conditioning) intended to be used by occupants shall be located no more than 48 inches (1219.2 mm) measured from the top of the outlet box and not less than 15 inches (381 mm) measured from the bottom of the outlet box above the finish floor.

R327.1.3 Interior doors. Effective July 1, 2024, at least one bathroom and one bedroom on the entry level shall provide a doorway with a net clear opening of not less than 32 inches (812.8 mm), measured with the door positioned at an angle of 90 degrees from the closed position; or, in the case of a two- or three-story single family dwelling, on the second or third floor of the dwelling if a bathroom or bedroom is not located on the entry level

R327.1.4 Doorbell buttons. Doorbell buttons or controls, when installed, shall not exceed 48 inches (1219.2 mm) above exterior floor or landing, measured from the top of the doorbell button assembly. Where doorbell buttons integrated with other features are required to be installed above 48 inches (1219.2 mm) measured from the exterior floor or landing, a standard doorbell button or control shall also be provided at a height not exceeding 48 inches (1219.2 mm) above exterior floor or landing, measured from the top of the doorbell button or control.

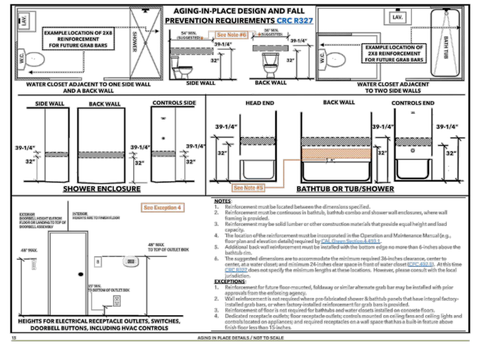

Standard Notes for "Electric Ready" Requirements per the 2022 California Building Energy Efficiency Standards

NOTE: These requirements apply to new construction for single family residential buildings and new detached ADU buildings.

Water Heating System (*Option 1*) - Section 150.0(n)
- Provide a designated space (2.5' by 2.5' wide and 7.5' tall) within 3 feet of gas water heater.
- Provide a 20A/1P circuit to a receptacle outlet near the gas water heater.
- Reserve the space next to this circuit breaker and label both as "for future 240V use".
- Provide the receptacle circuit with 3#10 conductors + #10 ground.
- Mark both ends of the unused conductor as "spare".

Water Heating System (*Option 2*) - Section 150.0(n)
- Provide designated space (2.5' by 2.5' wide and 7.5' tall) more than 3 feet from gas water heater.
- Reserve a 2 pole breaker space and label as "for future 240V use".
- Provide a junction box at this designated space with a minimum 30A rated branch circuit (3 #10 conductors + #10 ground).
- Mark the junction box cover as "240V ready".
- Cold and hot water supply lines pass through the designated space as described in 150.0(n)(1)(B)(iii)-(v).

Energy Storage Ready - Section 150.0(s)
- Provide main service panel with a minimum 225A busbar rating.
- Provide a minimum 60A rated subpanel.
- Provide a minimum 60A breaker and feeder to the subpanel.
- Provide at least the following four circuits in the subpanel:
  - Refrigerator receptacle outlet
  - Bedroom receptacle outlet
  - Lighting circuit near primary egress
  - Any circuit chosen by the installer/designer.
- Provide sufficient space between the main panel and subpanel for future transfer equipment.

Heat Pump Space Heater Ready - Section 150.0(t)
- Provide a junction box within 3 feet of the gas furnace with a minimum 30A rated branch circuit wiring (3 #10 conductors + #10 ground).
- Mark the junction box cover as "240V ready".
- Reserve a 2 pole breaker space and label as "for future 240V use".

Electric Cooktop Ready - Section 150.0(u)
- Provide a junction box within 3 feet of the gas cooktop with no obstructions and with a minimum of 50A rated branch circuit conductors (3 #6 conductors + #10 ground).
- Mark the junction box cover as "240V ready".
- Reserve a 2 pole breaker space and label as "for future 240V use".

Electric Clothes Dryer Ready - Section 150.0(v)
- Provide a junction box within 3 feet of the gas dryer with no obstruction with a minimum 30A rated branch circuit conductor (3 #10 conductors + #10 ground).
- Mark the junction box cover as "240V ready".
- Reserve a 2 pole breaker space and label as "for future 240V use".

REVISIONS	BY
12/4/23	C.L.
3/29/24	C.L.
2/25/2026	C.L.

Plans drawn by:
G P. FOX DRAFTING INC.
RESIDENTIAL DRAFTING
8050 E. FLORENCE AVE, SUITE.27
DOWNEY, CA 90240
(562) 928-5467
email: gpfoxdesign@verizon.net

GENERAL NOTES

1. VERIFY MEASUREMENTS WITH CORRESPONDING CONSTRUCTED OR EXISTING CONDITIONS PRIOR TO PROCEEDING WITH THE WORK, AND NOTIFY THE DRAFTSMAN IMMEDIATELY OF SIGNIFICANT DISCREPANCIES.

2. FINISH ELEVATIONS REFERENCED ON THE DRAWINGS ARE DATUM ELEVATIONS ABOVE THE FINISH FLOOR ELEVATION. THE CONTRACTOR MUST COORDINATE DATUM-BASED ELEVATIONS SHOWN WITH SITE-SPECIFIC ELEVATIONS SHOWN ON CIVIL DRAWINGS.

3. WALL DIMENSIONS SHOWN ARE TO FACE OF WALL FINISH UNLESS SPECIFICALLY NOTED OTHERWISE.

Project:
PROPOSED 2-STORY UNIT & ADU, OVER GARAGE/STORAGE AND 2-STORY DUPLEX.

Sheet Title:
AGING-IN-PLACE

Project for:
ERNESTO RAMOS

Project:
Address:
4002 PRINCETON ST LOS ANGELES CA 90023

Checked	G.P.
Job no.	
Drawn	C.L.
Date	2/19/2026

SHEET:
1-3
OF SHEETS

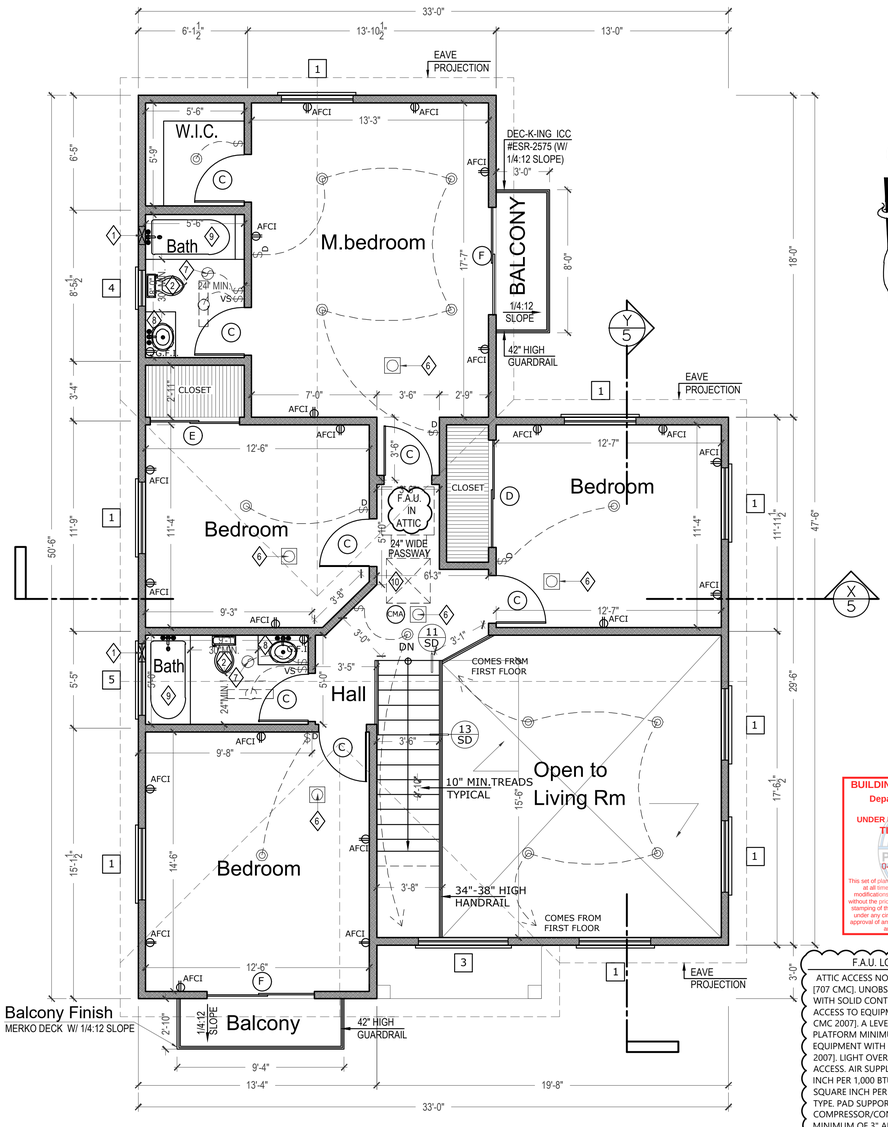

SECOND FLOOR PLAN

SCALE: 1/4"=1'-0"

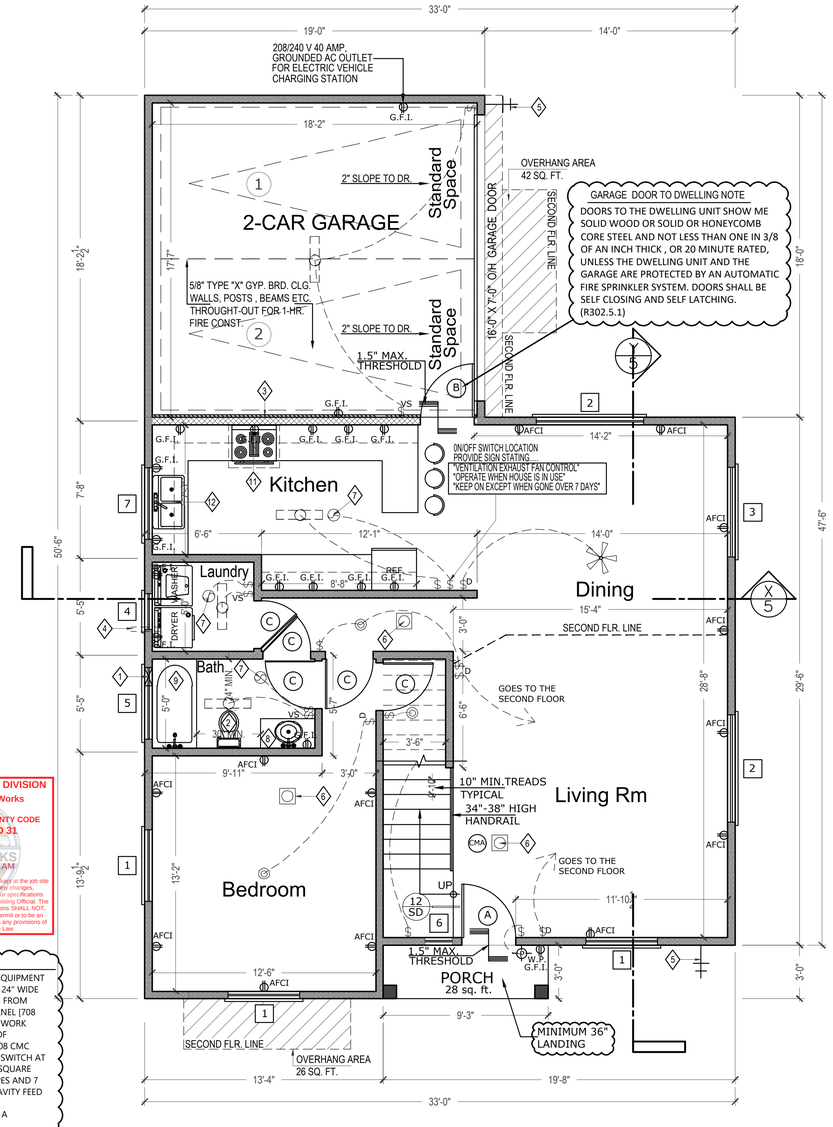

FIRST FLOOR PLAN

SCALE: 1/4"=1'-0"

BUILDING AND SAFETY DIVISION
Department of Public Works
APPROVED
UNDER LOS ANGELES COUNTY CODE
TITLES 26, 30 AND 31
DMcCombs
PUBLIC WORKS
04/08/2026 11:18:30 AM
This set of plans and specifications must be kept at the job site at all times and it is unlawful to make any changes, modifications or alterations to these plans or specifications without the prior written permission of the Building Official. The stamping of this set of plans and specifications SHALL NOT, under any circumstances, be deemed to permit or to be an approval of any work or activity that violates any provisions of any County Ordinance or State Law.

F.A.U. LOCATION NOTE:
ATTIC ACCESS NOT OVER 20' FROM EQUIPMENT [707 CMC], UNOBSTRUCTED PASSAGE 24" WIDE WITH SOLID CONTINUOUS FLOORING FROM ACCESS TO EQUIPMENT/CONTROL PANEL [708 CMC 2007], A LEVEL, UNOBSTRUCTED WORK PLATFORM MINIMUM 30" IN FRONT OF EQUIPMENT WITH 30" HEADROOM [708 CMC 2007]. LIGHT OVER EQUIPMENT WITH SWITCH AT ACCESS. AIR SUPPLY OPENINGS OF 2 SQUARE INCH PER 1,000 BTU FOR BLOWER TYPES AND 7 SQUARE INCH PER 1,000 BTU FOR GRAVITY FEED TYPE. PAD SUPPORTING COMPRESSOR/CONDENSER SHALL BE A MINIMUM OF 3" ABOVE GRADE.

NOTES:

WHOLE HOUSE EXHAUST FANS SHALL HAVE INSULATED LOUVERS/ COVERS WHICH CLOSE WHEN THE FAN IS OFF. COVERS SHALL HAVE AN INSULATED VALUE OF R-4.2

"HEATING AND AIR CONDITIONING SYSTEMS SHALL HAVE THEIR EQUIPMENT SELECTED USING THE '3' METHODS PER SECTION 4.507.2"

NOTE:

PLEASE PROVIDE THE REQUIRED MECHANICAL WHOLE HOUSE VENTILATION AS REQUIRED PER THE ASHRAE 62.2 STANDARD. ALL SPECIFIC INFORMATION FOR EACH MODEL PLAN TYPE SHALL INCLUDE:
1. FAN TYPE/MODEL & LOCATION.
2. FAN RATED AT LESS ONE SONE.
3. SHALL MOVE THE REQUIRED AMOUNT OF AIR PER EQUATION 4.1 WITHIN THE ASHRAE 62.2 STANDARD.
4. FAN ATTACHMENT TO THE PROPER DIAMETER AND LEGHT DUCT PER EQUATION. 7.1 WITHIN THE ASHRAE 62.2 STANDARD.
5. CONTROLLED BY A STANDARD ON/OFF SWITCH LABELED TO COMMUNICATE THE DESIRED FUNCTION.

EQUATION 4.1: Qfan = 0.01 Afloor + 7.5 (Nbr+1) = 0.01 X 2,017 + (5+1) = 26.17

NOTES:

AN APPROVED SMOKE ALARMS SHALL BE INSTALLED IN EACH SLEEPING ROOM & HALLWAY OR AREA GIVING ACCESS TO A SLEEPING ROOM, AND ON EACH STORY AND BASEMENT FOR DWELLINGS WITH MORE THAN ONE STORY. SMOKE ALARMS SHALL BE INTERCONNECTED SO THAT ACTUATION OF ONE ALARM WILL ACTIVATE ALL THE ALARMS WITHIN THE INDIVIDUAL DWELLING UNIT. IN NEW CONSTRUCTION SMOKE ALARMS SHALL RECEIVE THEIR PRIMARY POWER SOURCE FROM THE BUILDING WIRING AND SHALL BE EQUIPPED WITH BATTERY BACK UP AND LOW BATTERY SIGNAL. (R314)

AN APPROVED CARBON MONOXIDE ALARM SHALL BE INSTALLED IN DWEELING UNITS AND IN SLEEPING UNITS WITHIN WHICH FUEL-BURNING APPLIANCES ARE INSTALLED AND IN DWELLING UNITS THAT HAVE ATTACHED GARAGES. CARBON MONOXIDE ALARM SHALL BE PROVIDED OUTSIDE OF EACH SEPARATE DWELLING UNIT SLEEPING AREA IN THE IMMEDIATE VICINITY OF THE BEDROOMS(S) AND ON EVERY LEVEL OF A DWELLING UNIT INCLUDING BASEMENTS. (R315)

NEW FLOOR AREAS S.F.D:

First Floor:	1,014 s.f.
Second Floor:	1,374 s.f.
Minus Stairs:	−57 s.f.
Total Floor Area:	2,331 s.f.
Porch:	28 s.f.
2−Car Garage:	342 s.f

EVSE NOTES:

- A MINIMUM 1" (INSIDE DIAMETER) LISTED RACEWAY IS INSTALLED FOR EACH UNIT TO ACCOMMODATE A DEDICATED 208/240 VOLT BRANCH CIRCUIT. THE RACEWAY SHALL ORIGINATE AT THE MAIN SERVICE OR A SUBPANEL AND TERMINATE IN CLOSE PROXIMITY TO THE PROPOSED LOCATION OF THE CHARGING SYSTEM INTO A LISTED CABINET, BOX OR ENCLOSURE.

- "THE PANEL OR SUBPANEL SHALL PROVIDE CAPACITY TO INSTALL A 40-AMPERE MINIMUM DEDICATED BRANCH CIRCUIT AND SPACE(S) RESERVED TO PERMIT INSTALLATION OF A BRANCH CIRCUIT OVERCURRENT PROTECTIVE DEVICE.

- "THE SERVICE PANEL OR SUBPANEL CIRCUIT DIRECTORY SHALL IDENTIFY THE OVERCURRENT PROTECTIVE DEVICE SPACE(S) RESERVED FOR FUTURE EV CHARGING AS EV CAPABLE. THE RACEWAY TERMINATION LOCATION SHALL BE PERMANET AND VISIBLY MARKED EV CAPABLE."

WALL LEGEND

- 2X4 OR 2X6 STUD WALLS (2X6 STUD@ALL FIRST FLR.WALLS)
- 1−HOUR FIRE RATED PARTITION
- TYP.WINDOW

RECESSED LUMINAIR NOTE:
FOR RECESSED LUMINARIES, SPECIFY FIXTURES TO BE LISTED FOR ZERO CLEARANCE INSULATION CONTACT (IC)
BY UL OR OTHER NATIONALLY RECOGNIZED TESTING/RATING LABORATORY. CEC 150(K)(8)

HIGH EFFICACY NOTE:
ALL LIGHTING TO BE HIGH EFFICACY. CENERGYC 150.0(K)(C,J)

Electrical Legend

	ELECTRICAL RECEPTACLE
G.F.I.	GROUND FAULT RECEPTACLE
$	SWITCHES
$D	SWITCHES WITH DIMMER
$VS	SWITCHES WITH VACANCY SENSOR
	FLUORESCENT FIXTURE HIGH EFFICACY
	LIGHTING FIXTURES HIGH EFFICACY
	EXHAUST FAN W/ 50 CFM MIN. TO OUTSIDE MUST BE "ENERGY STAR" W/ HUMIDISTAT READILY ACCESSIBLE
SMA	HARDWIRED SMOKE DETECTOR
CMA	HARD-WIRED CARBON MONOXIDE ALARM INTERCONNECTED WITH BATTERY BACKUP
	LIGHTING W/ MOTION SENSOR ON AND PHOTO-CONTROLLED SENSOR OFF
	FAN WITH LIGHTING

Floor Plan Key Notes:

1. PROVIDE A 12" SQ. (MINIMUM) ACCESS PANEL TO BATHTUB TRAP CONNECTION EXCEPT WHERE CONCEALED FIXTURE CONNECTIONS ARE MADE WITHOUT SLIP JOINTS. DOOR TO BE TIGHTFITTING AND GASKETED.
2. PROVIDE A WATER SAVING LOW FLUSH WATER CLOSET. IN NEW BUILDING PROVIDE WATER CLOSET THAT USE A MAXIMUM OF 1.6 GALLONS PER FLUSH.
3. 5/8" TYPE "X" GYP. BRD. CLG., WALLS, POSTS , BEAMS ETC. THROUGHT-OUT FOR 1-HR. FIRE CONSTRUCTION
4. 4" Ø MIN. DRYER VENT UP TO FLR. JSTS. & TO OUTSIDE AIR W/ BACK-DRAFT DAMPER EXHAUST DUCT LENGTH IS LIMITED TO 14 FT. W/ 2 ELBOWS TWO FEET SHALL BE DECREASED FOR EACH 90 DEGREES ELBOW IN EXCESS OF TWO.
5. HOSE BIBB WITH BACKFLOW PREVENTER
6. SMOKE ALARM SHALL BE INTERCONNECTED HARD-WIRED WITH BATTERY BACKUP AND SHALL BE INSTALLED IN ACCORDANCE WITH NFPA 72.
7. EXHAUST FAN W/ 50 CFM MIN. TO OUTSIDE MUST BE "ENERGY STAR" W/ HUMIDISTAT READILY ACCESSIBLE
8. 30" HIGH TILE COUNTERTOP WITH LAVATORY.
9. FIBERGLASS TUB W/ SHOWER SHATTER PROOF ENCLOSURE 72" HIGH W.P. GREEN BRD. 3-WALLS
10. 30" X 30" ATTIC/HVAC ACCESS TO BE A TIGHTFITTING, SELF CLOSING & GASKETED DOOR.
11. 30" STOVE W/ HOOD OVER W/ CLR. ABOVE STOVE
12. 32" X 21" S. STL SINK W/ GARBAGE DISPOSAL ON A SEPARATE CIRCUIT.

Floor Plan Notes:

AN APPROVED SEISMIC GAS SHUT OFF VALVE WILL BE INSTALLED ON THE FUEL GAS LINE ON THE DOWN STREAM SIDE OF THE UTILITY METER AND BE REGIDLY CONNECTED TO THE EXTERIOR OF THE BUILDING OR STRUCTURE CONTAINING THE FUEL GAS PIPING. (PER ORDINANCE 170, 158) SEPARATE PLUMBING PERMIT IS REQUIRED).

PLUMBING FIXTURES ARE REQUIRED TO BE CONNCECTED TO A SANITARY SEWER OR TO AN APPROVED SEWAGE DISPOSAL SYSTEM (R306.3).

KITCHEN, SINKS, LAVATORIES, BATHTUBS, SHOWERS, BIDETS, LAUNDRY TUBS AND WASHING MACHINE OUTLETS SHALL BE PROVIDED WITH HOT AND COLD WATER AND CONNECTED TO AN APPROVED WATER SUPPLY (R306.4).

BATHTUB AND SHOWER FLOORS, WALLS ABOVE BATHTUBS WITH A SHOWERHEAD, AND SHOWER COMPARTMENTS SHALL BE FINISHED WITH A NONABSORBENT SURFACE. SUCH WALL SURFACES SHALL EXTEND TO A HEIGHT OF NOT LESS THAN 6 FEET ABOVE THE FLOOR (R307.2).

PROVIDE ULTRA LOW FLUSH WATER CLOSETS FOR ALL NEW CONSTRUCTION. EXISTING SHOWER HEADS AND TOILETS MUST BE ADAPTED FOR LOW WATER CONSUMPTION.

AUTOMATIC GARAGE DOOR OPENERS, IF PROVIDED, SHALL BE LISTED IN ACCORDANCE WITH UL 325.

SMOKE DETECTORS SHALL BE PROVIDED FOR ALL DWELLING UNITS INTENDED FOR HUMAN OCCUPANCY, UPON THE OWNER'S APPLICATION FOR A PERMIT FOR ALTERATIONS, REPAIRS, OR ADDITIONS, EXCEEDING ONE THOUSAND DOLLARS ($1,000). (R314.6.2).

WHERE A PERMIT IS REQUIRED FOR ALTERATIONS, REPAIRS OR ADDITIONS EXCEEDING ONE THOUSAND DOLLARS ($1,000), EXISTING DWELLINGS OR SLEEPING UNITS THAT HAVE ATTACHED GARAGES OR FUEL-BURNING APPLIANCES SHALL BE PROVIDED WITH A CARBON MONOXIDE ALARM IN ACCORDANCE WITH SECTION R315.1. CARBON MONOXIDE ALARMS SHALL ONLY BE REQUIRED IN THE SPECIFIC DWELLING UNIT OR SLEEPING UNIT FOR WHICH THE PERMIT WAS OBTAINED. (R315.2)

DOOR OPENING NOTE:
DOOR MAY OPEN ON AN EXTERIOR LANDING, PROVIDED THE DOOR DOES NOT SWING OVER THE EXTERIOR LANDING AND THE LANDING IS NOT MORE THAN 7.75-IN. BELOW THE TOP OF THRESHOLD. (R311.3.1 EX, R311.3.2)

Door Schedule:

SYM.	SIZE	REMARKS
A	3'-0" X 8'-0" X 1 3/4"	SOLID CORE W/ VIEW PORT
B	3'-0" X 6'-8" X 1 3/4"	1-HOUR FIRE RATED DOOR SELF CLOSING TIGHT FITTING , SELF LATCHING
C	2'-8" X 6'-8" X 1 3/8"	HOLLOW CORE
D	6'-0" X 6'-8"	VINYL SLID. DOORS (DBL. DRS.)
E	5'-0" X 6'-8"	SLIDING WOOD DOORS (DBL. DRS.)
F	6'-0" X 6'-8"	SLID. GLASS DBL. DRS., TEMP. GLS.

Window Schedule:

U. VALUE = .30
SHGC = .21

SYM.	SIZE	REMARKS
1	4'-0" X 4'-0"	VINYL SLID. WINDOW
2	6'-0" X 4'-0"	VINYL SLID. WINDOW
3	5'-0" X 5'-1"	FIXED CASEMENT WINDOWS
4	2'-0" X 1'-6"	VINYL SLID. WINDOW, TEMP. & OBSC. GLASS
5	4'-0" X 1'-6"	VINYL SLID. WINDOW, TEMP. & OBSC. GLASS
6	1'-6" X 6'-8"	VINYL WINDOW TEMP. GLASS
7	4'-0" X 3'-0"	VINYL SLID. WINDOW

REVISIONS	BY
2/25/2026	C.L.

Plans drawn by:
G P. FOX DRAFTING INC.
RESIDENTIAL DRAFTING
8050 E. FLORENCE AVE, SUITE.27
DOWNEY, CA 90240
(562) 928−5467
email: gpfoxdesign@verizon.net

GENERAL NOTES

1. VERIFY MEASUREMENTS WITH CORRESPONDING CONSTRUCTED OR EXISTING CONDITIONS PRIOR TO PROCEEDING WITH THE WORK, AND NOTIFY THE DRAFTSMAN IMMEDIATELY OF SIGNIFICANT DISCREPANCIES.
2. FINISH ELEVATIONS REFERENCED ON THE DRAWINGS ARE DATUM ELEVATIONS ABOVE THE FINISH FLOOR ELEVATION. THE CONTRACTOR MUST COORDINATE DATUM−BASED ELEVATIONS SHOWN WITH SITE−SPECIFIC ELEVATIONS SHOWN ON CIVIL DRAWINGS.
3. WALL DIMENSIONS SHOWN ARE TO FACE OF WALL FINISH UNLESS SPECIFICALLY NOTED OTHERWISE.

Project:
PROPOSED NEW 2-STORY S.F.D. AND AN ADU

Sheet Title:
FLOOR PLANS MAIN BLDG.

Project for:
SALVADOR POLINA

Project: Address:
13828, 13828 1/2 CREWE ST WHITTIER , CA.90605

BLDR240320002527

Checked	G.P.
Job no.	----
Drawn	J.P.M.
Date	03/19/2024

SHEET: 2 OF SHEETS

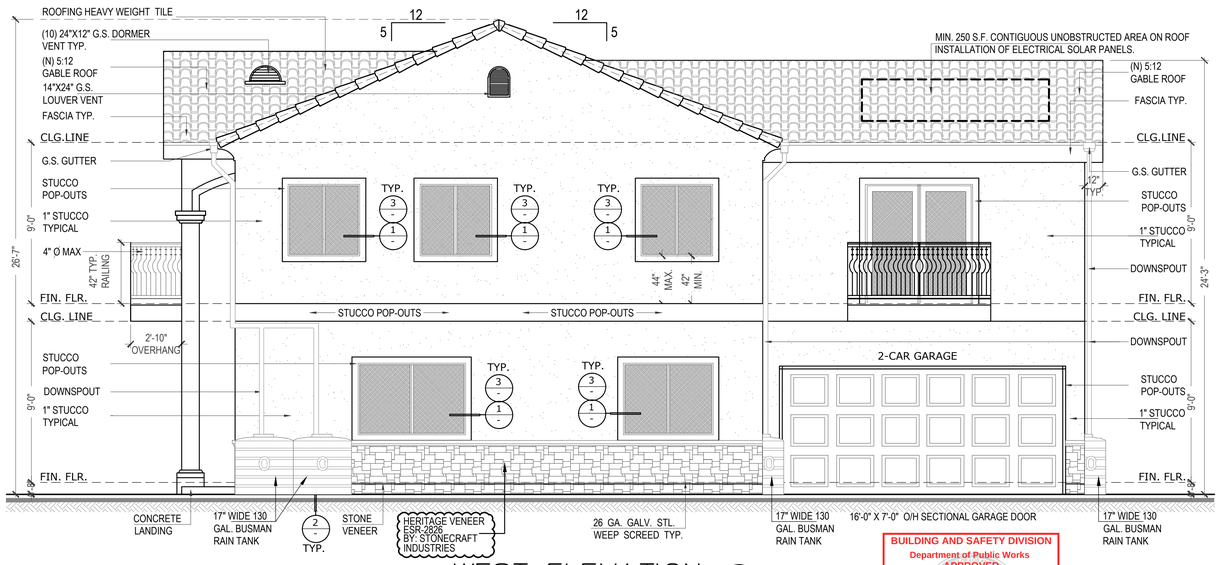

WEST ELEVATION

SCALE: 1/4"=1'-0"

BUILDING AND SAFETY DIVISION
Department of Public Works
APPROVED
UNDER LOS ANGELES COUNTY CODE
TITLES 26, 30 AND 31
DMCcombs
PUBLIC WORKS
04/08/2026 11:18:30 AM
This set of plans and specifications must be kept at the job site at all times, and it is unlawful to make any changes, modifications or deletions to these plans or specifications without the prior written permission of the Building Official. The stamping of this set of plans and specifications SHALL NOT, under any circumstances, be deemed to permit or to be an approval of any violation of any provisions of any code or law.

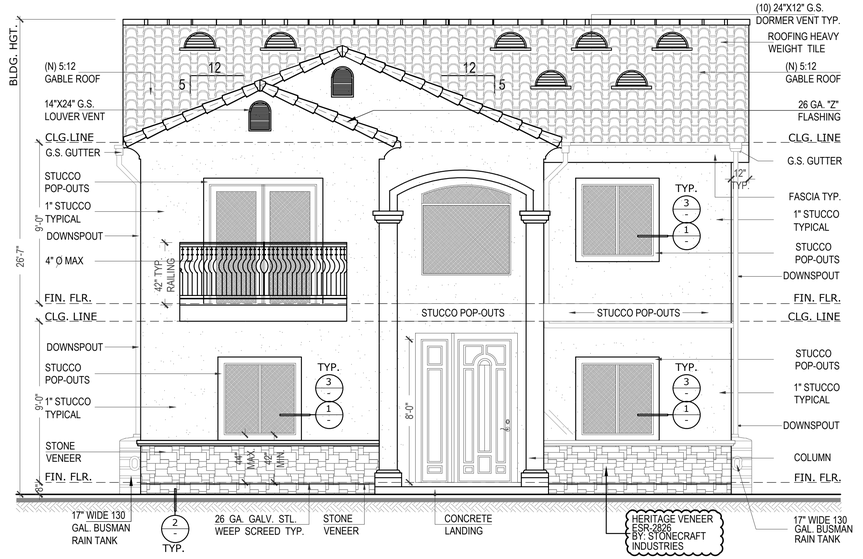

NORTH ELEVATION

SCALE: 1/4"=1'-0"

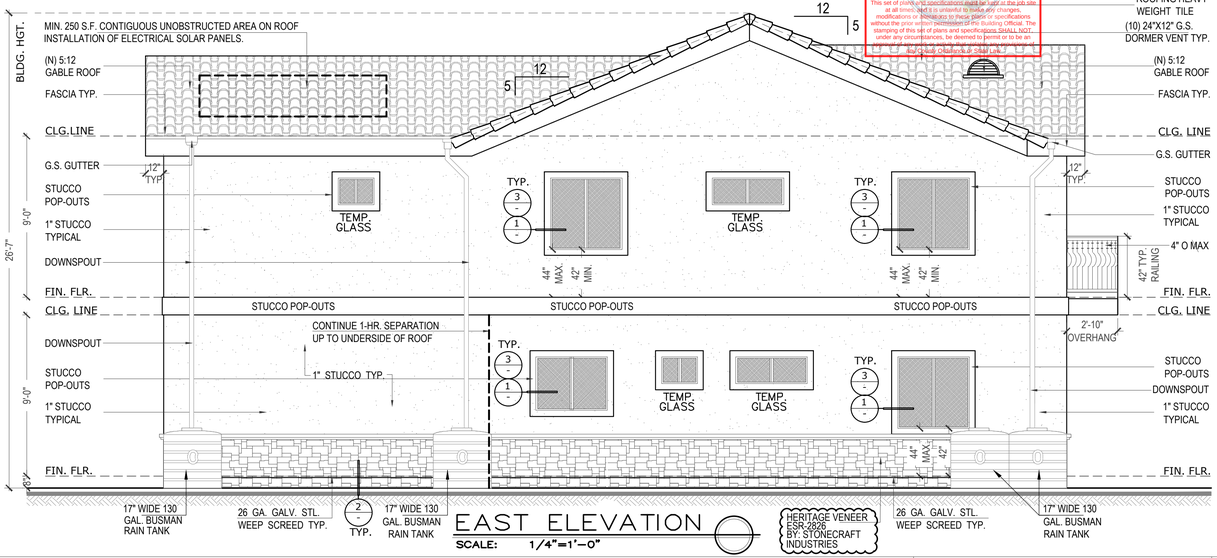

EAST ELEVATION

SCALE: 1/4"=1'-0"

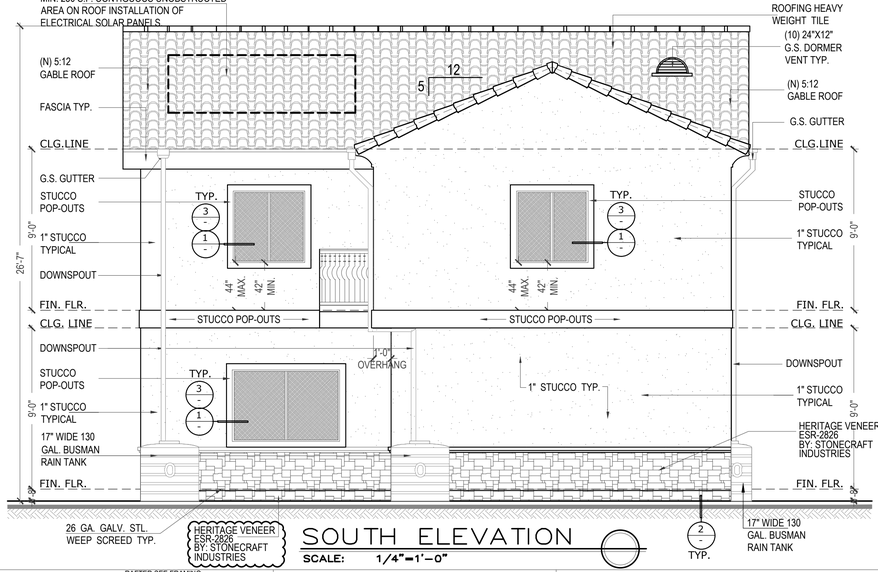

SOUTH ELEVATION

SCALE: 1/4"=1'-0"

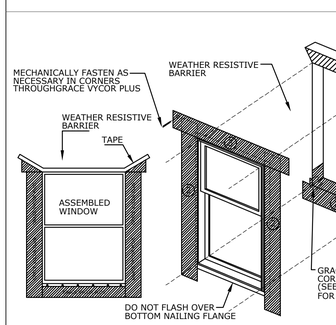

WINDOWS DETAIL

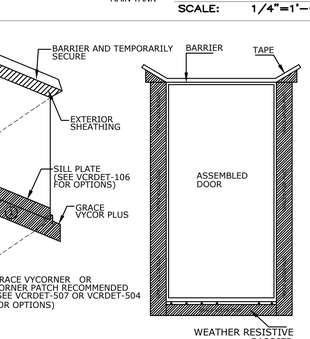

DOORS DETAIL

TYPICAL WINDOWS & DOORS FLASHING DETAIL - 1

NOTES:

A. VCRDET GRACE CONSTRUCTION CDM FOR THE MOST CURRENT DETAILS, INSTALLATION VIDEO AND PRODUCT DATA SHEETS.
B. RIPCORDS CAN BE REMOVED FROM GRACE VYCOR PLUS FOR EASE OF INSTALLATION.
C. REMOVE WEATHER RESISTIVE BARRIER FROM TOP OF WINDOW SILL PLATE.
D. INSTALL GRACE VYCOR PLUS IN ORDER AS SHOWN BY NUMBERS.
E. INSTALL GRACE VYCOR PLUS AND WEATHER RESISTIVE BARRIER TO FORM WATER-SHEDDING LAPS.
F. DETAIL ALSO RELIVANT FOR GRACE VYCOR V40 AND VYCOR BUTYL.

HEAD FLASHING TIE-IN INSTRUCTIONS:

1. CUT, FOLD UP AND TEMPORARY SECURE WEATHER RESISTIVE BARRIER ABOVE HEADER TO ALLOW FOR FLASHING INSTALLATION.
2. INSTALL GRAVE VYCOR PLUS HEAD FLASHING UNDER WEATHER RESISTIVE BARRIER ALONG HEADER.
3. FOLD WEATHER RESISTIVE BARRIER BACK OVER HEAD FLASHING AND SEAL WITH TAPE AS SHOWN ABOVE.

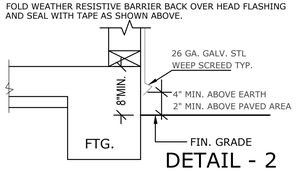

DETAIL - 2

ATTIC SPACE VENTILATION:

LIVING ATTIC AREA = 1,374 S.F.
1,374 / 150 = 9.16 S.F. REQUIRED
(10) 24"X12" DORMER VENTS= 6.80 S.F.
(3) 14"X24" LOUVER VENTS = 2.46 S.F.
TOTAL = 9.26 S.F. PROVIDED

OPENINGS SHALL HAVE CORRISION-RESISTANT WIRE MESH OR OTHER APPROVED MATERIAL WITH 1/16-IN. MINIMUM AND 1/4-IN MAXIMUM OPENING.
DORMER VENTS BY: "C & J METAL PRODUCTS INC." DM24 = 99 SQ. IN. EA. = 0.68 SQ. FT. EA.
LOUVER VENTS BY: "C & J METAL PRODUCTS INC." LV1424 = 119 SQ. IN. EA. = 0.82 SQ. FT. EA.

NOTE:
"4040 SL BEDROOM ESCAPE WINDOWS SHALL BE 20" MINIMUM CLEAR WIDTH & 24" MINIMUM CLEAR HEIGHT".

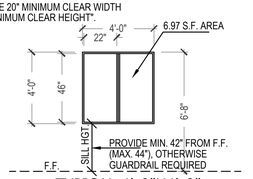

TYPICAL 4'-0"X4'-0" EMERGENCY WINDOW DETAIL-3

TYPICAL SHEAR WALL TO ROOF @ INTERIOR WALL DETAIL-4

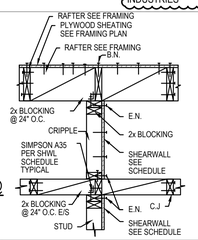

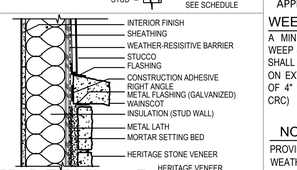

VENEER DETAIL - 5

ROOFING:

HEAVY WEIGHT TILE BY:
EAGLE ROOFING
ICC ESR -1900

INSTALLATION SHALL BE INACCORDANCE WITH MANUFACTURER'S SPECIFICATIONS

COOL ROOF:

* ROOFING HEAVY WEIGHT TILE
* HEAVY WEIGHT TILE BY: EAGLE ROOFING

"2-LAYERS OF GRADE "D" PAPER SHALL BE APPLIED OVER ALL WOOD BASE SHEATING."

WEEP SCREED

A MINIMUM 26 GA. CORROSION-RESISTANT OR PLASTIC WEEP SCREED WITH A MINIMUM VERTICAL FLANGE OF 3-1/2" SHALL BE PROVIDED AT OR BELOW FOUNDATION PLATE LINE ON EXTERIOR STUD WALLS. SCREED SHALL BE A MINIMUM OF 4" ABOVE EARTH OR 2" ABOVE PAVED AREAS. (R307.2 CRC)

NOTE:
PROVIDE TWO LAYERS OF GRADE "D" PAPER AS THE WEATHER-RESISTIVE BARRIER FOR PORTLAND CEMENT PLASTER (STUCCO) WHEN APPLIED OVER WOOD SHEATING (SUCH AS PLYWOOD).

NOTES:
"INSPECTION OF NAILING REQUIRED FOR DRYWALL AND ALL LATH WHEN IN PLACE. CORNER BEADS ARE TO BE NAILED. DRYWALL BOARD SPACING SHALL BE 3/8 INCH MAXIMUM."TWO LAYERS OF GRADE D PAPER SHALL BE APPLIED OVER ALL WOOD WOOD BASE SHEATHING.

NOTES:
BUILDINGS SHALL HAVE APPROVED ADDRES NUMBERS, BUILDING NUMBERS OR APPROVED BUILDING IDENTIFICATION PLACED IN A POSITION THAT IS PLAINLY LEGIBLE AND VISIBLE FROM THE STREET OR ROAD FRONTING THE PROPERTY. (R319.1)

NOTES:
PORCHES MUST HAVE A MINIMUM CLEAR HEIGHT OF 7'-0" FOR REQUIRED LIGHT AND VENTILATION. LATH, PLASTER AND DRYWALL TO CONFORM TO THE REQUIREMENTS OF CBC CHAPTER 25.

NOTES:
PROVIDE 44" MAX. SILL HGT. ABOVE FINISH FLOOR FOR EMERGENCY EXIT ON ALL BEDROOM WINDOWS.

NOTES:
PROVIDE ANTI-GRAFFITI FINISH WITHIN THE FIRST 9 FEET, MEASURED FROM GRADE, AT EXTERIOR WALLS AND DOORS. EXCEPTION: MAINTENANCE OF BUILDING AFFIDAVIT IS RECORDED BY THE OWNER TO COVENANT AND AGREE WITH THE CITY OF LOS ANGELES TO REMOVE ANY GRAFFITI WITHIN 7-DAYS OF THE GRAFFITI BEING APPLIED. (6306)

REVISIONS	BY
2/25/2026	C.L.

Plans drawn by:

G P. FOX DRAFTING INC.

RESIDENTIAL DRAFTING
8050 E. FLORENCE AVE, SUITE.27
DOWNEY, CA 90240
(562) 928-5467
email: gpfoxdesign@verizon.net

GENERAL NOTES

1. VERIFY MEASUREMENTS WITH CORRESPONDING CONSTRUCTED OR EXISTING CONDITIONS PRIOR TO PROCEEDING WITH THE WORK, AND NOTIFY THE DRAFTSMAN IMMEDIATELY OF SIGNIFICANT DISCREPANCIES.
2. FINISH ELEVATIONS REFERENCED ON THE DRAWINGS ARE DATUM ELEVATIONS ABOVE THE FINISH FLOOR ELEVATION. THE CONTRACTOR MUST COORDINATE DATUM-BASED ELEVATIONS SHOWN WITH SITE-SPECIFIC ELEVATIONS SHOWN ON CIVIL DRAWINGS.
3. WALL DIMENSIONS SHOWN ARE TO FACE OF WALL FINISH UNLESS SPECIFICALLY NOTED OTHERWISE.

Project:
PROPOSED NEW 2-STORY S.F.D. AND AN ADU

Sheet Title:
ELEVATIONS MAIN BLDG.

Project for:
SALVADOR POLINA

Project:
Address:
13828, 13828 1/2 CREWE ST WHITTIER , CA.90605

BLDR240320002527

Checked	G.P.
Job no.	----
Drawn	J.P.M
Date	03/19/2024

SHEET: **3**

OF SHEETS

GENERAL NOTES AND SPECIFICATIONS

1. DO NOT SCALE DRAWINGS.
2. THE CONTRACTOR SHALL VERIFY ALL DIMENSIONS AND CONDITIONS AND REPORT ANY DISCREPANCIES TO THE STRUCTURAL ENGINEER BEFORE PROCEEDING WITH THE PROJECT.
3. THE CONTRACTOR SHALL SUPERVISE AND DIRECT WORK AND WILL BE SOLELY RESPONSIBLE FOR ALL CONSTRUCTION MEANS, METHODS, TECHNIQUE, SEQUENCES AND PROCEDURES.
4. THE CONTRACTOR SHALL BE RESPONSIBLE OF ANY CONDITIONS WHICH MIGHT ENDANGER THE STABILITY OF THE STRUCTURE AND OF ENSURING PROPER ALIGNMENT ON ALL PLANES OF THE FINAL STRUCTURE.
5. THE CONTRACTOR SHALL GIVE DUE AND LEGAL NOTICE TO ADJACENT PROPERTY OWNERS REGARDING THE PROTECTION OF THEIR PROPERTY AND STRUCTURES, WHICH MAY BE NECESSARY DUE TO EXCAVATION AND CONSTRUCTION INDICATED ON THESE PLANS, IN DUE TIME PRIOR TO THE START OF THE EXCAVATION.
6. OBSERVATION VISITS TO THE SITE BY FIELD REPRESENTATIVES OF THE ENGINEER OR BY THE ENGINEER RECORD SHALL NOT INCLUDE INSPECTION OF THE PROTECTIVE MEASURES OR THE CONSTRUCTION PROCEDURES REQUIRED FOR THE SAME.
7. ANY SUPPORT SERVICES PERFORMED BY THE ENGINEER OR A REPRESENTATIVE OF THE ENGINEER DURING CONSTRUCTION SHALL BE DISTINGUISHED FROM CONTINUOUS AND DETAILED INSPECTION SERVICES WHICH ARE FURNISHED BY OTHERS.
8. SUPPORT SERVICES PERFORMED BY THE ENGINEER OR A REPRESENTATIVE OF THE ENGINEER, WHETHER MATERIAL OR WORK AND WHETHER RENDERED PRIOR TO, DURING OR AFTER COMPLETION OF CONSTRUCTION, ARE PERFORMED SOLELY FOR THE PURPOSE OF ASSISTING IN QUALITY CONTROL AND IN ACHIEVING CONFORMANCE WITH CONSTRUCTION DRAWINGS AND SPECIFICATIONS, BUY THEY DO NOT GUARANTEE CONTRACTOR'S PERFORMANCE AND SHALL NOT BE CONSTRUED AS SUPERVISION OF CONSTRUCTION.
9. THE STRUCTURAL PLANS SHALL BE USED IN CONJUNCTION WITH THE ARCHITECTURAL, MECHANICAL AND ELECTRICAL PLANS. THE STAMPED APPROVED STRUCTURAL SET OF PLANS SHALL BE KEPT ON THE JOB SITE AND BE MADE AVAILABLE TO AUTHORIZED REPRESENTATIVES FROM THE DEPARTMENT OF BUILDING AND SAFETY.
10. ALL WORK TO CONFORM TO GUIDELINES SET FORTH ON THE LATEST REVISION OF THE UNIFORM BUILDING CODE (UBC). ALL ASTM SPECIFICATIONS NOTED ON THESE PLANS SHALL BE OF THE LATEST REVISION.
11. WHERE CONTINUOUS INSPECTION IS REQUIRED IT SHALL BE PERFORMED BY A REGISTERED DEPUTY INSPECTOR WHOSE QUALIFICATIONS AND PERFORMANCE ON THE JOB SHALL BE SUBJECT TO THE APPROVAL OF THE DEPARTMENT OF BUILDING AND SAFETY.
12. HARDWARE CALL OUTS MAY BE SUBSTITUTED BY EQUIVALENT HARDWARE ONLY UPON THE APPROVAL OF THE ENGINEER. THE ENGINEERING CATALOG OR BROCHURE OF THE EQUIVALENT HARDWARE AND THE L. A. R. R. NUMBERS FOR THE ITEMS REQUESTING SUBSTITUTION MUST BE SUBMITTED TO THE ENGINEER WHEN REQUESTING THE SUBSTITUTION.
13. NO DEVIATIONS WILL BE MADE FROM THE STRUCTURAL PLANS AND DETAILS WITHOUT THE WRITTEN APPROVAL OF THE STRUCTURAL ENGINEER. APPROVAL BY THE CITY INSPECTOR DOES NOT CONSTITUTE AUTHORITY TO DEVIATE FROM THE PLANS AND / OR SPECIFICATIONS.
14. REFER TO ALL "NOTES" ON OTHER STRUCTURAL SHEETS. IN CASE OF CONFLICT, "NOTES" TAKE PRECEDENCE OVER SPECIFICATIONS AND CONTACT THE ENGINEER.
15. THE WORD: "TYPICAL" , AS IT IS USED ON THE PLANS, SPECIFICATIONS, NOTES AND DETAILS REFERS TO ITEMS OUTLINED ON THOSE DOCUMENTS AND THAT REPEAT THEMSELVES OR ARE SIMILAR ELSEWHERE ON THOSE DOCUMENTS.
16. THE CONTRACTOR SHALL NOTIFY THE ENGINEER OF ANY DISCREPANCIES ON THE PLANS BEFORE PROCEEDING WITH THE PROJECT.
17. SHORING PLANS, IF REQUIRED, SHALL BE PROVIDED BY OTHERS.
18. REFER TO THE ARCHITECTURAL PLANS FOR ALL BUILDING DIMENSIONS. SHEAR WALL DIMENSIONS ARE MINIMUM REQUIRED, THE ACTUAL WALL DIMENSIONS MAY BE GREATER.
19. THE CONTRACTOR SHALL VERIFY WITH THE ARCHITECT THE FINISH ELEVATIONS AND HEIGHTS OF ALL BEAMS, COLUMNS AND POSTS.
20. THE CONTRACTOR SHALL VERIFY THE ADEQUACY OF ALL STRUCTURAL CONNECTIONS TO ACHIEVE ITEM 19 AND VERIFY THEIR FIT WITHIN FLOOR AND WALLS BEFORE PROCEDING WITH THE WORK. CONTACT THE ARCHITECT AND ENGINEER FOR ANY DISCREPANCIES.

NOMENCLATURE

A.B.:	ANCHOR BOLTS	FJ:	FLOOR JOIST	RB:	ROOF BEAM
ALT.:	ALTERNATE	FLR.:	FLOOR	R.B.:	REINFORCEMENT BARS
B :	BASE	FND.:	FOUNDATION	REQ.:	REQUIRED
BLK:	BLOCKING	GA:	GAUGE	RJ:	ROOF JOIST
BM:	BEAM	HOR.:	HORIZONTAL	RR:	ROOF RAFTER
BN:	BOUNDARY NAILING	HS:	HIGH STRENGTH	RW:	REGULAR WEIGHT
BOT.:	BOTTOM	L:	LINTEL	SIM:	SIMILAR
B.PL.:	BASE PLATE	LB:	LOFT BEAM	SS:	STAIRS STRINGER
CJ:	CEILING JOIST	LJ:	LOFT JOIST	STIFF.:	STIFFENER
COL.:	COLUMN	LL:	LIVE LOAD	STL.:	STEEL
CONC.:	CONCRETE	LW:	LIGHT WEIGHT	SW:	SHEAR WALL
CONT.:	CONTINUOUS	MAX.:	MAXIMUM	T.O.S.:	TOP OF STEEL
DBL:	DOUBLE	M.B.:	MACHINE BOLT	TS:	TUBULAR STEEL
DET.:	DETAIL	MIN.:	MINIMUM	TYP.:	TYPICAL
DIA.:	DIAMETER	(N):	NEW	U.N.O.:	UNLESS NOTED OTHERWISE
DL:	DEAD LOAD	NTS:	NOT TO SCALE	VERT.:	VERTICAL
(E):	EXISTING	PL.:	PLATE	W:	WITH
EA.:	EACH	PLY.:	PLYWOOD	W/O:	WITHOUT
EN:	EDGE NAILING				
EQ.:	EQUAL				

ROOF DIAPHRAGM: 1/2" PLYWOOD, STRUCTURAL I, CDX GRADE, 32/16 INDEX, WITH BOUNDARY AND EDGE NAILING: 10d @ 6" o. c. , INTERMEDIATE NAILING: 10d @ 12" o.c.

2nd FLOOR : 5/8" PLYWOOD, STRUCTURAL I, CDX GRADE, 32/16 INDEX, TONGUE AND GROVE , WITH BOUNDARY AND EDGE NAILING 10d @ 6" o.c., INTERMEDIATE NAILING 10d @ 10" o.c.

1st FLOOR : CONCRETE SLAB ON GRADE, PER PLANS.

FOUNDATIONS

1. CONCRETE SHALL HAVE AN ULTIMATE STRENGTH OF 2500 psi AT 28 DAYS. NO INSPECTION IS REQUIRED.
2. FOR CONCRETE GRADE BEAMS AND OVERTURNING PADS THE CONCRETE ULTIMATE STRENGTH (f' c) IS 3,000 psi AT 28 DAYS. CONTINUOUS INSPECTION BY A DEPUTY INSPECTOR IS REQUIRED FOR CONCRETE WITH AN ULTIMATE STRENGTH GREATER THAN 2,500 psi.
3. REINFORCING STEEL SHALL CONFORM TO ASTM A615 AND DEFORMATION TO A-305, GRADE 60, CLEAN AND FREE OF RUST.
4. LAPS AT SPLICES AND POUR LINES TO BE 48 BAR DIAMETERS OR 30 in. WHICHEVER IS GREATER. BARS TO BE WIRED TOGETHER.
5. SLAB ON GRADE SHALL BE A MINIMUM OF (SEE PLAN FOR SPECS)
6. ALL INTERIOR SLAB ON GRADES, EXCEPT AT GARAGES, SHALL BE UNDERLAIN BY 4" OF SAND AND UNDERNEATH THE SAND A VAPOR BARRIER PER THE GEOTECHNICAL SPECIFICATIONS OF THE ARCHITECTURAL PLANS AND NO LESS THAN A 6 - mil BLACK POLYETHYLENE OR VISQUEEN VAPOR BARRIER.
7. PORTLAND CEMENT SHALL BE TYPE I OR II, CONFORMING TO ASTM C-150. READY MIXED CONCRETE SHALL CONFORM TO ASTM C-94.
8. AGGREGATES: ASTM C-33. MAXIMUM SIZE 1 1/2" FOR FOOTINGS AND 1" FOR ALL OTHER WORK.
9. DOWELS TO BE PROVIDED FOR ALL VERTICAL AND HORIZONTAL REINFORCING BARS IN WALLS , COLUMNS, BEAMS, FOOTINGS, ETC. AND TO BE OF THE SAME SIZE AND NUMBER AS THAT FROM THE FOOTINGS, WALLS, SUPPORTING BEAMS AND / OR COLUMNS.
10. REINFORCING CLEARANCES FOR FOUNDATIONS ARE:
    10.1 FOR CONCRETE POURED AGAINST EARTH.....3"
    10.2 FORMED SURFACES.....2"
11. REMOVAL OF FORMS:
    11.1 SUPPORTING VERTICAL SURFACES: 7 DAYS MINIMUM.
    11.2 SUPPORTING BEAMS AND GIRDERS: 15 DAYS MINIMUM.
12. CONSTRUCTIONS JOINTS SHALL BE PREPARED BY WIRE BRUSHING, CLEANING AND APPLYING ON A PASTE OF NEAT CEMENT MORTAR IMMEDIATELY PRIOR TO POURING. LOCATION OF CONSTRUCTION JOINTS SHALL BE APPROVED BY THE STRUCTURAL ENGINEER.
13. IN THE EVENT EXCAVATION REVEAL UNFAVORABLE CONDITIONS, THE SERVICES OF A GEOTECHNICAL ENGINEER AND / OR GEOLOGIST MAY BE REQUIRED.
14. ALL REINFORCING STEEL, ANCHOR BOLTS, DOWELS AND OTHER INSERTS SHALL BE SECURELY FASTENED IN THE FORMS BEFORE MAKING THE POUR.
15. EXPANSIVE SOIL REQUIREMENTS:

    IF SOIL IS FOUND TO BE EXPANSIVE, THE FOOTINGS MUST MEET THE FOLLOWING MINIMUM REQUIREMENTS:

    a) THE DEPTH OF FOOTINGS BELOW THE NATURAL AND FINISH GRADES SHALL NOT BE LESS THAN 24 INCHES FOR EXTERIOR AND 18 INCHES FOR INTERIOR FOOTINGS.

    b) EXTERIOR WALLS AND INTERIOR BEARING WALLS SHALL BE SUPPORTED ON CONTINUOUS FOOTINGS.

    c) FOOTINGS SHALL BE REINFORCED WITH A MINIMUM OF 4 - 1/2 INCH DIAMETER DEFORMED REINFORCING BARS. 2 BARS SHALL BE PLACED 4 INCHES OF THEN BOTTOM OF THE FOOTING AND 2 BARS WITHIN 4 INCHES OF THE TOP OF THE FOOTINGS.

    d) THE SOIL BELOW AN INTERIOR CONCRETE SLAB SHALL BE SATURATED WITH MOISTURE TO A DEPTH OF 18 INCHES PRIOR TO PLACING THE CONCRETE.

TIMBER

1. HORIZONTAL FRAMING 2X AND SMALLER SHALL BE DOUGLAS FIR-LARCH # 2 OR BETTER. 4X AND LARGER TO BE DOUGLAS FIR - LARCH # 1 OR BETTER. POSTS SHALL BE DOUGLAS FIR - LARCH # 1 OR BETTER. STUDS: EXTERIOR WALLS SHALL BE 2 X 6 DOUGLAS FIR - LARCH # 2 OR BETTER @ 16" o. c., ALL OTHER WALLS SHALL BE 2 X 4 DOUGLAS FIR - LARCH # 2 OR BETTER @ 16" o. c., NON BEARING WALLS SHALL BE 2 X 4 #2 @ 24" o. c., STUDS SIZE AND SPACING IS AS INDICATED U.N.O. ON THE PLANS.
2. SILL ON CONCRETE SHALL BE PRESSURE TREATED DOUGLAS FIR # 2 AND SHALL BE BOLTED TO A CONCRETE FOUNDATION WITH 5/8" DIA. BOLTS WITH 9" EMBEDMENT AT 36" o.c., U. N. O. AND NOT MORE THAN 6" FROM ENDS, WITH A MINIMUM OF 2 BOLTS TO ANY PIECE.
3. BOLTS IN TIMBER SHALL HAVE STANDARD CUT WASHERS, U. N. O. AND EXCEPT WHEN USED WITH STEEL PLATES OR ANGLES. FROM ENDS, WITH A MINIMUM OF 2 BOLTS TO ANY PIECE.
4. NAILS SHALL BE COMMON WIRE NAILS.
5. STRUCTURAL HARDWARE CALLOUTS (JOIST HANGERS, POST BASES AND ALL OTHER SIMILAR HARDWARE) ARE FROM THE SIMPSON STRONG -TIE CO. INC. LATEST CATALOG.
6. PLYWOOD SHEATHING SHALL BE GRADE C. D. X., STRUCTURAL I , GRADED AND MARKED BY THE D. F. P. A. ALL HORIZONTAL PLYWOOD SHALL BE LAID WITH THE FACE GRAIN PERPENDICULAR TO THE JOISTS AND WITH STAGGERED JOINTS . THE MINIMUM DIMENSION OF PLYWOOD SHEETS USED IN FLOOR AND ROOF DIAPHRAGMS OR SHEAR WALLS SHALL BE 2 ft.x 4 ft. PLYWOOD DIAPHRAGM NAILING SHALL BE INSPECTED AND APPROVED BEFORE COVERING IS APPLIED. NAILS SHALL BE DRIVEN FLUSH, NO SINKING OF NAIL HEADS IS ALLOWED.
7. THE PLYWOOD SHEATHING REFERRED TO ON ITEM No 6 MAY BE SUBSTITUTE WITH OSB BOARD WITH THE SAME OR GREATER STRENGTH, CHARACTERISTICS AND QUALITY THAN THE PLYWOOD IT SUBSTITUTES. APPROVAL FROM THE DEPARTMENT OF BUILDING AND SAFETY IS REQUIRED.
8. ALL FLUSH FRAMED JOISTS SHALL SIT ON SIMPSON LUS JOIST HANGERS.
9. WALL BRACING SHALL BE PROVIDED IN ALL WALLS NOT OTHERWISE BRACED. BRACING SHALL BE A 1 X 6 DIAGONAL LET-IN BRACE AT EACH END AND AT 25 ft. INTERVALS. EACH BRACE SHALL COVER 4 STUD SPACES AND WILL BE NAILED TO TOP AND BOTTOM PLATES WITH 3-8d NAILS. SIMPSON COMPRESSION WALL BRACING (CWB) MAY BE SUBSTITUTED FOR LET IN BRACE.
10. NAILING FOR CONNECTING WOOD MEMBERS SHALL COMPLY WITH THE REQUIREMENTS AND SPECIFICATIONS OF TABLE No 23-II-B-1 "NAILING SCHEDULE" FROM THE CURRENT UBC AND LABC CODE.
11. A LICENSED FABRICATOR IS REQUIRED FOR ALL GLUE LAMINATED BEAMS. Fb = 2400psi. Fv = 165 psi. E = 1800 ksi. GLUE LAMINATED BEAM SHALL NOT BE SUBSTITUTE BY WOOD BEAMS. INDUSTRIAL APPEARANCE ACCEPTABLE FOR BEAMS NOT EXPOSED. EXPOSED BEAMS SHALL HAVE ARCHITECTURAL APPEARANCE.
12. LAG SCREWS SHALL BE TURNED, NOT DRIVEN, INTO PRE - DRILLED HOLES 2/3 OF THE SHANK DIAMETER.
13. LAG SCREW BENDING YIELD STRENGTHS (Fyb) ARE:
    Fyb = 70 ksi FOR DIAMETER = 1/4 INCH
    Fyb = 60 ksi FOR DIAMETER = 5/16 INCH
    Fyb = 45 ksi FOR DIAMETER >= 3/8 INCH
14. SPLICES ON TOP PLATES SHALL HAVE A MINIMUM OF 4 ft. LAP SPLICE WITH 16-16d NAILS.
15. ALL BEAMS SHALL BE SUPPORTED ON POSTS. FOR 4 X 8 # 1 BEAMS AND SMALLER BEAMS USE 2 - 2 X 4 STUDS U. N. O. FOR LARGER BEAMS A 4 X MIN. POST SHALL BE USED. ALL POSTS TO PROVIDE FULL BEARING FOR THE BEAMS AND SHALL CONTINUE THROUGH THE FLOORS UNTIL A BEAM OR FOUNDATION IS ENCOUNTERED.
16. TJI TRUS JOIST CORPORATION, ICC-ESR-1153.
17. 2 X SPACED DECKING NAILING IS 2 - 16d NAILS PER BEARING. "STRONG-HOLD" TYPE NAILS ARE RECOMMENDED.
18. THE FOLLOWING SCHEDULE APPLIES TO ALL HEADERS AND LINTELS
    U. N. O. : OPENING 4' -0" OR LESS : 4 X 6 # 1
    OPENING 4' -0" TO 5' -0" : 4 X 8 # 1
    OPENING 5' -0" TO 7' -0" : 4 X 10 # 1
19. DOUBLE 2 X JOISTS ARE REQUIRED UNDER ALL NON BEARING WALLS PARALLEL TO FLOOR FRAMING.
20. ALL STUD WALL SHALL BE FIRE STOPPED WITH 2" THICK MATERIAL AT THE FLOOR, CEILING AND MID-HEIGHT WITH 8 FEET MAXIMUM BETWEEN BLOCKING. STAIR STRINGERS SHALL BE FIRE BLOCKED AT EACH END AND AT MID FLIGHT AND PER ARCHITECT'S PLANS AND DETAILS.
21. PROVIDE 2 X FULL DEPTH CONTINUOUS BLOCKING BETWEEN JOIST AT ALL POINTS OF SUPPORT. PROVIDE 2 X FULL DEPTH CONTINUOUS BLOCKING OR 2" X 3" CROSS BRIDGING OR APPROVED METAL CROSS BRIDGING BETWEEN FLOOR JOISTS DEEPER THAN 4" AND RAFTERS OVER 6" DEEP AND SHALL OCCUR IN LINE 8' -0" o. c. MAX . SUBSTITUTE 2 X BLOCKING WITH TJI TRUS JOIST BLOCKING WHEN THIS PRODUCT IS BEING USED.
22. AFTER WOOD SHRINKAGE HAS OCCURRED, TIGHTEN ALL CONNECTIONS TO WOOD: BOLTS, HANGERS, ETC., BEFORE APPLYING FINISH.
23. VALVES CONNECTING TO RISERS SHALL BE PLACED SO AS TO PERMIT MOVEMENT OF THE STRUCTURE.
24. HOLES BORED IN STUDS TO PERMIT THE PASSAGE OF PIPING SHALL BE DRILLED 3/4 INCH OVERSIZE AND THE PIPING INSTALLED AT THE BOTTOM OF THE HOLES.
25. WHERE PLASTER, DRYWALL OR TILE IS INSTALLED AROUND HORIZONTAL PIPING, PROVIDE FOR MOVEMENT BY HAVING A CLEAR SPACE TO THE PIPE LINES TO PERMIT DOWNWARD MOVEMENT OF THE STRUCTURE.
26. VENTS SHALL BE INSTALLED WITH DOUBLE FLASHING WHICH WILL PERMIT MOVEMENT AND PROVIDE WATER TIGHTNESS OF THE INSTALLATION.
27. PROVIDE HORIZONTAL SCREEDS IN STUCCO AT THE ELEVATION AT THE TOP OF THE FLOOR JOISTS.
28. ITEMS No 22. -26. ARE MINIMUMS AND SHALL BE REPLACED BY A MORE STRINGENT REQUIREMENT PROVIDED BY THE ARCHITECTURAL , MECHANICAL AND ELECTRICAL PLANS AND OR UBC OR LABC CURRENT CODES.
29. ALL BEAMS MADE UP OF MULTIPLE JOISTS SHALL BE SPIKED WITH 20d NAILS STAGGERED AT 6" o. c. FOR BEAMS 10" OR LESS IN DEPTH AND 8" o. c. FOR BEAMS WITH GREATER DEPTHS OR WITH 1/2" DIAMETER BOLTS STAGGERED TOP AND BOTTOM AT 18" o. c. WITH 3" CLEAR FROM EDGES AND ENDS.
30. ALL MACHINE BOLTS SHALL CONFORM TO ASTM - 307. ALL EXPOSED NAILS SHALL BE HOT DIPPED GALVANIZED.
31. ALL 1ST FLOOR SILL PLATES TO BE PRESSURE TREATED.
32. THE CONTRACTOR SHALL OBTAIN A JOIST LAYOUT PLAN AND DETAILS PLAN (S) FROM THE PREFABRICATED JOIST MANUFACTURER: TRUS JOIST MacMILLAN AND PROVIDE COPIES OF THESE PLANS TO ALL PERTINENT CITY AGENCIES AND TO THE ENGINEER AND THE ARCHITECT.
33. CARE SHALL BE TAKEN UPON THE RECEIPT OF THE PREFABRICATED WOOD JOISTS TO THE JOB SITE, IN THAT THEY ARE OF LOADED, STORED ON RAISED BLOCKING AND THAT THEY ARE RAISED AND PLACED WITH PROPER LIFTING EQUIPMENT.
34. USE FULL LENGTH STUDS ON EXTERIOR / INTERIOR WALLS OF ROOMS WITH VAULTED CEILINGS.
35. HIP, VALLEY AND RIDGE BOARDS TO BE BRACED WITH A 2 x 4 BRACE AT EVERY 6 FEET AND ALL BRACES SHALL BE SUPPORTED ON 2-2 x CEILING JOISTS OR A WALL BELOW. NAIL BRACES WITH 3-16d NAILS AT EA. END. ROOF BRACES BETWEEN 6FT - 8FT SHALL BE 2 x 8 NAILED WITH 4-16d NAILS AT EACH END. PROVIDE A 2x BRACE AT VERTICES. PURLINS AND ALL OTHER BRACING TO COMPLY WITH THE LOS ANGELES DEPARTMENT OF BUILDING AND SAFETY (LADBS) TYPE V SHEET.
36. REFER TO THE ARCHITECTURAL PLANS FOR ALL BUILDING DIMENSIONS.

NOTES

1. PLYWOOD DIAPHRAGMS : PRODUCT STANDARD PS 1 - 95, DOUGLAS FIR-LARCH , STRUCTURAL I.
2. PARTICLE BOARD : ANSI A208. 1-1989. MOISTURE PROTECTION IS REQUIRED.
3. WOOD FRAMING MEMBERS: GRADE AND SPECIES OF ALL LUMBER SHALL BE GRADE MARKED.
4. GLUE LAMINATED BEAMS (GLB) SHALL BE FABRICATED IN A LOS ANGELES CITY BUILDING DEPARTMENT LICENSED SHOP. PER 1997 NDS: COMBINA-SYMBOL FOR GLB IS 24F - V4 AND LAMINATION SPECIES IS DF/DF.
5. FIELD WELDING SHALL BE DONE BY A CERTIFIED WELDER FOR STRUCTURAL STEEL, REIN-FORCING STEEL AND LIGHT GAGE STEEL. CONTINUOUS SPECIAL INSPECTION IS REQUIRED.
6. STEEL: STRUCTURAL STEEL ASTM (A36) A(992). STRUCTURAL PIPE IS ASTM A53 , GRADE B. STRUCTURAL TUBE ASTM A501. REINFORCING BARS ASTM A615.
7. SHOP WELDS SHALL BE PERFORMED IN A CERTIFIED CITY BUILDING DEPARTMENT LICENSED FABRICATOR'S SHOP.
8. LAG BOLTS : PROVIDE A LEAD HOLE 40% - 70% OF THE THREADED SHANK DIAMETER AND FULL DIAMETER FOR THE SMOOTH SHANK PORTION.

S P E C I F I C A T I O N S

CONCRETE	STANDARD GRADE f'c= 2500 PSI
CONCRETE BLOCK	GRADE N PER ASTM C-90 (NO SPECIAL INSPECTION UNO)
MORTAR	TYPE S 1:1/2:4 CEMENT TO LIME TO SAND
GROUT	1:3:2 CEMENT TO SAND TO PEA GRAVEL f'c=2000 PSI
REINFORCING STELL	PER ASTM A-615
STRUCTURAL STELL	SHAPES PER ASTM A-36
	COLUMS PER ASTM A-53 GRADE B
BOLTS	PER ASTM A-307
WELDING	ALL FIELD WELDING BY CERTIFY WELDER E-70 XX ELECTRODES
LUMBER	DOUGLAS FIR GRADING PER WCLIB RULE # 16
	SIZE PER PS 20-70
	JOIST, PLANKS, GRADE #2 OR BETTER
	POSTS & BEAMS GRADE #1 OR BETTER
PLYWOOD	PER PSI - 95 WITH EXTERIOR TYPE GLUE
ROOF DIAPHRAGM	1/2" CDX W/8d @ 6:12
FLOOR DIAPHRAGM	5/8" CDX W/ 10d @ 6:10
SOIL	PER UBC T-18/A

"WOOD FRAMING MEMBERS:GRADE AND SPECIES OF ALL LUMBER."MUST BE GRADE MARKED."

NOTES:

GLUE LAM BEAMS MUST BE FABRICATED IN A LADBS LICENCED SHOP, IDENTIFY GRADE SYMBOL AND LAMINATION SPECIES.

PROVIDE LEAD HOLE 40%-70% OF THREADED SHANK DIA. AND FULL IDA. FOR SMOOTH SHANK PORTION."

PERIODIC SPECIAL INSPECTION IS REQUIRED FOR WOOD SHEAR WALLS, SHEAR PANELS, AND DIAPHRAGMS, INCLUDING NAILING, BOLTING, ANCHORING, AND OTHER FASTENING TO COMPONENTS OF THE SEISMIC FORCE RESISTING SYSTEM. SPECIAL INSPECTION BY A DEPUTY INSPECTOR IS REQUIRED WHERE THE FASTENER SPACING OF THE SHEATHING IS 4 INCHES ON CENTER OR LESS.

STUDS SUPPORTING TWO FLOORS, CEILING, AND ROOF MUST BE 3X4 OR 2X6 AT 16-IN. O.C.

NOTES:

1. ALL SILL NAILING SHALL BE STAGGERED 1/2" MINIMUM, TYPICAL
2. WHEN A SHEARWALL IS SPECIFIED ON BOTH SIDES OF A WALL, ALL SLIDING ANCHOR CONNECTORS SHALL BE ATTACHED WITH SPACINGS FROM THE TABLE ABOVE TO BE REDUCED BY HALF.

LICENSED PROFESSIONAL ENGINEER MARTIN H. SANDOVAL C 56905 EXP. 06/30/27 CIVIL STATE OF CALIFORNIA

County of Los Angeles
DEPARTMENT OF PUBLIC WORKS
BUILDING & SAFETY DIVISION
Los Angeles Regional Uniform Code Program

STRUCTURAL OBSERVATION PROGRAM
AND DESIGNATION OF THE
STRUCTURAL OBSERVER

PERMIT APPL. NO.: _____

Project Address:	13828, 13828 1/2 CREWE ST		
Description of Work:	NEW 2-STORY S.F.D.& 2-STORY ADU		
Owner:	SALVADOR POLINA	Architect:	
Engineer of Record:	MARTIN SANDOVAL P.E.		

STRUCTURAL OBSERVATION (ONLY CHECKED ITEMS ARE REQUIRED)

Firm or Individual to be responsible for the Structural Observation:
Name: Wilfrido Rodriguez Phone: (562)314-5500 Calif. Registration: C 56905

FOUNDATION	WALL	FRAME	DIAPHRAGM
☒ Footing, Stem Walls, Piers	☐ Concrete	☐ Steel Moment Frame	☐ Concrete
☐ Mat Foundation	☐ Masonry	☐ Steel Braced Frame	☐ Steel Deck
☐ Caisson, Piles, Grade Beams	☒ Wood	☐ Concrete Moment Frame	☒ Wood
☐ Retaining Foundation Hillside Special Anchors	☐ Others:	☐ Masonry Wall Frame	☐ Others:
☐ Others:		☒ Others: WOOD	

DECLARATION BY OWNER

I, the Owner of the project, declare that the above listed firm or individual is hired **by me** to be the Structural Observer.

Signature 9-30-24 Date

DECLARATION BY ARCHITECT OR ENGINEER OF RECORD
(required if the Structural Observer is different from the Architect or Engineer of Record)

I, the Architect or Engineer of record for the project, declare that the above listed firm or individual is designated by me to be responsible for the Structural Observation.

N/A ENGINEER OF RECORD WILL BE PREFORMING STRUCTURAL OBSERVATION

Signature License No. Date

Version 1.0 (2020 LACBC) Apr. 14 2020

County of Los Angeles
DEPARTMENT OF PUBLIC WORKS
BUILDING & SAFETY DIVISION

STRUCTURAL OBSERVATION GENERAL NOTES

1. Structural observation is required for the structural system in accordance with Section 1704.6 of the Los Angeles County Building Code. Structural observation is the visual observation at the construction stages and the complete structure for general conformance to the approved plans and specifications. Structural observation does not waive the responsibility for the inspections required of the building inspector or the special inspector.
2. The owner shall employ the registered design professional responsible for the structural design, or another registered design professional designated by the registered design professional responsible for the structural design to perform structural observations.
3. The owner or owner's representative shall coordinate and call for a meeting between the engineer or architect responsible for the structural design, structural observer, contractor, affected subcontractors and special inspectors. The purpose of the meeting shall be to identify the major structural elements and connections that affect the vertical and lateral load systems of the structure and to review scheduling of the required observations. A record of the meeting shall be included in the first observation report submitted to the building inspector.
4. The structural observer shall prepare a report of the Structural Observation Report Form for each significant stage of construction observed. The original of the Structural Observation report shall be shall be sealed and signed by the responsible structural observer and sent to the Building and Safety District Office. Copies of the report shall also be given to the owner, contractor, and special inspector. Any deficiency noted on the observation report will become the responsibility of the structural engineer of record to verify its completion by him (her), or by a registered special inspector at the discretion of the Structural Observer.
5. A final observation report must be submitted which shows that all observed deficiencies were resolved and structural system generally conforms with the approved plans and specifications.
6. When the owner elects to change the structural observer of record, the owner shall:
   a) Notify the building inspector in writing before the next inspection by submitting the completed Structural Observation Program and Designation of the Structural Observer form.
   b) Call an additional preconstruction meeting
   c) Furnish the replacement structural observer with a copy of all previous observation reports. The replacement structural observer shall approve the correction of the original observed deficiencies unless otherwise approved by the Building Official.
7. The engineer or architect of record shall address all changes relating to the structural systems. The Building Official shall review and approved all changes to the approved plans and specifications.

BUILDING AND SAFETY DIVISION
Department of Public Works
APPROVED
UNDER LOS ANGELES COUNTY CODE
TITLES 26, 30 AND 31
DMcCombs
PUBLIC WORKS
04/08/2026 11:18:30 AM
This set of plans and specifications must be kept at the job site at all times and it is unlawful to make any changes, modifications or alterations to these plans or specifications without the prior written permission of the Building Official. The approval of these plans and specifications does not permit, nor shall it be deemed to permit, under any circumstances, the deemed to permit or to be an approval of any work or activity that violates any provisions of any County Ordinance or State Law

REVISIONS	BY
2/25/2026	C.L.

Plans drawn by:

G P. FOX DRAFTING INC.

RESIDENTIAL DRAFTING
8050 E. FLORENCE AVE, SUITE.27
DOWNEY, CA 90240
(562) 928-5467
email: gpfoxdesign@verizon.net

GENERAL NOTES

1. VERIFY MEASUREMENTS WITH CORRESPONDING COSTRUCTED OR EXISTING CONDITIONS PRIOR TO PROCEEDING WITH THE WORK, AND NOTIFY THE DRAFTSMAN IMMEDIATELY OF SIGNIFICANT DISCREPANCIES.
2. FINISH ELEVATIONS REFERENCED ON THE DRAWINGS ARE DATUM ELEVATIONS ABOVE THE FINISH FLOOR ELEVATION. THE CONTRACTOR MUST COORDINATE DATUM-BASED ELEVATIONS SHOWN WITH SITE-SPECIFIC ELEVATIONS SHOWN ON CIVIL DRAWINGS.
3. WALL DIMENSIONS SHOWN ARE TO FACE OF WALL FINISH UNLESS SPECIFICALLY NOTED OTHERWISE.

Project:
PROPOSED NEW 2-STORY S.F.D. AND AN ADU

Sheet Title:
STRUCTURAL NOTES

Project for:
SALVADOR POLINA

Project Address:
13828, 13828 1/2 CREWE ST WHITTIER , CA.90605

Checked	G.P.
Job no.	----
Drawn	J.P.M
Date	03/19/2024

SHEET:
SN1

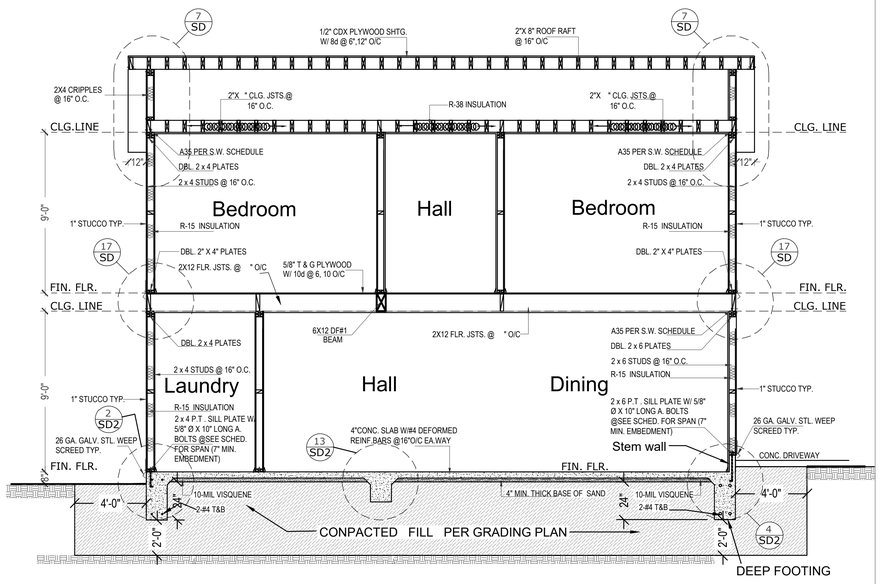

CROSS SECTION X

SCALE: 1/4"=1'-0"

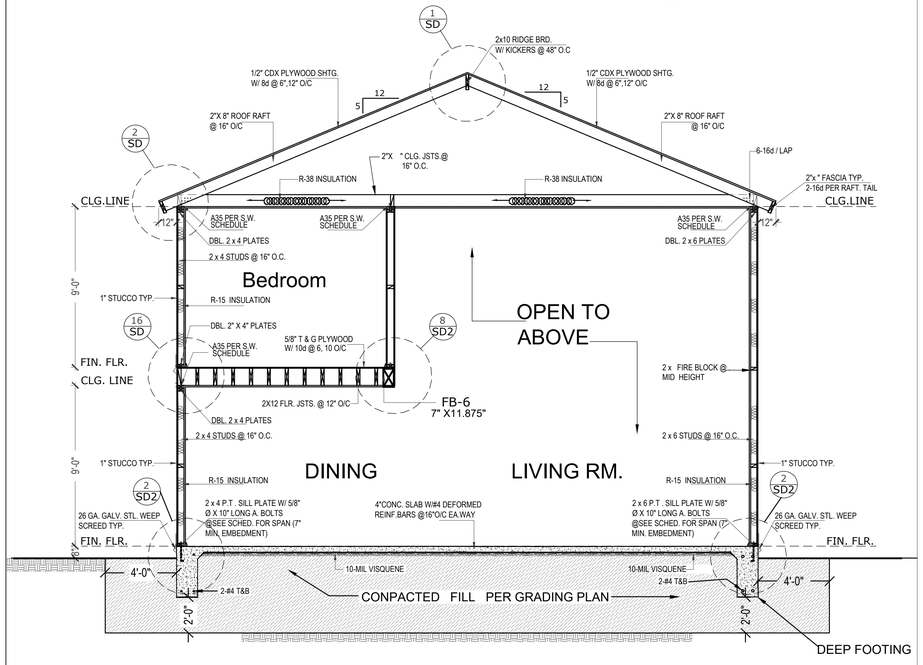

CROSS SECTION Y

SCALE: 1/4"=1'-0"

Roof plan Key Notes:

1. 24"X12" G.S. DORMER VENTS TYP.
2. (1) TANKLESS WATER HEATER LOCATION
3. PLUMBING ROUTE FROM SOLAR PANEL TO W/H
4. (1)200 AMP ELECTRICAL PANEL LOCATION
5. ELECTRICAL LINE ROUTE FROM INVERTER TO ELEC.
6. LOCATION OF INVERTERS AND METERING EQUIPMENT PLUMBING
7. TERMINATION OF 1" CONDUIT FOR INSTALATION OF ELECTRICAL SOLAR PANELS
8. MIN. 250 S.F. CONTIGUOUS UNOBSTRUCTED AREA ON ROOF FOR INSTALLATION OF ELECTRICAL SOLAR PANELS
9. 48"X48" SMOKE VENT
10. RAIN WATER DOWNSPOUT
11. 17" WIDE 130 GAL. BUSMAN RAIN TANK

NOTE:
THE MAIN ELECTRICAL SERVICE PANEL SHALL HAVE A RESERVED SPACE TO ALLOW FOR INSTALLATION OF A DOUBLE POLE CIRCUIT BREAKER FOR A SOLARE ELECTRIC INSTALLATION. THE RESERVED SPACE SHALL BE POSITIONED AT THE OPPOSITE (LOAD) END FROM THE INPUT FEEDER LOCATION OR MAIN CIRCUIT LOCATION AND SHALL BE PERMANENTLY MARKED AS "FOR FUTURE SOLAR ELECTRIC".

NOTE:
THE SOLAR ZONE SHALL BE FREE OF OBSTRUCTIONS AND BE SETBACK AT LEAST TWO TIMES THE HEIGHT OF ANY OBSTRUCTION, INCLUDING BUT NOT LIMITED TO, VENTS, CHIMNEYS, AND EQUIPMENT SOLAR ZONE SHALL BE ORIENTED BETWEEN 110° AND 270° OF THE TRUE NORTH

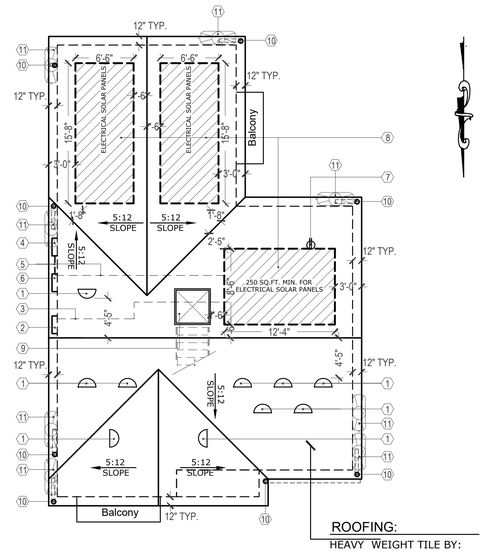

ROOF PLAN

SCALE: 1/8"=1'-0"

ROOFING:
HEAVY WEIGHT TILE BY:
EAGLE ROOFING
ICC ESR -1900

Eagle Cool Roof Tile

Eagle's ENERGY STAR and CRRC Rated Products Result in Energy Savings

Qualifying Products

Part No.	Product Weight	Profile	Name	Photo	Reflectance	Emittance	Solar Reflectivity Index
2800	Standard	Malibu	White on White*		79%	91%	99
4800	Standard	Bel Air	White on White*		79%	91%	99
3241	Standard	Capistrano	Sun Valley		71%	89%	87
4241	Standard	Bel Air	Sun Valley		71%	89%	87
2241	Standard	Malibu	Sun Valley		71%	89%	87

* May be manufactured with gray cement and a white color coat.

Note: The above rebate program is subject to change, and may be subject to additional requirements such as geographic location/climate zone, presence of a central air conditioning system, and other requirements. Homeowners and/or roofers are responsible for filing all necessary paperwork and dealing with the utility to receive rebates. Rebates are not guaranteed by Eagle Roofing Products. One square is 100 square feet. Rebate programs may be calculated either by square foot of roofing material or square foot of conditioned space, depending on each utility's program details. This rebate summary is provided only as a resource for roofers and homeowners. Should you have any questions about these programs, please contact your utility by phone or by visiting the website above. May be subject to inspection. Rebate programs are available on a first come, first serve basis and may expire without notice.

ENERGY STAR: When installed properly, this product will help reduce energy costs. Actual savings will vary based on geographic location and individual building characteristics. Consult your product manufacturer, roofing contractor, or call 1-888-STAR-YES (1-888-782-7937) for more information.

Manufacturing and Showrooms
Southern California • 800 300 3245 - Northern California • 800 998 3245 - Southwest • 800 346 5260 - Florida • 877 300 3245
Design Centers
Irvine, California • 949 553 8333 - Phoenix, Arizona • 602 546 1749 - Stockton, California • 209 932 2700 – Roseville, California • 916 789 4555
Boca Raton, Florida • 516 347 8180 - Orlando, Florida • 407 691 7100 – Clearwater, Florida • 727 531 2266

ROOFING:

HEAVY WEIGHT TILE BY:
EAGLE ROOFING
ICC ESR -1900
15 FELT USE GALV. ROOFING
NAILS (FIRE RETARDANT)
MAX. WEIGHT SHALL BE 12 PSF

INSTALLATION SHALL BE INACCORDANCE WITH MANUFACTURER'S SPECIFICATIONS

COOL ROOF:

* HEAVY WEIGHT TILE BY: EAGLE ROOFING
* WITH 3-YEAR SOLAR
* THERMAL EMITTANCE OF 0.89
* SUNVALLEY
* MANUFACTURER BRAND :EAGLE ROOFING
* CRRC PROD. ID :3241

"2-LAYERS OF GRADE "D" PAPER SHALL BE APPLIED OVER ALL WOOD BASE SHEATING."

LICENSED PROFESSIONAL ENGINEER MARTIN N. SANDOVAL C 56905 EXP. 06/30/27 CIVIL STATE OF CALIFORNIA

BUILDING AND SAFETY DIVISION
Department of Public Works
APPROVED
UNDER LOS ANGELES COUNTY CODE
TITLES 26, 30 AND 31
DMcCombs
PUBLIC WORKS
04/08/2026 11:18:30 AM

This set of plans and specifications shall be kept at the job site at all times, and it is unlawful to make any changes, modifications or alterations to these plans or specifications without the prior written permission of the Building Official. The approval of these plans and specifications shall not be construed to be, under any circumstances, be deemed to permit or to be an approval of any work or activity that violates any provisions of any County Ordinance or State Law.

REVISIONS	BY
2/25/2026	C.L.

Plans drawn by:
G P. FOX DRAFTING INC.
RESIDENTIAL DRAFTING
8050 E. FLORENCE AVE, SUITE.27
DOWNEY, CA 90240
(562) 928-5467
email: gpfoxdesign@verizon.net

GENERAL NOTES

1. VERIFY MEASUREMENTS WITH CORRESPONDING CONSTRUCTED OR EXISTING CONDITIONS PRIOR TO PROCEEDING WITH THE WORK, AND NOTIFY THE DRAFTSMAN IMMEDIATELY OF SIGNIFICANT DISCREPANCIES.
2. FINISH ELEVATIONS REFERENCED ON THE DRAWINGS ARE DATUM ELEVATIONS ABOVE THE FINISH FLOOR ELEVATION. THE CONTRACTOR MUST COORDINATE DATUM-BASED ELEVATIONS SHOWN WITH SITE-SPECIFIC ELEVATIONS SHOWN ON CIVIL DRAWINGS.
3. WALL DIMENSIONS SHOWN ARE TO FACE OF WALL FINISH UNLESS SPECIFICALLY NOTED OTHERWISE.

Project:
PROPOSED NEW 2-STORY S.F.D. AND AN ADU

Sheet Title:
SECTIONS & ROOF PLAN MAIN BLDG.

Project for:
SALVADOR POLINA

Project:
Address:
13828, 13828 1/2 CREWE ST WHITTIER , CA.90605

BLDR240320002527

Checked	G.P.
Job no.	----
Drawn	J.P.M
Date	03/19/2024

SHEET: 5 OF SHEETS

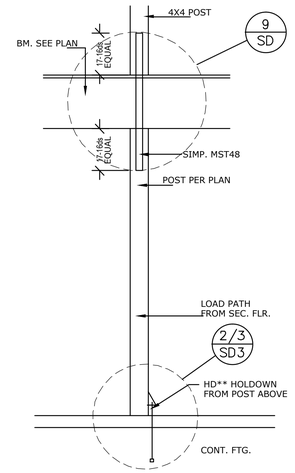

1 HOLDOWN DETAIL

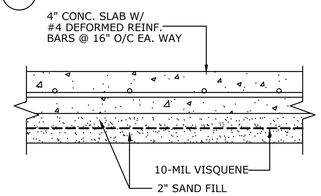

2 TYPICAL SLAB DETAIL

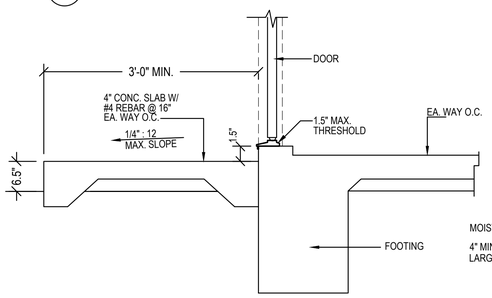

CONC. STEPS DETAIL - A

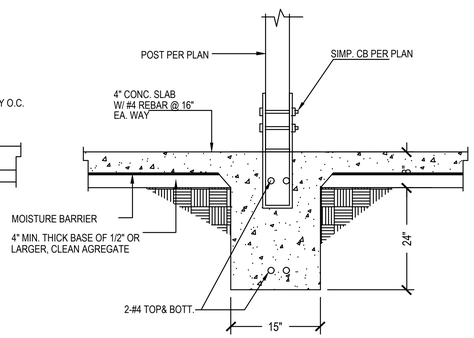

CB @ INT. FTG DETAIL-D

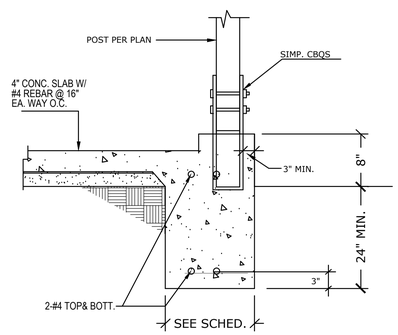

CB @GARAGE FTG. DETAIL-B

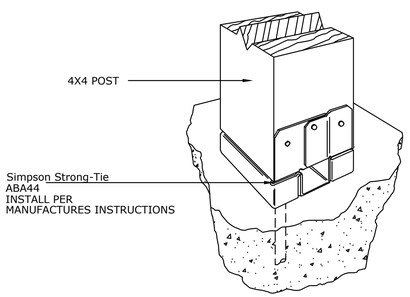

POST CONCRETE DETAIL-C

NOTES:

FASTENERS IN PRESERVATIVE TREATED WOOD OR FIRE RETARDANT TREATED WOOD SHALL BE OF HOT DIPPED ZINC COATED GALVANIZED STEEL OR STAINLESS STEEL.

"HOLD-DOWN CONNECTOR BOLTS INTO WOOD FRAMING REQUIRE 0.229-IN. X 3-IN. X 3-IN. PLATE WASHERS ON THE POST OPOSITE THE HOLD-DOWN." AND "HOLD-DOWNS SHALL BE TIGHTENED TO FINGER TIGHT PLUS ONE-HALF WRENCH TURN JUST PRIOR TO COVERING THE WALL FRAMING."

ROOF DIAPHRAGM NAILING TO BE INSPECTED BEFORE COVERING. FACE GRAIN OF PLYWOOD SHALL BE PERPENDICULAR TO SUPPORTS. FLOOR SHALL HAVE TONGUE AND GROOVE OR BLOCKED PANEL EDGES. PLYWOOD SPANS SHALL CONFORM WITH TALBE 2304.7.

ALL DIAPHRAGM AND SHEAR WALL NAILING SHALL UTILIZE COMMON NAILS OR GALVANIZED BOX.

ALL BOLT HOLES SHALL BE DRILLED 1/32" TO 1/16" OVERSIZED.

HOLD-DOWN HARDWARE MUST BE SECURED IN PLACE PRIOR TO FOUNDATION INSPECTION.

PROTECTION OF WOOD AND WOOD BASED PRODUCTS FROM DECAY SHALL BE PROVIDED IN THE LOCATIONS SPECIFIED PER SECTION R317.1 BY THE USE OF NATURALLY DURABLE WOOD. OR WOOD THAT IS PRESERVATIVE-TREATED IN ACCORDANCE WITH AWPA U1 FOR THE SPECIES, PRODUCT, PRESERVATIVE AND END USE. PRESERVATIVES SHALL BE LISTED IN SECTION 4 OF AWPA U1.

SOILS NOTE:
PRIOR TO REQUESTING A BUILDING DEPARTMENT FOUNDATION INSPECTION, THE SOILS ENGINEER SLASH GEOTECHNICAL CONSULTANT SHOW INSPECT AND APPROVE THE FOUNDATION EXCAVATION. (106.4.3)

HAVE THE CONSULTING SOILS LAST GEOTECHNICAL ENGINEER REVIEW AND APPROVE THE FOUNDATION PLANS AND FOUNDATION DETAILS . (106.4.3)

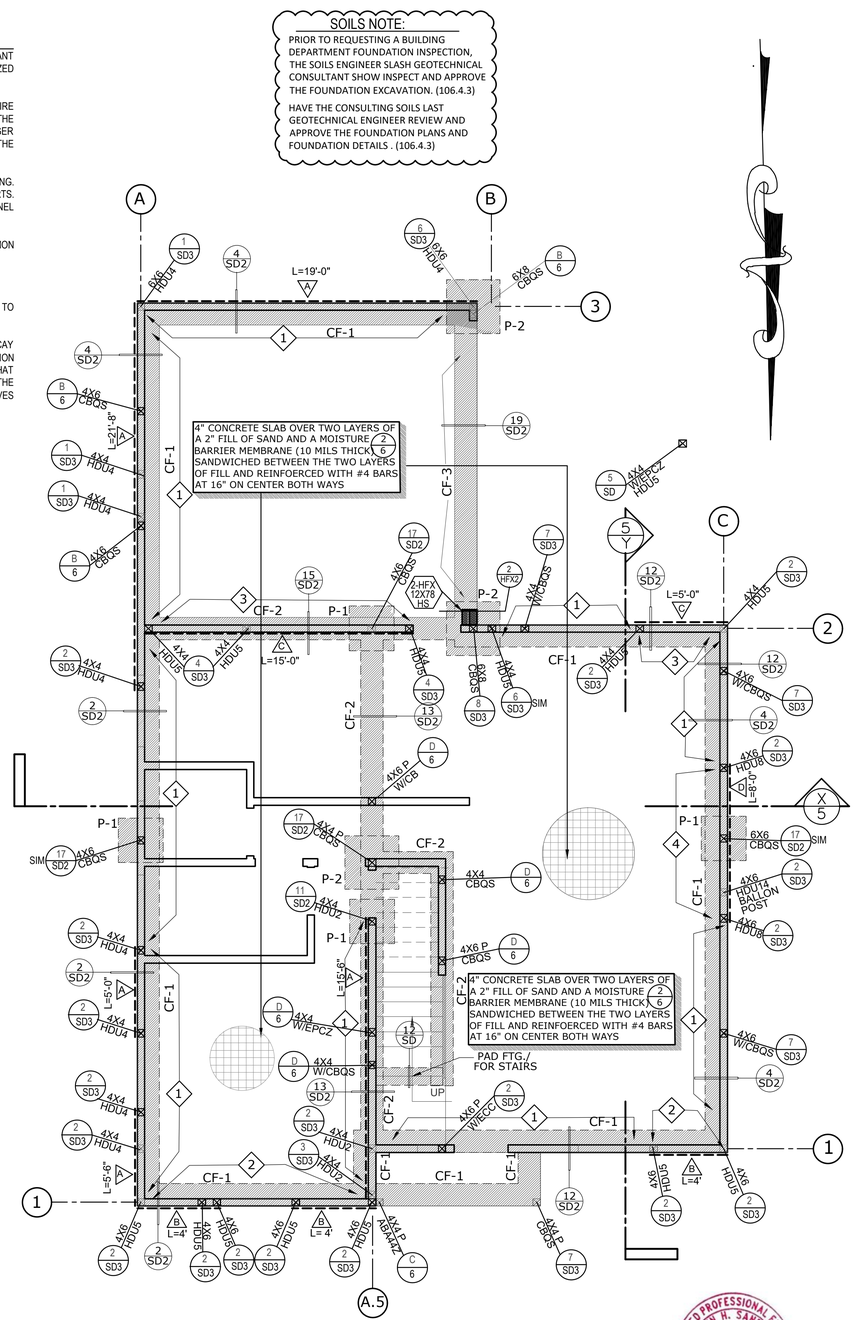

FOUNDATION PLAN
SCALE: 1/4"=1'-0"

REQUIRED SPECIAL INSPECTION

IN ADDITION TO THE REGULAR INSPECTIONS, THE FOLLOWING ITEMS WILL ALSO REQUIRE SPECIAL INSPECTION IN ACCORDANCE WITH SEC. 1701 OF THE UNIFORM BUILDING CODE.

DUCT TESTING	SPECIAL INSPECTION
EDGE DISTANCE @ FOUNDATION STAGE	DEPUTY INSPECTOR
WOOD SHEARWALL PANELS WITH NAILING SPACED 4" O/C OR LESS	SPECIAL INSPECTION
STRONG WALL PANELS	BY: ENGINEER OF RECORD



BUILDING AND SAFETY DIVISION
Department of Public Works
APPROVED
UNDER LOS ANGELES COUNTY CODE
TITLES 26, 30 AND 31
DMcCombs
PUBLIC WORKS
04/08/2026 11:18:30 AM
This set of plans and specifications must be kept at the job site at all times and it is unlawful to make any changes, modifications or alterations to these plans or specifications without the prior written permission of the Building Official. The stamping of this set of plans and specifications SHALL NOT, under any circumstances, be deemed to permit or to be an approval of any work or activity that violates any provisions of any County Ordinance or State Law.

Foundation Notes:

1. 4" CONCRETE SLAB OVER TWO LAYERSOF A 2" FILL OF SAND AND A MOISTURE BARRIER MEMBRANE (10 MILS THICK) SANDWICHED BETWEEN THE TWO LAYERS OF FILL AND REINFOERCED WITH #4 BARS AT 16" ON CENTER BOTH WAYS

2. SATURATE THE SOIL 18" DEEP WITH WATER BEFORE PLACING CONCRETE

3. SECURE ALL HOLDDOWN HARDWARE IN PLACE BEFORE FIRST FOUNDATION INSPECTION.

4. HOLD-DOWNS SHALL BE RE-TIGHTENED JUST PRIOR TO COVERING WALL FRAMING

5. PROVIDE APPROVED WASHERS AT ALL HOLDOWNS AND ANCHOR BOLTS

6. ALL ANCHOR BOLTS SHALL BE EMBED 7" INTO CONT. FOOTINGS

7. LIMIT SOIL BEARING PRESSURE TO 1000PSF EXCEPT WHERE SOILS REPORT REQUIRED

8. TYPICAL ANCHOR BOLTS - 5/8"Ø X 10"@SEE PLAN EXCEPT AT SHEAR WALLS PER SCHEDULE.

9. PROVIDE A GI WEEP SCREED NOT MORE THAN 4" ABOVE THE FINISH GRADE AT FTG

10. ALL REBARS SHALL BE 3" CLEAR OF SOIL

11. LAYOUT FOUNDATION USING ARCHITECTURAL DIMENSIONS OF FIRST FLOOR PLANS

12. ALL FOUNDATION SILL PLATES SHALL BE PRESSURE TREATED OR FOUNDATION GRADE REDWOOD

13. ALL ANCHOR BOLTS SHALL HAVE AN EDGE DISTANCE OF 1-3/4"

"ALL HOLDOWN ANCHORS SHALL BE TIED IN PLACE PRIOR TO CALLING FOUNDATION INSPECTION"

"PROVIDE SURVEY STAKES PRIOR FOUNDATION INSPECTION TO VERIFY LOT LINES."

NOTES:

IN AREAS WHERE EXPANSIVE OR COLLAPSIBLE SOILS ARE KNOWN TO EXIST. ALL DWELLING SHALL HAVE A CONTROLLED METHOD OF WATER DISPOSAL FROM ROOFS THAT WILL COLLECT AND DISCHARGE ROOF DRAINAGE TO THE GROUND SURFACE AT LEAST 5 FEET FROM FOUNDATION SALLS OR TO AN APPROVED DRAINAGE SYSTEM.

FOUNDATION SILLS SHALL BE NATURALLY DURABLE OR PRESERVATIVE-TREATED WOOD. FIELD-CUT ENDS, NOTCHES AND DRILLED HOLES OF PRESERVATIVE-TREATED WOOD SHALL BE FIELD-TREATED PER AWPA M4.

SATURATE THE SOIL 18-IN. DEEP BEFORE PLACING THE CONCRETE SLAB.

NOTES:

CONTRACTORS RESPONSIBLE FOR THE CONSTRUCTION OF A WIND OR SEISMIC FORCE RESISTING SYSTEM/COMPONENT LISTED IN THE "STATEMENT OF SPECIAL INSPECTION" SHALL SUBMIT A WRITTEN STATEMENTE OF RESPONSABILITY TO THE LA COUNTY INSPECTORS AND THE OWNER PRIOR TO THE COMMENCEMENT OF WORK ON SUCH SYSTEM OR COMPONENT PER SEC 1706.1

CONTINUOUS SPECIAL INSPECTION BY A REGISTERED DEPUTY INSPECTOR IS REQUIRED FOR CONCRETE STRENGTH f'c>2500 psi.

FOUNDATION SILLS SHALL BE NATURALLY DURABLE OR PRESERVATIVE-TREATED WOOD.

PERIODIC SPECIAL INSPECTION IS REQUIRED FOR WOOD SHEAR WALLS, SHEAR PANELS, AND DIAPHRAGMS, INCLUDING NAILING, BOLTING, ANCHORING, AND OTHER FASTENING TO COMPONENTS OF THE SEISMIC FORCE RESISTING SYSTEM. SPECIAL INSPECTION BY A DEPUTY INSPECTOR IS REQUIRED WHERE THE FASTENER SPACING OF THE SHEATHING IS 4 INCHES ON CENTER OR LESS.

CF1 = 15"WIDE X 24" DEEP FTG. W/ 2-#4 TOP & BOTT. TYP.

CF2 = 15"WIDE X 18" DEEP FTG. W/ 2-#4 TOP & BOTT. TYP.

CF3 = 15"WIDE X 24" DEEP FTG. W/ 2-#4 TOP & BOTT.W/#4 TIES @6"O/C

ANCHOR BOLTS:

1 = 5/8" DIA. X 10" A. BOLTS @ 48" O/C
2 = 5/8" DIA. X 10" A. BOLTS @ 42" O/C
3 = 5/8" DIA. X 10" A. BOLTS @ 32" O/C
4 = 5/8" DIA. X 10" A. BOLTS @ 24" O/C

A. BOLTS:

USE 5/8" DIA. X 10" A. BOLTS @ SEE SCH. O/C 12" FROM CORNERS & ENDS (7" MIN. EMBEDMENT). W/ 3"X3"X0.229" PLATE WASHERS

TYPE	AREA	DEPTH	REBAR
P1	30" SQ.	18"	3-#4 EA. WAY
P2	36" SQ.	18"	5-#4 EA. WAY

REVISIONS	BY
4/28/2021 BUILDING AND SAFETY DIVISION	C.L.
2/25/2026	C.L.
3/13/2026	C.L.

Plans drawn by:
G P. FOX DRAFTING INC.
RESIDENTIAL DRAFTING
8050 E. FLORENCE AVE, SUITE.27
DOWNEY, CA 90240
(562) 928-5467
email: gpfoxdesign@verizon.net

GENERAL NOTES

1. VERIFY MEASUREMENTS WITH CORRESPONDING COSTRUCTED OR EXISTING CONDITIONS PRIOR TO PROCEEDING WITH THE WORK, AND NOTIFY THE DRAFTSMAN IMMEDIATELY OF SIGNIFICANT DISCREPANCIES.
2. FINISH ELEVATIONS REFERENCED ON THE DRAWINGS ARE DATUM ELEVATIONS ABOVE THE FINISH FLOOR ELEVATION. THE CONTRACTOR MUST COORDINATE DATUM-BASED ELEVATIONS SHOWN WITH SITE-SPECIFIC ELEVATIONS SHOWN ON CIVIL DRAWINGS.
3. WALL DIMENSIONS SHOWN ARE TO FACE OF WALL FINISH UNLESS SPECIFICALLY NOTED OTHERWISE.

Project:
PROPOSED NEW 2-STORY S.F.D. AND AN ADU

Sheet Title:
FOUNDATION PLAN MAIN BLDG.

Project for:
SALVADOR POLINA

Project:
Address:
13828, 13828 1/2 CREWE ST WHITTIER , CA.90605

BLDR240320002527

Checked	G.P.
Job no.	----
Drawn	J.P.M.
Date	03/19/2024

SHEET: 6 OF SHEETS

FRAMING NOTES

1. ALL BEAMS SHALL HAVE A MINIMUMUM 4X4 POSTS AT EACH END.
2. PROVIDE 4X BEAM BELOW ALL SHEAR WALLS PARALLEL TO JOISTS AND CONTINUOUS 4X BLK'G WHERE WALLS ARE PERPENDICULAR.
3. PROVIDE DOUBLE JOISTS UNDER ALL PARALLEL PARTITIONS AND CONTINUOUS 2X BLOCKING UNDER PERPENDICULAR WALLS.
4. EXTEND ALL INTERIOR SHEAR WALLS TO BOTTOM OF ROOF SHEATHING.
5. VERIFY ALL DIMENSIONS BASED ON ARCHITECTURAL PLAN.
6. INSTALL ALL MANUFACTURED PRODUCTS PER INSTRUCTIONS AS APPROVED BY BUILDING DEPT
7. BEARING WALL STUDS SHALL NOT BE NOTCHED MORE THAN 25%BORED HOLES SHALL NOT BE MORE THAN 40%
8. PROVIDE SOLID BLOCKING AT ALL HORIZONTAL JOINTS IN BRACED WALL PANELS.
9. RAFTER TIES SHALL BE SPACED AT 48"OC MAX.
10. RAFTERS SHALL BE FRAMED DIRECTLY OPPOSITE EACH OTHER AT RIDGES,HIPS & VALLEYS
11. FLOOR JOISTS SHALL BE SUPPORTED LATERALLY AT ENDS AND AT EACH SUPPORT BY SOLID BLOCKING NO LESS THAN 2X MIN. THICK AND FULL DEPTH OF JOISTS SEE SHEAR TRANSFER DETAILS FOR SIZE.
12. WOOD STRUCTURAL PANEL ROOF SHEATHING EXPOSED ON THE UNDERSIDE SHALL BE BONDED WITH EXTERIOR GLUE.
13. WOOD STRUCTURAL PANEL DIAPHRAGMS AND SHEAR WALLS SHALL BE CONSTRUCTED USING EXTERIOR GLUE AND SHEETS NOT LESS THAN 4FT X 8FT EXCEPT AT EXCEPT AT BOUNDARIES AND CHANGES IN FRAMING WHERE MINIMUM SHEET DIMENSION SHALL BE 24INCHES UNLESS ALL EDGES OF UNDERSIZED SHEETS ARE SUPPORTED BY FRAMING MEMBER OR BLOCKING.
14. FIRE STOPS SHALL BE PROVIDED IN THE FOLLOWING LOCATIONS:

a) CONCEALED SPACES OF STUD WALLS & PARTITIONS INCLUDING FURRED SPACES AT CEIL'G & FLOOR LEVELS AND AT 10FT INTERVALS VERTICAL & HORIZONTAL

b) AT ALL INTERCONNECTION BETWEEN VERTICAL AND HORIZONTAL SPACES eg. SOFFITS,DROPS& COVES

c) IN CONCEALED SPACES BETWEEN STAIR STRINGERS AT TOP & BOTTOM OF RUN AND BETWEEN STUDS ALONG AND IN LINE WITH THE RUN OF STAIRS IF THE WALLS UNDER THE STAIRS ARE UNFINISHED

d) IN OPENINGS AROUND VENTS,PIPES,DUCTS CHIMNEYS AND SIMILAR OPENINGS WHICH AFFORD A PASSAGE FOR FIRE AT CEILING AND FLOOR LEVELS WITH NON-COMBUSTIBLE MATERIALS

e) AT OPENINGS BETWEEN ATTIC SPACES AND CHIMNEY CHASES FOR RACTORY BUILT CHIMNEYS FOR FIRE AT CEILING AND FLOOR LEVELS WITH NON-

MAXIMUM DEPTH OF NOTCHING AT THE ENDS OF THE MEMBER SHALL NOT EXCEED ONE-FOURTH THE DEPTH OF THE MEMBER.

NOTCHES IN THE TOP OR BOTTOM OF THE MEMEBER SHALL NOT EXCEED ONE-SIXTH OF THE DEPTH, AND SHALL NOT BE LOCATED IN THE MIDDLE THIRD OF THE SPAN.

PROVIDE DOUBLE JOIST UNDER PARALLEL BEARING PARTITIONS. A RIDGE BOARD NOT LESS IN DEPTH THAN THE CUT END OF THE RAFTER IS REQUIRED.

A RIDGE BOARD NOT LESS IN DEPTH THAN THE CUT END OF THE RAFTER IS REQUIRED.

" LAG BOLTS : PROVIDE LEAD HOLE 40%-70% OF THREADED SHANK DIA. AND FULL DIA. FOR SMOOTH SHANK PORTION " 97 NDS

ALL WOOD IN CONTACT WITH CONCRETE FOUNDATION SILLS SHALL BE PRESSURE TREATED. OR FOUNDATION GRADE REDWOOD.

FRAME ALL INTERIOR SHEAR WALLS TO ROOF.

"SOLID BLOCKING SHALL BE PROVIDED AT ALL HORIZONTAL JOINTS OCCURRING IN BRACED WALL PANELS."

"PLATE WASHERS ARE REQUIRED FOR ALL HOLD DOWNS."

"HOLD-DOWN CONNECTORS SHALL BE TIGHTENED JUST PRIOR TO COVERING THE WALL FRAMING."

"FOR CONVENTIONAL LIGHT-FRAME CONSTRUCTION THE 5 " WITH 7" EMBEDMENT, 7 MINIMUM SIZE ANCHOR BOLT IS 8 BOLT DIAMETER END DISTANCE. 6' SPACING, AND PLATE WASHERS PER TABLE 23-II-L."

"DRAFT STOPS SHALL BE PROVIDED WITHIN A CONCEALED FLOOR-CEILING ASSEMBLY FORMED OF COMBUSTIBLE CONSTRUCTION. (1000 SQ.FT. & 60' MAX. BETWEEN DRAFT STOPS) 91.708.3.1.1.1."

"DRAFT STOPS SHALL BE PROVIDED WITHIN ATTICS, MANSARDS, OVERHANGS AND SIMILAR CONCEALED SPACES FORMED OF COMBUSTIBLE CONSTRUCTION.91.708.3.1.2.2 (3000 SQ. FT. & 60 MAX.)"

"BEARING WALL STUDS CANNOT BE NOTCHED MORE THAN 25 % OF THEIR WIDTH. BORED HOLES CANNOT HAVE A DIAMETER GREATER THAN 40 % OF THE STUD WIDTH."

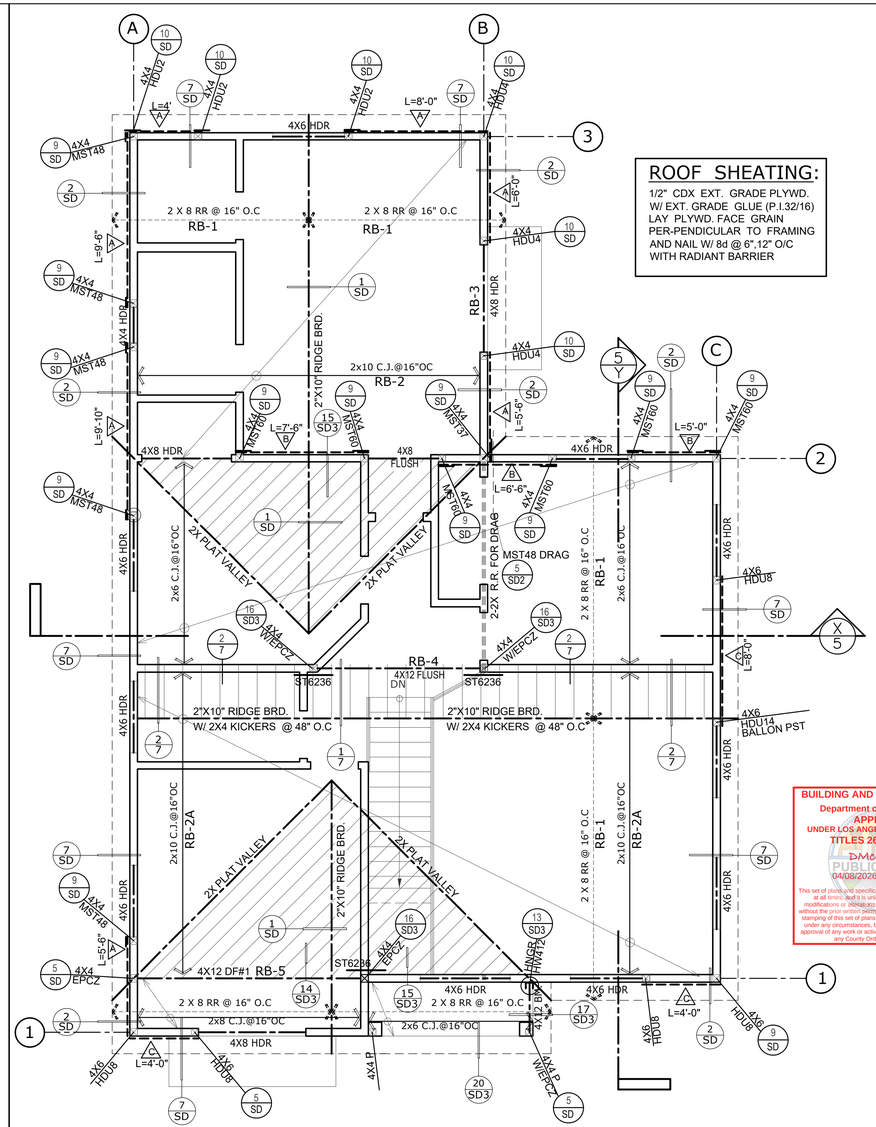

ROOF FRAMING PLAN

SCALE: 1/4"=1'-0"

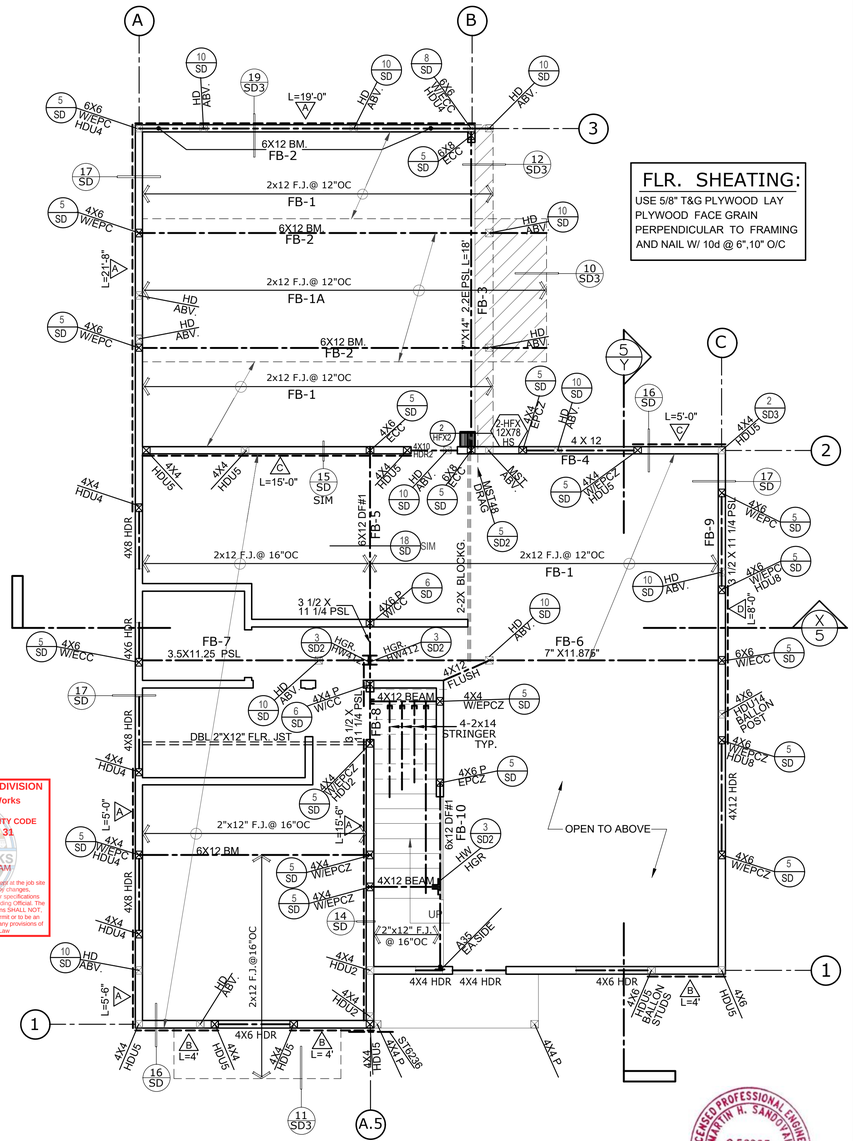

SECOND FRAMING PLAN

SCALE: 1/4"=1'-0"

STRUCTURAL DESIGN BASIS

VERTICAL DESIGN

-ROOF DEAD LOAD = 11 psf
ROOF LIVE LOAD = 20 psf
-ROOF SNOW LOAD = N/A
-FLOOR DEAD LOAD = 13 psf
-FLOOR LIVE LOAD = 40.0 psf

LATERAL DESIGN

SEISMIC:
-SITE CLASS: D
-OCCUPANCY CATEGORY:II
-Ss = 2.359 S1 = 0.819
-Sds = 1.572 Sd1 = 0.819
-SEISMIC FORCE RESISTING SYSTEM(S):
-Cs = Sds / (R/1) = 0.242 / 1.4 (ASD)
-V = Cs * W (ASD) = 0.173 * 179,000#
IMPORTANCE FACTOR, 1: 1.0
SEISMIC DESIGN CATEGORY : D
LATITUDE: 34.02957
LONGITUDE: -118.18019
PLYWD. SHEAR WALLS
R = 6.5
P = 1.3

WIND:
-BASIC WIND SPEED = 110 MPH IMPORTANCE FACTOR = 1.0
-OCCUPANCY CATEGORY: II WIND EXPOSURE CAT. = C
-HEIGHT & EXPOSURE ADJ. COEFF: 1 .0
-TOPOGRAPHIC ADJ. FACTOR: 1.0
-SIMPLIFIED DESIGN WIND PRESSURE: 22.2 PSF (Ps30)
-DESIGN WIND PRESSURE = 22.20 PSF

FOUNDATION DESIGN

-SOIL - TYPE 5 (SITE CLASS D USED FOR LATERAL DESING)
-ALLOWABLE SOIL BEARING PRESSURE - 1,500 PSF
-RETAINING WALLS:
RESTRAINED LOAD (EFP) = NA PCF
CANTILEVERED LOAD (EFP) = NA PCF (LEVEL)
PASSIVE SOIL PRESSURE = NA PCF / 2,000 PCF MAX.
COEFFICIENT OF FRICTION = NA

2023 LOS ANGELES COUNTY CODE SHEARWALL SCHEDULE

02-24-23

SHEAR-WALL No.	STRUCTURAL I APA-RATED WOOD STRUCTURAL PANEL THICKNESS	COMMON NAIL SPACING @ BOUNDARIES & EDGES (B.N. & E.N.) FIELD NAILING @ 12" O.C.	ALLOWABLE SHEAR / FT (WOOD STUDS @16" O.C., U.N.0) (LIMITED TO 75%)	2"X CLG. JSTS. @ 16" O/C			
				5/8" Ø A.B. SPACING 2x SILL V= 1184# 3x SILL V= 1520# O.C. [2]	FRAMING CLIP SPACING V = 450# O.C.	16d COMMON NAIL SPACING @ MAX. 2x SOLE PLATE ONLY V= 121# O.C. [3]	1/4" LAG x 6" LONG 3x SOLE PLATE ONLY: V= 537# O.C.
S	7/8" STUCCO	No. 11 GA. @ 6" O.C.	90 #/FT.	48"	A35 @ 30"	8"	36"
A	15/32"	8d @ 6" o.c.	280#/FT.	48"	A35 @ 18"	5"	23"
B [1, 5]	15/32"	8d @ 4" o.c.	430#/FT.	42"	A35 @ 12"	3"	15"
C [1, 5]	15/32"	8d @ 3" o.c.	550#/FT.	32"	A35 @ 12"	3"	24"
D [1, 5]	15/32"	8d @ 2" o.c.	730#/FT.	24"	A35 @ 7"	→	9"
E [1, 5]	15/32"	10d @ 2" o.c.	850#/FT.	20"	A35 @ 6"	→	6"

1. FRAMING AT FOUNDATION SILL PLATES AND ADJOINING PANEL EDGE STUDS SHALL BE A SINGLE 3x NOMINAL MEMBER, AND ALL NAILS SHALL BE STAGGERED WITH 1/2" EDGE DISTANCE.
2. SIMPSON BP5/8-3 BEARING PLATES (LARR 25292), OR OTHER LISTED MAKE, APPROVED BY BUILDING OFFICIAL, SHALL BE USED WITH ALL 5/8" DIA. ANCHORS. 5/8" DIA. SIMPSON TITAN HD ANCHORS (ICC-ES-ESER-1056/LARR# 25560) WITH 4\" MIN. EMBEDMENT, MAY BE USED IN LIEU OF 5/8" DIA. ANCHOR BOLTS AT EXISTING FOOTINGS WITH SAME SPACING PER TABLE ABOVE. SPECIAL INSPECTION REQUIRED FOR ALL EPOXY ANCHOR INSTALLATIONS.
3. ALL SILL NAILING SHALL BE STAGGERED 1/2" MINIMUM. (TYPICAL)
4. WHEN A SHEARWALL IS SPECIFIED ON BOTH SIDES OF WALL, ALL SLIDING ANCHOR CONNECTORS SHALL BE ATTACHED WITH SPACINGS FROM THE TABLE ABOVE TO BE REDUCED BY HALF.
5. SPECIAL INSPECTION REQUIRED

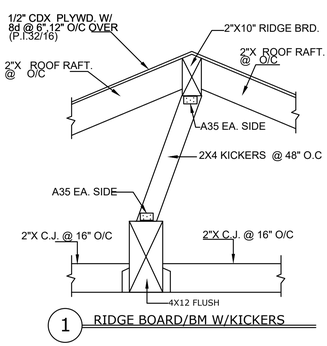

1 RIDGE BOARD/BM W/KICKERS

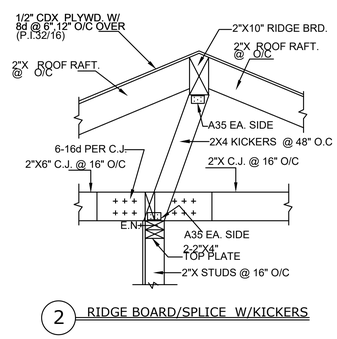

2 RIDGE BOARD/SPLICE W/KICKERS

REVISIONS	BY
2/25/2026	C.L.
3/13/2026	C.L.

Plans drawn by:

G P. FOX DRAFTING INC.

RESIDENTIAL DRAFTING
8050 E. FLORENCE AVE, SUITE.27
DOWNEY, CA 90240
(562) 928-5467
email: gpfoxdesign@verizon.net

GENERAL NOTES

1. VERIFY MEASUREMENTS WITH CORRESPONDING COSTRUCTED OR EXISTING CONDITIONS PRIOR TO PROCEEDING WITH THE WORK, AND NOTIFY THE DRAFTSMAN IMMEDIATELY OF SIGNIFICANT DISCREPANCIES.
2. FINISH ELEVATIONS REFERENCED ON THE DRAWINGS ARE DATUM ELEVATIONS ABOVE THE FINISH FLOOR ELEVATION. THE CONTRACTOR MUST COORDINATE DATUM-BASED ELEVATIONS SHOWN WITH SITE-SPECIFIC ELEVATIONS SHOWN ON CIVIL DRAWINGS.
3. WALL DIMENSIONS SHOWN ARE TO FACE OF WALL FINISH UNLESS SPECIFICALLY NOTED OTHERWISE.

Project:

PROPOSED NEW 2-STORY S.F.D. AND AN ADU

Sheet Title:

ROOF FRAMING PLAN & SECOND FLOOR FRAMING PLAN MAIN BLDG.

Project for:

SALVADOR POLINA

Project: Address:

13828, 13828 1/2 CREWE ST WHITTIER , CA.90605

BLDR240320002527

LICENSED PROFESSIONAL ENGINEER MARTIN W. SANDOVAL C 56905 EXP. 06/30/27 CIVIL STATE OF CALIFORNIA

Checked	G.P.
Job no.	----
Drawn	J.P.M.
Date	03/19/2024

7

OF SHEETS

NOTES:

BATHROOMS, WATER CLOSET COMPARTMENTS AND OTHER SIMILAR ROOMS SHALL BE PROVIDED NATURAL VENTILATION OR WITH MECHANICAL VENTILATION CAPABLE OF 50 cfm EXHAUSTED DIRECTLY TO THE OUTSIDE. (R303.3)

HEATER SHALL BE CAPABLE OF MAINTAINING A MINIMUM ROOM TEMPERATURE OF 68 F AT A POINT 3 FEET ABOVE THE FLOOR AND 2 FEET FROM EXTERIOR WALLS IN ALL HABITABLE ROOMS AT THE DESIGN TEMPERATURE. (R303.8)

EVERY DWELLING UNIT SHALL BE PROVIDED WITH A WATER CLOSET, LAVATORY, BATHTUB OR SHOWER, AND KITCHEN.

RECESSED LUMINAIR NOTE:

FOR RECESSED LUMINARIES, SPECIFY FIXTURES TO BE LISTED FOR ZERO CLEARANCE INSULATION CONTACT (IC) BY UL OR OTHER NATIONALLY RECOGNIZED TESTING/RATING LABORATORY. CEC 150(K)(8)

HIGH EFFICACY NOTE:

ALL LIGHTING TO BE HIGH EFFICACY. CENERGYC 150.0(K)(2)J)

Electrical Legend

	ELECTRICAL RECEPTACLE
G.F.I.	GROUND FAULT RECEPTACLE
$	SWITCHES
$D	SWITCHES WITH DIMMER
$VS	SWITCHES WITH VACANCY SENSOR
	FLUORESCENT FIXTURE HIGH EFFICACY
	LIGHTING FIXTURES HIGH EFFICACY
	EXHAUST FAN W/ 50 CFM MIN. TO OUTSIDE MUST BE "ENERGY STAR" W/ HUMIDISTAT READILY ACCESSIBLE
	HARDWIRED SMOKE DETECTOR
CMA	HARD-WIRED CARBON MONOXIDE ALARM INTERCONNECTED WITH BATTERY BACKUP
P	LIGHTING W/ MOTION SENSOR ON AND PHOTO-CONTROLLED SENSOR OFF
	FAN WITH LIGHTING

INTERIOR FINISH SCHEDULE

ROOM	CEILING & WALLS	FLOORS
LIVING	1/2" GYPSUM BOARD	CARPET
DINING	1/2" GYPSUM BOARD	CARPET
BEDROOM	1/2" GYPSUM BOARD	CARPET
KITCHEN	1/2" GYPSUM BOARD	V.A. TILE
BATH	1/2" GYPSUM BOARD	V.A. TILE

WALL LEGEND

- 2X4 OR 2X6 STUD WALLS
- 1-HOUR FIRE RATED PARTITION
- TYP.WINDOW
- 2X REINFORCED WALLS SEE GRAB-BARS REINFORCEMENT DETAIL A/1-3

FLOOR AREAS A.D.U.:

First Floor = 487.4 s.f.
Second Floor= 683.9 s.f.
Total Floor Area: 1,171 s.f.

1-Car Garage: 227.5 s.f.

F.A.U. LOCATION NOTE:

ATTIC ACCESS NOT OVER 20' FROM EQUIPMENT [707 CMC], UNOBSTRUCTED PASSAGE 24" WIDE WITH SOLID CONTINUOUS FLOORING FROM ACCESS TO EQUIPMENT/CONTROL PANEL [708 CMC 2007]. A LEVEL, UNOBSTRUCTED WORK PLATFORM MINIMUM 30" IN FRONT OF EQUIPMENT WITH 30" HEADROOM [708 CMC 2007]. LIGHT OVER EQUIPMENT WITH SWITCH AT ACCESS. AIR SUPPLY OPENINGS OF 2 SQUARE INCH PER 1,000 BTU FOR BLOWER TYPES AND 7 SQUARE INCH PER 1,000 BTU FOR GRAVITY FEED TYPE. PAD SUPPORTING COMPRESSOR/CONDENSER SHALL BE A MINIMUM OF 3" ABOVE GRADE.

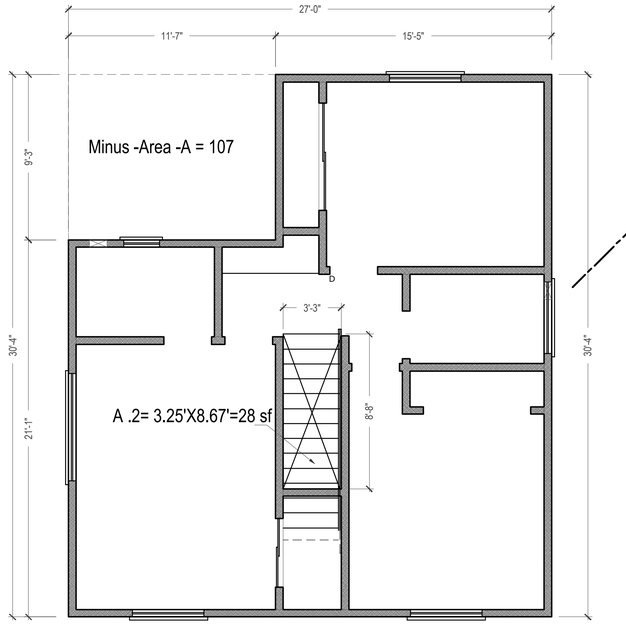

TOTAL BOX AREA: 27'X30.33'= 818.9 sf
Minus -Area -A = -107
Minus -Area -A.2 = -28
TOTAL NET AREA: = 683.9 sf

SECOND FLOOR PLAN

SCALE: 1/4"=1'-0"

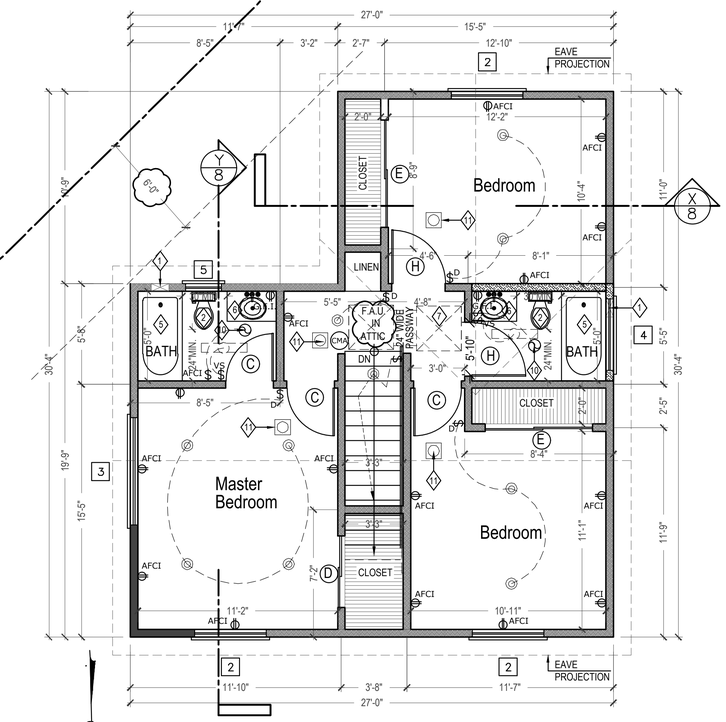

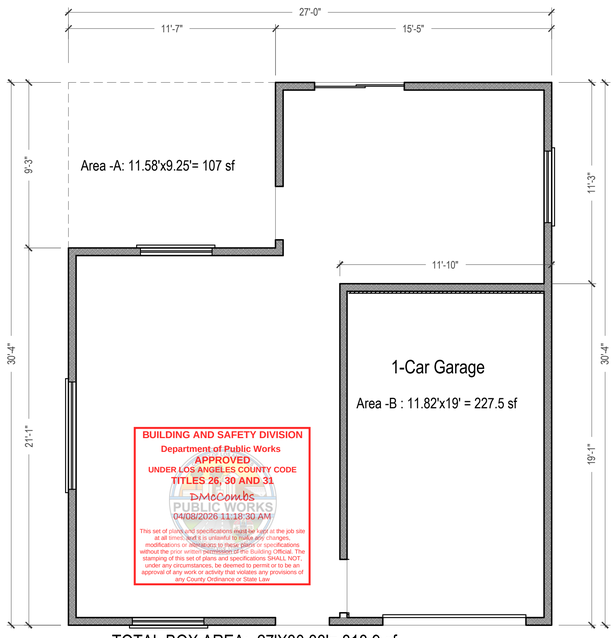

BUILDING AND SAFETY DIVISION
Department of Public Works
APPROVED
UNDER LOS ANGELES COUNTY CODE
TITLES 26, 30 AND 31
DMcombs
PUBLIC WORKS
04/08/2026 11:18:30 AM
This set of plans and specifications must be kept at the job site at all times and it is unlawful to make any changes, modifications or alterations to these plans or specifications without the approval of the Department of Public Works. The stamping of this set of plans and specifications SHALL NOT, under any circumstances, be deemed to permit or to be an approval of any work or activity that violates any provisions of any County Ordinance or State Law

TOTAL BOX AREA: 27'X30.33'= 818.9 sf
Minus -Area -A = -107
Minus -Area -B = -224.5
TOTAL NET AREA: = 487.4 sf

FIRST FLOOR PLAN

SCALE: 1/4"=1'-0"

GARAGE DOOR TO DWELLING NOTE

DOORS TO THE DWELLING UNIT SHOW ME SOLID WOOD OR SOLID OR HONEYCOMB CORE STEEL AND NOT LESS THAN ONE IN 3/8 OF AN INCH THICK , OR 20 MINUTE RATED, UNLESS THE DWELLING UNIT AND THE GARAGE ARE PROTECTED BY AN AUTOMATIC FIRE SPRINKLER SYSTEM. DOORS SHALL BE SELF CLOSING AND SELF LATCHING. (R302.5.1)

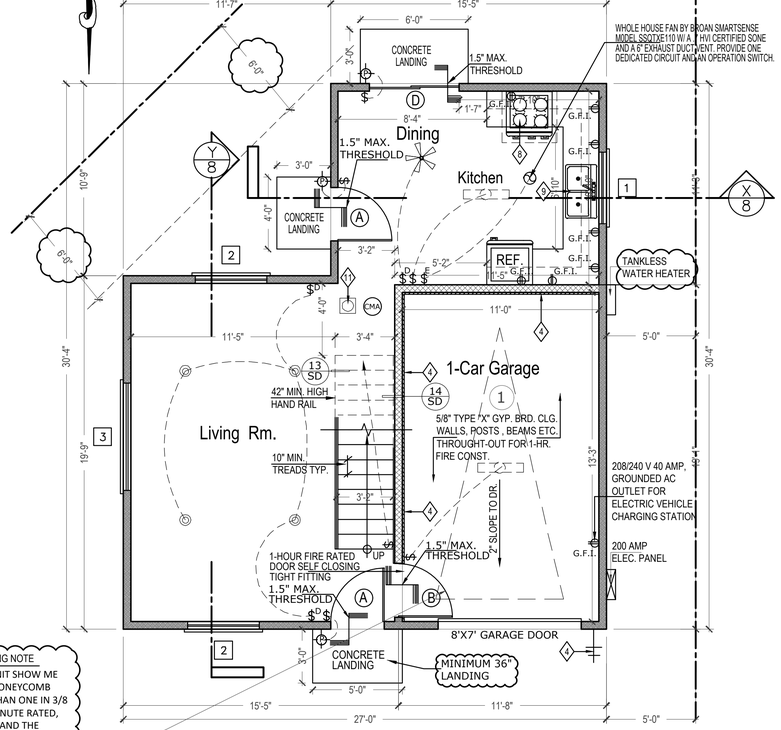

FIRST FLOOR PLAN

SCALE: 1/4"=1'-0"

Floor Plan Key Notes:

1. PROVIDE A 12" SQ. (MINIMUM) ACCESS PANEL TO BATHTUB TRAP CONNECTION EXCEPT WHERE CONCEALED FIXTURE CONNECTIONS ARE MADE WITHOUT SLIP JOINTS. DOOR TO BE TIGHTFITTING AND GASKETED.
2. PROVIDE A WATER SAVING LOW FLUSH WATER CLOSET. IN NEW BUILDING PROVIDE WATER CLOSET THAT USE A MAXIMUM OF 1.6 GALLONS PER FLUSH.
3. HOSE BIBB WITH BACKFLOW PREVENTER
4. 5/8" TYPE "X" GYP. BRD. CLG., WALLS, POSTS , BEAMS ETC. THROUGHT-OUT FOR 1-HR. FIRE CONSTRUCTION
5. SHOWER WITH SHATTER PROOF ENCLOSURE 72" HIGH W.P. GREEN BRD. 3-WALLS
6. 30" HIGH TILE COUNTERTOP WITH LAVATORY.
7. 30" X 30" ATTIC/HVAC ACCESS TO BE A TIGHTFITTING, SELF CLOSING & GASKETED DOOR.
8. 30" STOVE W/ HOOD OVER W/ 30" MIN. CLR. ABOVE STOVE
9. 32" X 21" S. STL SINK W/ GARBAGE DISPOSAL ON A SEPARATE CIRCUIT.
10. EXHAUST FAN W/ 50 CFM MIN. TO OUTSIDE MUST BE "ENERGY STAR" W/ HUMIDISTAT READILY ACCESSIBLE
11. SMOKE ALARM SHALL BE INTERCONNECTED HARD-WIRED WITH BATTERY BACKUP AND SHALL BE INSTALLED IN ACCORDANCE WITH NFPA 72.

Floor Plan Notes:

AN APPROVED SEISMIC GAS SHUT OFF VALVE WILL BE INSTALLED ON THE FUEL GAS LINE ON THE DOWN STREAM SIDE OF THE UTILITY METER AND BE REGIDLY CONNECTED TO THE EXTERIOR OF THE BUILDING OR STRUCTURE CONTAINING THE FUEL GAS PIPING. (PER ORDINANCE 170, 158) SEPARATE PLUMBING PERMIT IS REQUIRED).

PLUMBING FIXTURES ARE REQUIRED TO BE CONNCECTED TO A SANITARY SEWER OR TO AN APPROVED SEWAGE DISPOSAL SYSTEM (R306.3).

KITCHEN, SINKS, LAVATORIES, BATHTUBS, SHOWERS, BIDETS, LAUNDRY TUBS AND WASHING MACHINE OUTLETS SHALL BE PROVIDED WITH HOT AND COLD WATER AND CONNECTED TO AN APPROVED WATER SUPPLY (R306.4).

BATHTUB AND SHOWER FLOORS, WALLS ABOVE BATHTUBS WITH A SHOWERHEAD, AND SHOWER COMPARTMENTS SHALL BE FINISHED WITH A NONABSORBENT SURFACE. SUCH WALL SURFACES SHALL EXTEND TO A HEIGHT OF NOT LESS THAN 6 FEET ABOVE THE FLOOR (R307.2).

PROVIDE ULTRA LOW FLUSH WATER CLOSETS FOR ALL NEW CONSTRUCTION. EXISTING SHOWER HEADS AND TOILETS MUST BE ADAPTED FOR LOW WATER CONSUMPTION.

AUTOMATIC GARAGE DOOR OPENERS, IF PROVIDED, SHALL BE LISTED IN ACCORDANCE WITH UL 325.

SMOKE DETECTORS SHALL BE PROVIDED FOR ALL DWELLING UNITS INTENDED FOR HUMAN OCCUPANCY, UPON THE OWNER'S APPLICATION FOR A PERMIT FOR ALTERATIONS, REPAIRS, OR ADDITIONS, EXCEEDING ONE THOUSAND DOLLARS ($1,000). (R314.6.2).

WHERE A PERMIT IS REQUIRED FOR ALTERATIONS, REPAIRS OR ADDITIONS EXCEEDING ONE THOUSAND DOLLARS ($1,000), EXISTING DWELLINGS OR SLEEPING UNITS THAT HAVE ATTACHED GARAGES OR FUEL-BURNING APPLIANCES SHALL BE PROVIDED WITH A CARBON MONOXIDE ALARM IN ACCORDANCE WITH SECTION R315.1. CARBON MONOXIDE ALARMS SHALL ONLY BE REQUIRED IN THE SPECIFIC DWELLING UNIT OR SLEEPING UNIT FOR WHICH THE PERMIT WAS OBTAINED. (R315.2)

EVERY SPACE INTENDED FOR HUMAN OCCUPANCY SHALL BE PROVIDED WITH NATURAL LIGHT BY MEANS OF EXTERIOR GLAZED OPENINGS IN ACCORDANCE WITH SECTION R303.1 OR SHALL BE PROVIDED WITH ARTIFICIAL LIGHT THAT IS ADEQUATE TO PROVIDE AN AVERAGE ILLUMINATION OF 6 FOOT-CANDLES OVER THE AREA OF THE ROOM AT A HEIGHT OF 30 INCHES ABOVE THE FLOOR LEVEL. (R303.1)

DOOR OPENING NOTE:

DOOR MAY OPEN ON AN EXTERIOR LANDING, PROVIDED THE DOOR DOES NOT SWING OVER THE EXTERIOR LANDING AND THE LANDING IS NOT MORE THAN 7.75-IN. BELOW THE TOP OF THRESHOLD. (R311.3.1 EX, R311.3.2)

Door Schedule:

SYM.	SIZE	REMARKS
A	3'-0" X 6'-8" X 1 3/4"	SOLID CORE
B	3'-0" X 6'-8" X 1 3/4"	1-HOUR FIRE RATED DOOR SELF CLOSING TIGHT FITTING ,SELF LATCHING
C	2'-8" X 6'-8" X 1 3/8"	HOLLOW CORE
D	4'-0" X 6'-8"	SLIDING WOOD DOORS (DBL. DRS.)
E	6'-0" X 6'-8"	SLIDING WOOD DOORS (DBL. DRS.)
F	5'-0" X 6'-8"	SLID. GLASS DBL. DRS., TEMP. GLS.
G	8'-0" X 7'-0"	8'-0" x 7'-0" O/H SECTIONAL GARAGE DOOR WITH AUTOMATIC DOOR OPENER
H	3'-0" X 6'-8" X 1 3/4"	HOLLOW CORE

Window Schedule:

SYM.	SIZE	REMARKS
1	4'-0" X 3'-0"	VINYL SLID. WINDOW
2	4'-0" X 4'-0"	VINYL SLID. WINDOW
3	6'-0" X 4'-0"	VINYL SLID. WINDOW
4	4'-0" X 1'-6"	VINYL SLID. WINDOW OBSC. GLASS
5	2'-0" X 2'-0"	VINYL SLID. WINDOW OBSC. GLASS

REVISIONS	BY
2/25/2026	C.L.

Plans drawn by:

G P. FOX DRAFTING INC.

RESIDENTIAL DRAFTING
8050 E. FLORENCE AVE, SUITE.27
DOWNEY, CA 90240
(562) 928-5467
email: gpfoxdesign@verizon.net

GENERAL NOTES

1. VERIFY MEASUREMENTS WITH CORRESPONDING CONSTRUCTED OR EXISTING CONDITIONS PRIOR TO PROCEEDING WITH THE WORK, AND NOTIFY THE DRAFTSMAN IMMEDIATELY OF SIGNIFICANT DISCREPANCIES.
2. FINISH ELEVATIONS REFERENCED ON THE DRAWINGS ARE DATUM ELEVATIONS ABOVE THE FINISH FLOOR ELEVATION. THE CONTRACTOR MUST COORDINATE DATUM-BASED ELEVATIONS SHOWN WITH SITE-SPECIFIC ELEVATIONS SHOWN ON CIVIL DRAWINGS.
3. WALL DIMENSIONS SHOWN ARE TO FACE OF WALL FINISH UNLESS SPECIFICALLY NOTED OTHERWISE.

Project:

PROPOSED NEW 2-STORY S.F.D. AND AN ADU

Sheet Title:

FLOOR PLANS ADU

Project for:

SALVADOR POLINA

Project: Address:

13828, 13828 1/2 CREWE ST WHITTIER , CA.90605

BLDR240320002531

Checked	G.P.
Job no.	----
Drawn	J.P.M.
Date	03/19/2024

SHEET: **8** OF SHEETS

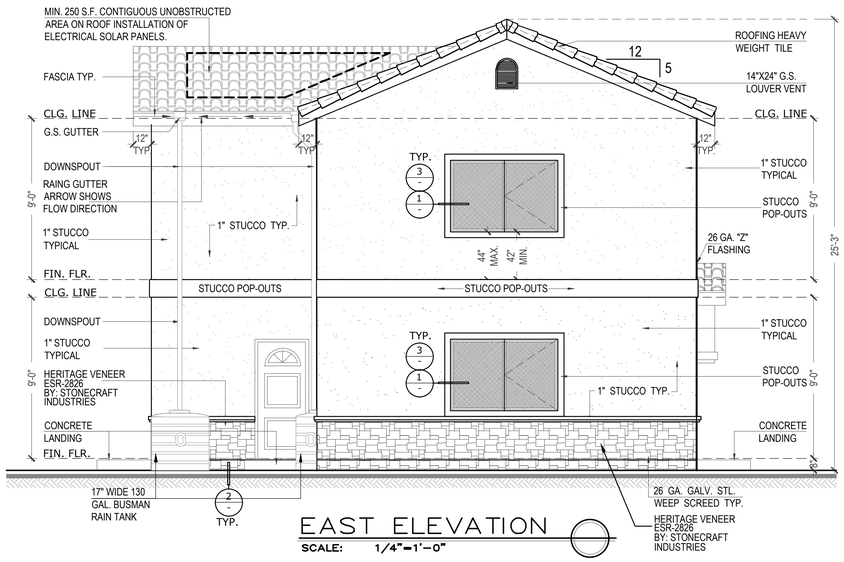

EAST ELEVATION

SCALE: 1/4"=1'-0"

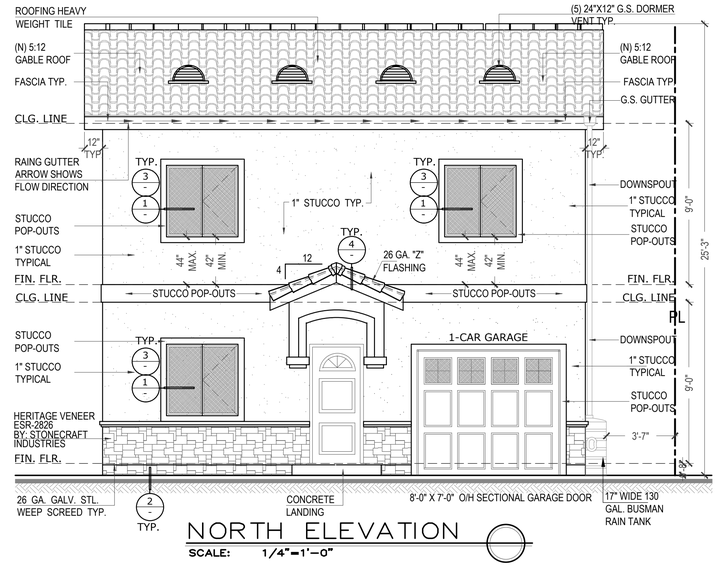

NORTH ELEVATION

SCALE: 1/4"=1'-0"

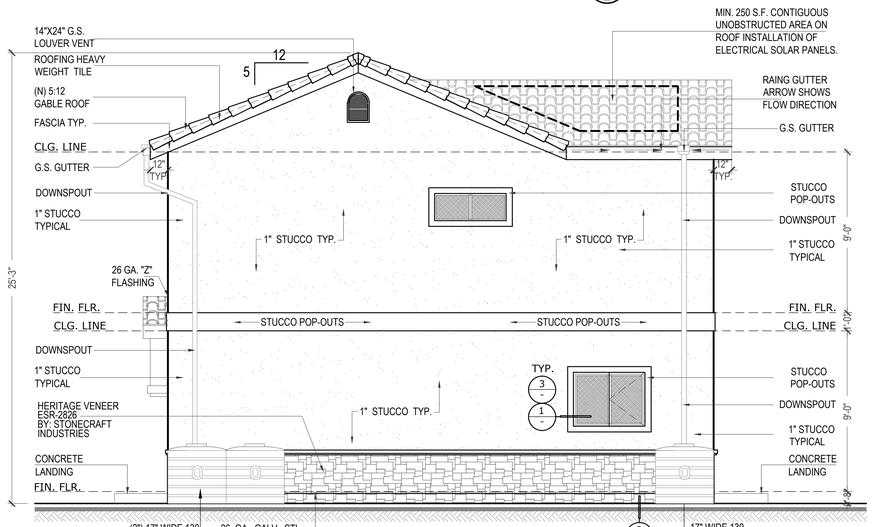

WEST ELEVATION

SCALE: 1/4"=1'-0"

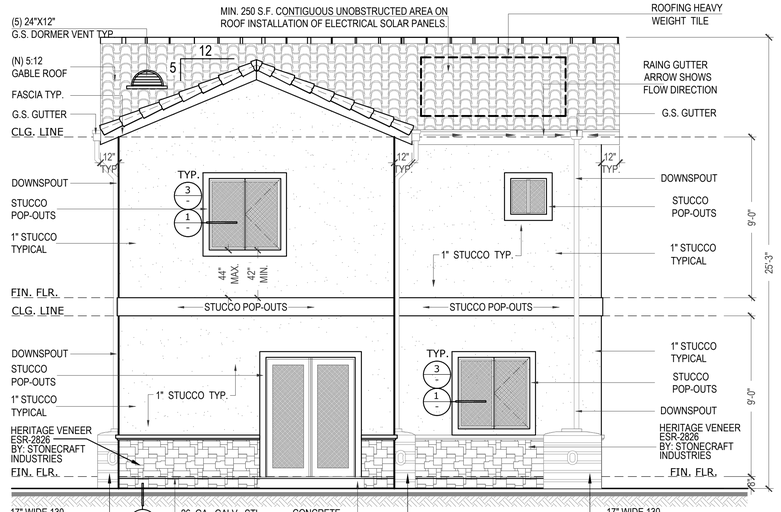

SOUTH ELEVATION

SCALE: 1/4"=1'-0"

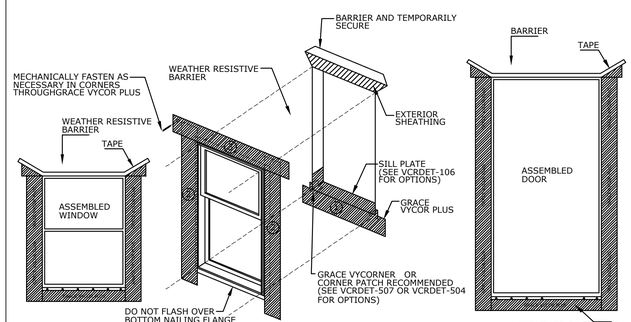

WINDOWS DETAIL

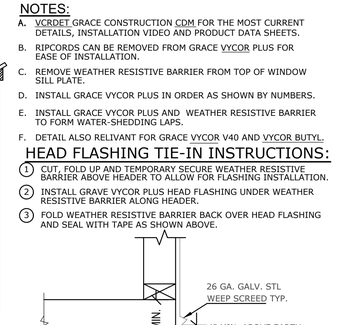

DOORS DETAIL

TYPICAL WINDOWS & DOORS FLASHING DETAIL - 1

NOTES:

A. VCRDET GRACE CONSTRUCTION CDM FOR THE MOST CURRENT DETAILS, INSTALLATION VIDEO AND PRODUCT DATA SHEETS.

B. RIPCORDS CAN BE REMOVED FROM GRACE VYCOR PLUS FOR EASE OF INSTALLATION.

C. REMOVE WEATHER RESISTIVE BARRIER FROM TOP OF WINDOW SILL PLATE.

D. INSTALL GRACE VYCOR PLUS IN ORDER AS SHOWN BY NUMBERS.

E. INSTALL GRACE VYCOR PLUS AND WEATHER RESISTIVE BARRIER TO FORM WATER-SHEDDING LAPS.

F. DETAIL ALSO RELIVANT FOR GRACE VYCOR V40 AND VYCOR BUTYL.

HEAD FLASHING TIE-IN INSTRUCTIONS:

1. CUT, FOLD UP AND TEMPORARY SECURE WEATHER RESISTIVE BARRIER ABOVE HEADER TO ALLOW FOR FLASHING INSTALLATION.
2. INSTALL GRAVE VYCOR PLUS HEAD FLASHING UNDER WEATHER RESISTIVE BARRIER ALONG HEADER.
3. FOLD WEATHER RESISTIVE BARRIER BACK OVER HEAD FLASHING AND SEAL WITH TAPE AS SHOWN ABOVE.

DETAIL - 2

ATTIC SPACE VENTILATION:

LIVING ATTIC AREA = 716 S.F.
716 / 150 = 4.78 S.F. REQUIRED
(5) 24"X12" DORMER VENTS= 3.40 S.F.
(2) 14"X24" LOUVER VENTS = 1.64 S.F.

TOTAL = 5.04 S.F. PROVIDED

OPENINGS SHALL HAVE CORRISION-RESISTANT WIRE MESH OR OTHER APPROVED MATERIAL WITH 1/16-IN. MINIMUM AND 1/4-IN MAXIMUM OPENING.

DORMER VENTS BY: "C & J METAL PRODUCTS INC." DM24 = 99 SQ. IN. EA. = 0.68 SQ. FT. EA.

LOUVER VENTS BY: "C & J METAL PRODUCTS INC." LV1424 = 119 SQ. IN. EA. = 0.82 SQ. FT. EA.

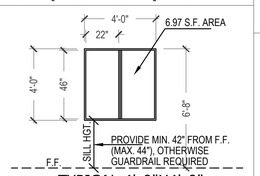

TYPICAL 4'-0"X4'-0" EMERGENCY WINDOW DETAIL-3

NOTE:
*4040 SL BEDROOM ESCAPE WINDOWS SHALL BE 20" MINIMUM CLEAR WIDTH & 24" MINIMUM CLEAR HEIGHT".

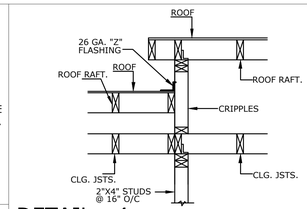

DETAIL - 4

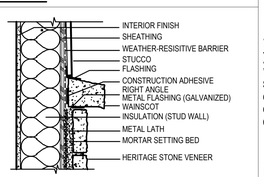

VENEER DETAIL - 5

HERITAGE VENEER ESR-2826 BY: STONECRAFT INDUSTRIES

ROOFING:

HEAVY WEIGHT TILE BY: EAGLE ROOFING ICC ESR -1900

INSTALLATION SHALL BE INACCORDANCE WITH MANUFACTURER'S SPECIFICATIONS

"2-LAYERS OF GRADE "D" PAPER SHALL BE APPLIED OVER ALL WOOD BASE SHEATING."

WEEP SCREED

A MINIMUM 26 GA. CORROSION-RESISTANT OR PLASTIC WEEP SCREED WITH A MINIMUM VERTICAL FLANGE OF 3-1/2" SHALL BE PROVIDED AT OR BELOW FOUNDATION PLATE LINE ON EXTERIOR STUD WALLS. SCREED SHALL BE A MINIMUM OF 4" ABOVE EARTH OR 2" ABOVE PAVED AREAS. (R307.2 CRC)

NOTE:

PROVIDE TWO LAYERS OF GRADE "D" PAPER AS THE WEATHER-RESISTIVE BARRIER FOR PORTLAND CEMENT PLASTER (STUCCO) WHEN APPLIED OVER WOOD SHEATING (SUCH AS PLYWOOD).

NOTES:

"INSPECTION OF NAILING REQUIRED FOR DRYWALL AND ALL LATH WHEN IN PLACE. CORNER BEADS ARE TO BE NAILED. DRYWALL BOARD SPACING SHALL BE 3/8 INCH MAXIMUM."TWO LAYERS OF GRADE D PAPER SHALL BE APPLIED OVER ALL WOOD WOOD BASE SHEATHING.

NOTES:

BUILDINGS SHALL HAVE APPROVED ADDRES NUMBERS, BUILDING NUMBERS OR APPROVED BUILDING IDENTIFICATION PLACED IN A POSITION THAT IS PLAINLY LEGIBLE AND VISIBLE FROM THE STREET OR ROAD FRONTING THE PROPERTY. (R319.1)

NOTES:

PORCHES MUST HAVE A MINIMUM CLEAR HEIGHT OF 7'-0" FOR REQUIRED LIGHT AND VENTILATION. LATH, PLASTER AND DRYWALL TO CONFORM TO THE REQUIREMENTS OF CBC CHAPTER 25.

NOTES:

PROVIDE 44" MAX. SILL HGT. ABOVE FINISH FLOOR FOR EMERGENCY EXIT ON ALL BEDROOM WINDOWS.

NOTES:

PROVIDE ANTI-GRAFFITI FINISH WITHIN THE FIRST 9 FEET, MEASURED FROM GRADE, AT EXTERIOR WALLS AND DOORS. EXCEPTION: MAINTENANCE OF BUILDING AFFIDAVIT IS RECORDED BY THE OWNER TO COVENANT AND AGREE WITH THE CITY OF LOS ANGELES TO REMOVE ANY GRAFFITI WITHIN 7-DAYS OF THE GRAFFITI BEING APPLIED. (6306)

BUILDING AND SAFETY DIVISION
Department of Public Works
APPROVED
UNDER LOS ANGELES COUNTY CODE
TITLES 26, 30 AND 31
DMcCombs
PUBLIC WORKS
04/08/2026 11:18:30 AM
This set of plans and specifications shall be kept at the job site at all times, and it is unlawful to make any changes, modifications or alterations to these plans or specifications without the prior written permission of the Building Official. The stamping of this set of plans and specifications SHALL NOT, under any circumstances, be deemed to permit or to be an approval of any work or activity that violates any provisions of any County Ordinance or State Law.

REVISIONS	BY
2/25/2026	C.L.

Plans drawn by:

G P. FOX DRAFTING INC.
RESIDENTIAL DRAFTING
8050 E. FLORENCE AVE, SUITE.27
DOWNEY, CA 90240
(562) 928-5467
email: gpfoxdesign@verizon.net

GENERAL NOTES

1. VERIFY MEASUREMENTS WITH CORRESPONDING CONSTRUCTED OR EXISTING CONDITIONS PRIOR TO PROCEEDING WITH THE WORK, AND NOTIFY THE DRAFTSMAN IMMEDIATELY OF SIGNIFICANT DISCREPANCIES.
2. FINISH ELEVATIONS REFERENCED ON THE DRAWINGS ARE DATUM ELEVATIONS ABOVE THE FINISH FLOOR ELEVATION. THE CONTRACTOR MUST COORDINATE DATUM-BASED ELEVATIONS SHOWN WITH SITE-SPECIFIC ELEVATIONS SHOWN ON CIVIL DRAWINGS.
3. WALL DIMENSIONS SHOWN ARE TO FACE OF WALL FINISH UNLESS SPECIFICALLY NOTED OTHERWISE.

Project:

PROPOSED NEW 2-STORY S.F.D. AND AN ADU

Sheet Title:

ELEVATIONS A.D.U.

Project for:

SALVADOR POLINA

Project:
Address:

13828, 13828 1/2 CREWE ST WHITTIER , CA.90605

BLDR240320002531

Checked	G.P.
Job no.	----
Drawn	J.P.M
Date	03/19/2024

SHEET: **9**

OF SHEETS

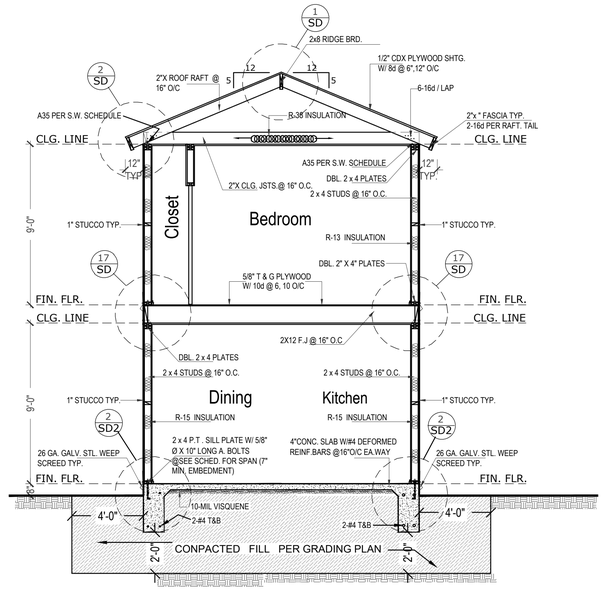

CROSS SECTION X–X

SCALE: 1/4"=1'–0"

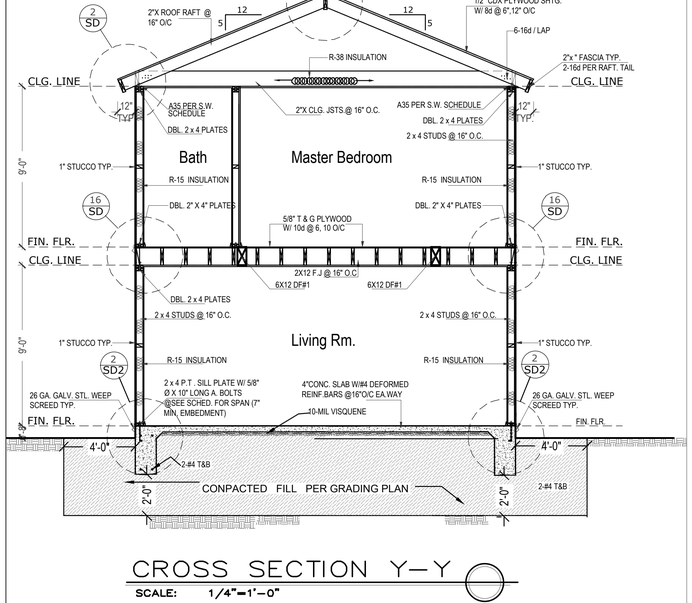

CROSS SECTION Y–Y

SCALE: 1/4"=1'–0"

Roof plan Key Notes:

1. 24"X12" G.S. DORMER VENTS TYP.
2. (1) TANKLESS WATER HEATER LOCATION
3. PLUMBING ROUTE FROM SOLAR PANEL TO W/H
4. (1)200 AMP ELECTRICAL PANEL LOCATION
5. ELECTRICAL LINE ROUTE FROM INVERTER TO ELEC.
6. LOCATION OF INVERTERS AND METERING EQUIPMENT PLUMBING
7. TERMINATION OF 1" CONDUIT FOR INSTALATION OF ELECTRICAL SOLAR PANELS
8. MIN. 250 S.F. CONTIGUOUS UNOBSTRUCTED AREA ON ROOF FOR INSTALLATION OF ELECTRICAL SOLAR PANELS
9. 48"X48" SMOKE VENT
10. RAIN WATER DOWNSPOUT
11. 17" WIDE 130 GAL. BUSMAN RAIN TANK

NOTE:

THE MAIN ELECTRICAL SERVICE PANEL SHALL HAVE A RESERVED SPACE TO ALLOW FOR INSTALLATION OF A DOUBLE POLE CIRCUIT BREAKER FOR A SOLARE ELECTRIC INSTALLATION. THE RESERVED SPACE SHALL BE POSITIONED AT THE OPPOSITE (LOAD) END FROM THE INPUT FEEDER LOCATION OR MAIN CIRCUIT LOCATION AND SHALL BE PERMANENTLY MARKED AS "FOR FUTURE SOLAR ELECTRIC".

NOTE:

THE SOLAR ZONE SHALL BE FREE OF OBSTRUCTIONS AND BE SETBACK AT LEAST TWO TIMES THE HEIGHT OF ANY OBSTRUCTION, INCLUDING BUT NOT LIMITED TO, VENTS, CHIMNEYS, AND EQUIPMENT SOLAR ZONE SHALL BE ORIENTED BETWEEN 110° AND 270° OF THE TRUE NORTH

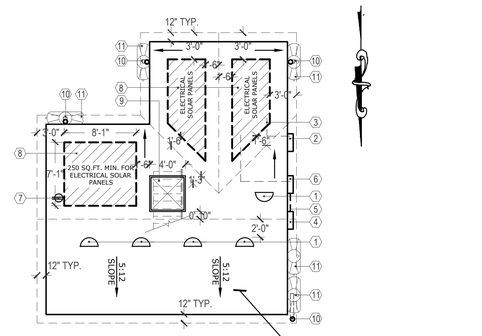

ROOF PLAN

SCALE: 1/8"=1'–0"

ROOFING:

HEAVY WEIGHT TILE BY:
EAGLE ROOFING
ICC ESR -1900

Eagle Cool Roof Tile

Eagle's ENERGY STAR and CRRC Rated Products Result in Energy Savings

Qualifying Products

Part No.	Product Weight	Profile	Name	Photo	Reflectance	Emittance	Solar Reflectivity Index
2800	Standard	Malibu	White on White*		79%	91%	99
4800	Standard	Bel Air	White on White*		79%	91%	99
3241	Standard	Capistrano	Sun Valley		71%	89%	87
4241	Standard	Bel Air	Sun Valley		71%	89%	87
2241	Standard	Malibu	Sun Valley		71%	89%	87

* May be manufactured with gray cement and a white color coat.

Note: The above rebate program is subject to change, and may be subject to additional requirements such as geographic location/climate zone, presence of a central air conditioning system, and other requirements. Homeowners and/or roofers are responsible for filing all necessary paperwork and dealing with the utility to receive rebates. Rebates are not guaranteed by Eagle Roofing Products. One square is 100 square feet. Rebate programs may be calculated either by square foot of roofing material or square foot of conditioned space, depending on each utility's program details. This rebate summary is provided only as a resource for roofers and homeowners. Should you have any questions about these programs, please contact your utility by phone or by visiting the website above. May be subject to inspection. Rebate programs are available on a first come, first serve basis and may expire without notice.

ENERGY STAR: When installed properly, this product will help reduce energy costs. Actual savings will vary based on geographic location and individual building characteristics. Consult your product manufacturer, roofing contractor, or call 1-888-STAR-YES (1-888-782-7937) for more information.

Manufacturing and Showrooms
Southern California • 800 300 3245 - Northern California • 800 998 3245 - Southwest • 800 346 5260 - Florida • 877 300 3245
Design Centers
Irvine, California • 949 553 8333 - Phoenix, Arizona • 602 346 1749 - Stockton, California • 209 932 2700 – Roseville, California • 916 789 4555
Boca Raton, Florida • 516 347 8180 - Orlando, Florida • 407 691 7100 – Clearwater, Florida • 727 531 2266

ROOFING:

HEAVY WEIGHT TILE BY:
EAGLE ROOFING
ICC ESR -1900
15 FELT USE GALV. ROOFING
NAILS (FIRE RETARDANT)
MAX. WEIGHT SHALL BE 12 PSF

INSTALLATION SHALL BE INACCORDANCE WITH MANUFACTURER'S SPECIFICATIONS

COOL ROOF:

* HEAVY WEIGHT TILE BY: EAGLE ROOFING
* WITH 3-YEAR SOLAR
* THERMAL EMITTANCE OF 0.89
* SUNVALLEY
* MANUFACTURER BRAND :EAGLE ROOFING
* CRRC PROD. ID :3241

"2-LAYERS OF GRADE "D" PAPER SHALL BE APPLIED OVER ALL WOOD BASE SHEATING."

LICENSED PROFESSIONAL ENGINEER MARTIN H. SANDOVAL C 56905 EXP. 06/30/27 CIVIL STATE OF CALIFORNIA

REVISIONS	BY
2/25/2026	C.L.

Plans drawn by:

G P. FOX DRAFTING INC.

RESIDENTIAL DRAFTING
8050 E. FLORENCE AVE, SUITE.27
DOWNEY, CA 90240
(562) 928–5467
email: gpfoxdesign@verizon.net

GENERAL NOTES

1. VERIFY MEASUREMENTS WITH CORRESPONDING CONSTRUCTED OR EXISTING CONDITIONS PRIOR TO PROCEEDING WITH THE WORK, AND NOTIFY THE DRAFTSMAN IMMEDIATELY OF SIGNIFICANT DISCREPANCIES.
2. FINISH ELEVATIONS REFERENCED ON THE DRAWINGS ARE DATUM ELEVATIONS ABOVE THE FINISH FLOOR ELEVATION. THE CONTRACTOR MUST COORDINATE DATUM–BASED ELEVATIONS SHOWN WITH SITE–SPECIFIC ELEVATIONS SHOWN ON CIVIL DRAWINGS.
3. WALL DIMENSIONS SHOWN ARE TO FACE OF WALL FINISH UNLESS SPECIFICALLY NOTED OTHERWISE.

Project:

PROPOSED NEW 2-STORY S.F.D. AND AN ADU

Sheet Title:

SECTIONS & ROOF PLAN ADU

Project for:

SALVADOR POLINA

Project: Address:

13828, 13828 1/2 CREWE ST WHITTIER , CA.90605

BLDR240320002531

Checked	G.P.
Job no.	----
Drawn	J.P.M
Date	03/19/2024

SHEET: 10 OF SHEETS

BUILDING AND SAFETY DIVISION
Department of Public Works
APPROVED
UNDER LOS ANGELES COUNTY CODE
TITLES 26, 30 AND 31
DMcCombs
PUBLIC WORKS
04/06/2026 11:18:30 AM

This set of plans and specifications must be kept on the job site at all times, and it is unlawful to make any changes, modifications or deviations in these plans or specifications without the prior written permission of the Building Official. The approval of these plans and specifications does not permit, and shall not be deemed to permit, under any circumstances, be deemed to permit or to be an approval of any work or activity that violates any provisions of any County Ordinance or State Law.

Foundation Notes:

1. 4" CONC. SLAB W/ #4 DEFORMED REINF. BARS @ 16" O/C EA. WAY W/ 4" MIN. THICK BASE OF 1/2" OR LARGER, CLEAN AGREGATE OVER 10-MIL VAPOR BARRIER.

2. SATURATE THE SOIL 18" DEEP WITH WATER BEFORE PLACING CONCRETE.

3. SECURE ALL HOLDDOWN HARDWARE IN PLACE BEFORE FIRST FOUNDATION INSPECTION. HOLD-DOWNS SHALL BE RE-TIGHTENED JUST PRIOR TO COVERING WALL FRAMING.

4. PROVIDE APPROVED WASHERS AT ALL HOLDOWNS AND ANCHOR BOLTS.

5. ALL ANCHOR BOLTS SHALL BE EMBED 7" INTO CONT. FOOTINGS.

6. CONCRETE FOR GRADE BEAMS SHALL HAVE A COMPRESSIVE STRESS OF 3000 psi AT 28 DAYS. PROVIDE CONT INSPECTION BY A REGISTERED DEPUTY INSPECTOR WHERE OCCURS.

7. LIMIT SOIL BEARING PRESSURE TO 1000PSF EXCEPT WHERE SOILS REPORT REQUIRED.

8. TYPICAL ANCHOR BOLTS - 5/8"Ø X 10"@SEE PLAN EXCEPT AT SHEAR WALLS PER SCHEDULE.

9. PROVIDE A GI WEEP SCREED NOT MORE THAN 4" ABOVE THE FINISH GRADE AT FTG.

10. ALL REBARS SHALL BE 3" CLEAR OF SOIL.

11. LAYOUT FOUNDATION USING ARCHITECTURAL DIMENSIONS OF FIRST FLOOR PLANS.

12. ALL FOUNDATION SILL PLATES SHALL BE PRESSURE TREATED OR FOUNDATION GRADE REDWOOD.

13. ALL ANCHOR BOLTS SHALL HAVE AN EDGE DISTANCE OF 1-3/4".

14. FOUNDATION CRIPPLE WALLS SHALL SUPPORTED FRAMED OF STUDS NOT LESS IN SIZE THAN THE STUDDING ABOVE WITH A MINIMUM STUD LENGTH OF 14" OR SHALL BE FRAMED OF SOLID BLOCKING WHEN OVER 4FT IN HEIGHT CRIPPLE WALLS SHALL BE BRACED WITH 3/8" STRUCTURAL PANELS WITH 8d NAILS AT 4" OVER 50% OF WALL LENGTH MIN.

"ALL HOLDOWN ANCHORS SHALL BE TIED IN PLACE PRIOR TO CALLING FOUNDATION INSPECTION".

"IF SOIL IS FOUND TO BE EXPANSIVE, THE FOOTINGS MUST MEET THE FOLLOWING MINIMUM REQUIREMENTS: 1804.4.

A) DEPTH OF FOOTING BELOW THE NATURAL AND FINISH GRADES SHALL NOT BE LESS THAN 24 INCHES FOR EXTERIOR AND 18 INCHES FOR INTERIOR FOOTINGS.

B) EXTERIOR WALLS AND INTERIOR BEARING WALLS SHALL BE SUPPORTED ON CONTINUOUS FOOTINGS.

C) FOOTINGS SHALL BE REINFORCED WITH MINIMUM FOUR - 1 INCH DIAMETER DEFORMED REINFORCING BARS. TWO BARS SHALL BE PLACED 4 INCHES OF THE BOTTOM OF THE FOOTING AND TWO BARS WITHIN 4 INCHES OF THE TOP OF THE FOOTINGS.

D) THE SOIL BELOW AN INTERIOR CONCRETE SLAB SHALL BE SATURATED WITH MOISTURE TO A DEPTH OF 18 INCHES PRIOR TO PLACING THE CONCRETE."

FOUND. BOLTS:

USE 5/8" DIA. X 10" A. BOLTS @ SEE SCH. O/C 12" FROM CORNERS & ENDS (7" MIN. EMBEDMENT). W/ 3"X3"X0.229" PLATE WASHERS

ANCHOR BOLTS:

1 = 5/8" DIA. X 10" A. BOLTS @ 48" O/C

2 = 5/8" DIA. X 10" A. BOLTS @ 42" O/C

3 = 5/8" DIA. X 10" A. BOLTS @ 32" O/C

CONT. FTGS.

CF1= 15" WIDE X 24" DEEP FTG. W/ 2-#4 TOP & BOTT. TYP.

PAD FOOTING SCHEDULE			
TYPE	AREA	DEPTH	REBAR
P1	33" SQ.	24"	4#-5 EA. WAY

NOTE: FOR EXPANSIVE SOIL CONDITIONS ALL EXTERIOR FOOTINGS SHALL BE 24" BELOW NATURAL GRADE AND ALL INTERIOR FOOTINGS 18" BELOW.

NOTES:

CONTINUOUS SPECIAL INSPECTION BY A REGISTERED DEPUTY INSPECTOR IS REQUIRED FOR FIELD WELDING, CONCRETE STRENGTH f'c>2500 psi, HIGH STRENGTH BOLTING, SPRAYED-ON FIREPROOFING, ENGINEERED MASONRY, HIGH-LIFT GROUTING, PRE-STRESSED CONCRETE, HIGH LOAD DIAPHRAGMS AND SPECIAL MOMENT-RESISTING CONCRETE FRAMES.

SOILS NOTE:

PRIOR TO REQUESTING A BUILDING DEPARTMENT FOUNDATION INSPECTION, THE SOILS ENGINEER SLASH GEOTECHNICAL CONSULTANT SHOW INSPECT AND APPROVE THE FOUNDATION EXCAVATION. (106.4.3)

HAVE THE CONSULTING SOILS LAST GEOTECHNICAL ENGINEER REVIEW AND APPROVE THE FOUNDATION PLANS AND FOUNDATION DETAILS . (106.4.3)

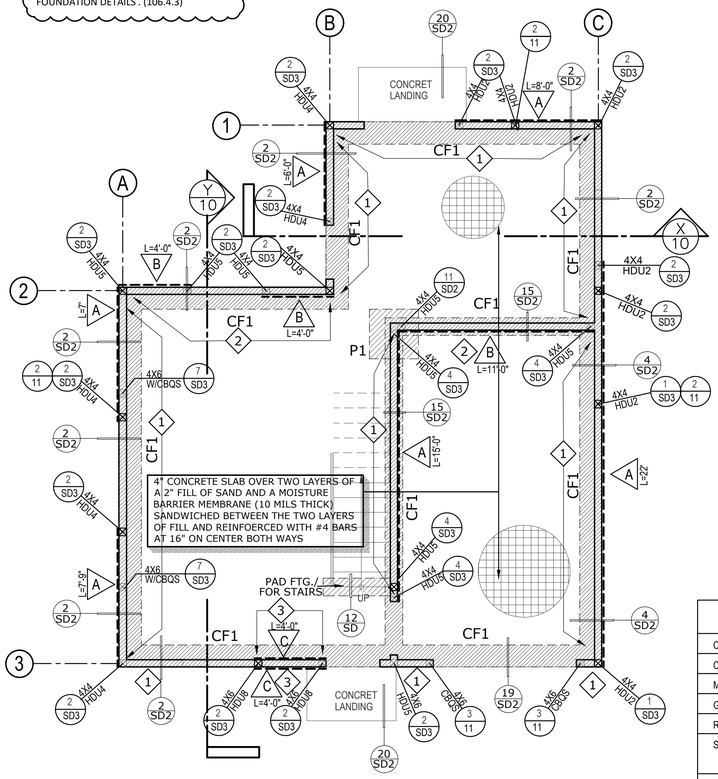

FOUNDATION PLAN

SCALE: 1/4"=1'-0"

BUILDING AND SAFETY DIVISION
Department of Public Works
APPROVED
UNDER LOS ANGELES COUNTY CODE
TITLES 26, 30 AND 31
DMcCombs
PUBLIC WORKS
04/08/2026 11:18:30 AM

This set of plans and specifications must be kept at the job site at all times and it is unlawful to make any changes, modifications or alterations to these plans or specifications without the prior written permission of the Building Official. The stamping of this set of plans and specifications SHALL NOT, under any circumstances, be deemed to permit or to be an approval of any work or activity that violates any provisions of any County Ordinance or State Law.

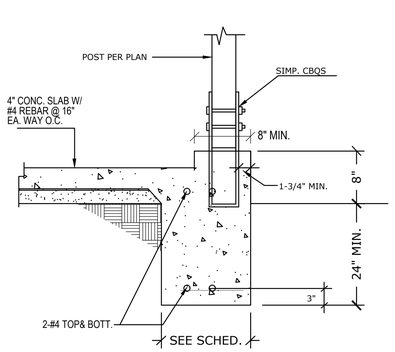

3 CB @GARAGE FTG. DETAIL

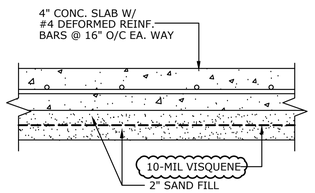

1 TYPICAL SLAB DETAIL

NOTE:

PROTECTION OF WOOD AND WOOD BASED PRODUCTS FROM DECY SHALL BE PROVIDED IN THE LOCATIONS SPECIFIED PER SECTION R317.1 BY THE USE OF NATURALLY DURABLE WOOD OR WOOD THAT IS PRESERVATIVE-TREATED IN ACCORDANCE WITH AWPA U1 FOR THE SPECIES, PRODUCT, PRESERVATIVE AND END USE. PRESERVATIVES SHALL BE LISTED IN SECTION 4 OF AWPA U1.

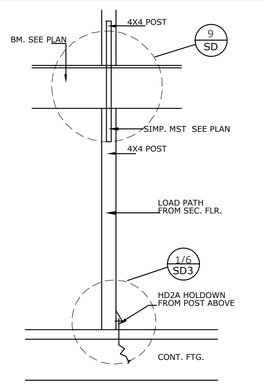

2 HOLDOWN DETAIL

NOTE: IF ADVERSE SOIL CONDITIONS ARE ENCOUNTERED, A SOILS INVESTIGATION REPORT MAY BE REQUIRED.

REQUIRED SPECIAL INSPECTION

IN ADDITION TO THE REGULAR INSPECTIONS, THE FOLLOWING ITEMS WILL ALSO REQUIRE SPECIAL INSPECTION IN ACCORDANCE WITH SEC. 1701 OF THE UNIFORM BUILDING CODE.

ITEM	REQUIRED
DUCT TESTING	SPECIAL INSPECTION
WOOD SHEARWALL PANELS WITH NAILING SPACED 4" O/C OR LESS	SPECIAL INSPECTION
STRUCTURAL OBSERVATION	BY: ENGINEER OF RECORD

SPECIFICATIONS

CONCRETE	STANDARD GRADE f'c= 2500 PSI
CONCRETE BLOCK	GRADE N PER ASTM C-90 (NO SPECIAL INSPECTION UNO)
MORTAR	TYPE S 1:1/2:4 CEMENT TO LIME TO SAND
GROUT	1:3:2 CEMENT TO SAND TO PEA GRAVEL f'c=2000 PSI
REINFORCING STELL	PER ASTM A-615
STRUCTURAL STEEL	SHAPES PER ASTM A-36
	COLUMS PER ASTM A-53 GRADE B
BOLTS	PER ASTM A-307
WELDING	ALL FIELD WELDING BY CERTIFY WELDER E-70 XX ELECTRODES
LUMBER	DOUGLAS FIR GRADING PER WCLIB RULE # 16
	SIZE PER PS 20-70
	JOIST, PLANKS, GRADE #2 OR BETTER
	POSTS & BEAMS GRADE #1 OR BETTER
PLYWOOD	PER PSI - 95 WITH EXTERIOR TYPE GLUE
ROOF DIAPHRAGM	1/2" CDX W/8d @ 6:12
FLOOR DIAPHRAGM	5/8" CDX W/ 10d @ 4:6:10
SOIL	PER UBC T-18/A

"WOOD FRAMING MEMBERS: GRADE AND SPECIES OF ALL LUMBER. "MUST BE GRADE MARKED."

NOTES:

CONTRACTORS RESPONSIBLE FOR THE CONSTRUCTION OF A WIND OR SEISMIC FORCE RESISTING SYSTEM/COMPONENT LISTED IN THE "STATEMENT OF SPECIAL INSPECTION" SHALL SUBMIT A WRITTEN STATEMENTE OF RESPONSABILITY TO THE LADBS INSPECTORS AND THE OWNER PRIOR TO THE COMMENCEMENT OF WORK ON SUCH SYSTEM OR COMPONENT PER SEC 1709.1

CONTINUOUS SPECIAL INSPECTION BY A REGISTERED DEPUTY INSPECTOR IS REQUIRED FOR FIELD WELDING, CONCRETE STRENGTH f'c>2500 psi, HIGH STRENGTH BOLTING, SPRAYED-ON FIREPROOFING, ENGINEERED MASONRY, HIGH-LIFT GROUTING, PRE-STRESSED CONCRETE, HIGH LOAD DIAPHRAGMS AND SPECIAL MOMENT-RESISTING CONCRETE FRAMES, AND HELICAL PILE FOUNDATIONS.

FOUNDATION SILLS SHALL BE NATURALLY DURABLE OR PRESERVATIVE-TREATED WOOD.

FIELD WELDING TO BE DONE BY WELDERS CERTIFIED BY THE LADBS FOR (STRUCTURAL STEEL)(REINFORCING STEEL)(LIGHT GAUGE STEEL). CONTINUOUS INSPECTION BY A DEPUTY INSPECTOR IS REQUIRED.

SHOP WELDS MUST BE PERFORMED IN A LADBS LICENCED FABRICATOR'S SHOP.

LADBS LICENCED FABRICATOR IS REQUIRED FOR (TRUSSES), (STRUCTURAL STEEL) ...

GLUE-LAMINATED TIMBERS MUST BE FABRICATED IN A LADBS LICENCED SHOP. IDENTIFY GRADE SYMBOL AND LAMINATION SPECIES PER 2012 NDS SUPPLEMENT TABLE 5-A.

PROVIDE LEAD HOLE 40%-70% OF THREADED SHANK DIA. AND FULL IDA. FOR SMOOTH SHANK PORTION."

PERIODIC SPECIAL INSPECTION IS REQUIRED FOR WOOD SHEAR WALLS, SHEAR PANELS, AND DIAPHRAGMS, INCLUDING NAILING, BOLTING, ANCHORING, AND OTHER FASTENING TO COMPONENTS OF THE SEISMIC FORCE RESISTING SYSTEM. SPECIAL INSPECTION BY A DEPUTY INSPECTOR IS REQUIRED WHERE THE FASTENER SPACING OF THE SHEATHING IS 4 INCHES ON CENTER OR LESS.

SPECIAL ACTIVITY INSPECTION IS REQUIRED FOR (BUILDINGS OVER 5 STORIES OR 60' IN HEIGHT) (BUILDINGS OVER 50,000 SQ. FT. OF GROUND FLOOR AREA) (BUILDINGS OVER 200,000 SQ. FT. OF FLOOR AREA).

A COPY OF THE LOS ANGELES RESEARCH REPORT AND/OR CONDITIONS OF LISTING SHALL BE MADE AVAILABLE AT THE JOB SITE.

IF ADVERSE SOIL CONDITIONS ARE ENCOUNTERED, A SOILS INVESTIGATION REPORT MAY BE REQUIRED.

"FASTENERS IN PRESERVATIVE TREATED WOOD OR FIRE RETARDANT TREATED WOOD SHALL BE OF HOT DIPPED ZINC COATED GALVANIZED STEEL OR STAINLESS STEEL.

REVISIONS	BY
4/28/2021 BUILDING AND SAFETY DIVISION	C.L.
2/25/2026	C.L.
3/13/2026	C.L.

Plans drawn by:

G P. FOX DRAFTING INC.

RESIDENTIAL DRAFTING
8050 E. FLORENCE AVE, SUITE.27
DOWNEY, CA 90240
(562) 928-5467

email: gpfoxdesign@verizon.net

GENERAL NOTES

1. VERIFY MEASUREMENTS WITH CORRESPONDING CONSTRUCTED OR EXISTING CONDITIONS PRIOR TO PROCEEDING WITH THE WORK, AND NOTIFY THE DRAFTSMAN IMMEDIATELY OF SIGNIFICANT DISCREPANCIES.
2. FINISH ELEVATIONS REFERENCED ON THE DRAWINGS ARE DATUM ELEVATIONS ABOVE THE FINISH FLOOR ELEVATION. THE CONTRACTOR MUST COORDINATE DATUM-BASED ELEVATIONS SHOWN WITH SITE-SPECIFIC ELEVATIONS SHOWN ON CIVIL DRAWINGS.
3. WALL DIMENSIONS SHOWN ARE TO FACE OF WALL FINISH UNLESS SPECIFICALLY NOTED OTHERWISE.

LICENCED PROFESSIONAL ENGINEER MARTIN H. SANDOVAL C 56905 EXP. 06/30/27 CIVIL STATE OF CALIFORNIA

Project:

PROPOSED NEW 2-STORY S.F.D. AND AN ADU

Sheet Title:

FOUNDATION PLAN ADU

Project for:

SALVADOR POLINA

Project: Address:

13828, 13828 1/2 CREWE ST WHITTIER , CA.90605

BLDR240320002531

Checked	G.P.
Job no.	----
Drawn	J.P.M
Date	03/19/2024

SHEET: **11** OF SHEETS

Framing Notes:

1. ALL BEAMS SHALL HAVE A MINIMUMUM 4X4 POSTS AT EACH END.

2. PROVIDE 4X BEAM BELOW ALL SHEAR WALLS PARALLEL TO JOISTS AND CONTINUOUS 4X BLK'G WHERE WALLS ARE PERPENDICULAR .

3. PROVIDE DOUBLE JOISTS UNDER ALL PARALLEL PARTITIONS AND CONTINUOUS 2X BLOCKING UNDER PERPENDICULAR WALLS.

4. EXTEND ALL INTERIOR SHEAR WALLS TO BOTTOM OF ROOF SHEATHING.

5. VERIFY ALL DIMENSIONS BASED ON ARCHITECTURAL.

6. INSTALL ALL MANUFACTURED PRODUCTS PER INSTRUCTIONS AS APPROVED BY BUILDING DEPT

7.BEARING WALL STUDS SHALL NOT BE NOTCHED MORE THAN 25% BORED HOLES SHALL NOT BE MORE THAN 40%

8. PROVIDE SOLID BLOCKING AT ALL HORIZONTAL JOINTS IN BRACED WALL PANELS.

9. RAFTER TIES SHALL BE SPACED AT 48"OC MAX .

10. RAFTERS SHALL BE FRAMED DIRECTLY OPPOSITE EACH OTHER AT RIDGES,HIPS & VALLEYS.

11.FLOOR JOISTS SHALL BESUPPORTED LATERALLY AT ENDS AND AT EACH SUPPORT BY SOLID BLOCKING NO LESS THAN 2X MIN. THICK AND FULL DEPTH OF JOISTS SEE SHEAR TRANSFER DETAILS FOR SIZE.

12. WOOD STRUCTURAL PANEL ROOF SHEATHING EXPOSED ON THE UNDERSIDE SHALL BE BONDED WITH EXTERIOR.

13. WOOD STRUCTURAL PANEL DIAPHRAGMS AND SHEAR WALLS SHALL BE CONSTRUCTED USING EXTERIOR GLUE AND SHEETS NOT LESS THAN 4FT X 8FT EXCEPT AT EXCEPT AT BOUNDARIES AND CHANGES IN FRAMING WHERE MINIMUM SHEET DIMENSION SHALL BE 24INCHES UNLESS ALL EDGES OF UNDERSIZED SHEETS ARE SUPPORTED BY FRAMING MEMBER OR BLOCKING.

14. FIRE STOPS SHALL BE PROVIDED IN THE FOLLOWING LOCATIONS:

a) CONCEALED SPACES OF STUD WALLS & PARTITIONS INCLUDING FURRED SPACES AT CEIL'G & FLOOR LEVELS AND AT 10FT INTERVALS VERTICAL & HORIZONTAL.

b) AT ALL INTERCONNECTION BETWEEN VERTICAL AND HORIZONTAL SPACES eg. SOFFITS,DROPS& COVES.

c) IN CONCEALED SPACES BETWEEN STAIR STRINGERS AT TOP & BOTTOM OF RUN AND BETWEEN STUDS ALONG AND IN LINE WITH THE RUN OF STAIRS IF THE WALLS UNDER THE STAIRS ARE UNFINISHED .

d) IN OPENINGS AROUND VENTS,PIPES,DUCTS CHIMNEYS AND SIMILAR OPENINGS WHICH AFFORD A PASSAGE FOR FIRE AT CEILING AND FLOOR LEVELS WITH NON- COMBUSTIBLE MATERIALS.

e) AT OPENINGS BETWEEN ATTIC SPACES AND CHIMNEY CHASES FOR RACTORY BUILT CHIMNEYS FOR FIRE AT CEILING AND FLOOR LEVELS WITH NON-MAXIMUM DEPTH OF NOTCHING AT THE ENDS OF THE MEMBER SHALL NOT EXCEED ONE-FOURTH THE DEPTH OF THE MEMBER.

MAXIMUM DEPTH OF NOTCHING AT THE ENDS OF THE MEMBER SHALL NOT EXCEED ONE-FOURTH THE DEPTH OF THE MEMBER.

NOTCHES IN THE TOP OR BOTTOM OF THE MEMEBER SHALL NOT EXCEED ONE-SIXTH OF THE DEPTH, AND SHALL NOT BE LOCATED IN THE MIDDLE THIRD OF THE SPAN.

PROVIDE DOUBLE JOIST UNDER PARALLEL BEARING PARTITIONS. A RIDGE BOARD NOT LESS IN DEPTH THAN THE CUT END OF THE RAFTER IS REQUIRED.

A RIDGE BOARD NOT LESS IN DEPTH THAN THE CUT END OF THE RAFTER IS REQUIRED.
" LAG BOLTS : PROVIDE LEAD HOLE 40%-70% OF THREADED SHANK DIA. AND FULL DIA. FOR SMOOTH SHANK PORTION " 97 NDS

ALL WOOD IN CONTACT WITH CONCRETE FOUNDATION SILLS SHALL BE PRESSURE TREATED. OR FOUNDATION GRADE REDWOOD.

FRAME ALL INTERIOR SHEAR WALLS TO ROOF.

"SOLID BLOCKING SHALL BE PROVIDED AT ALL HORIZONTAL JOINTS OCCURRING IN BRACED WALL PANELS."

"PLATE WASHERS ARE REQUIRED FOR ALL HOLD DOWNS."

"HOLD-DOWN CONNECTORS SHALL BE TIGHTENED JUST PRIOR TO COVERING THE WALL FRAMING."

"FOR CONVENTIONAL LIGHT-FRAME CONSTRUCTION THE MINIMUM SIZE ANCHOR BOLT IS 5/8" WITH 7" EMBEDMENT, 7 BOLT DIAMETER END DISTANCE, 6' SPACING, AND PLATE WASHERS PER TABLE 23-II-L."

"DRAFT STOPS SHALL BE PROVIDED WITHIN A CONCEALED FLOOR-CEILING ASSEMBLY FORMED OF COMBUSTIBLE CONSTRUCTION. (1000 SQ.FT. & 60' MAX. BETWEEN DRAFT STOPS) 91.708.3.1.1.1."

"DRAFT STOPS SHALL BE PROVIDED WITHIN ATTICS, MANSARDS, OVERHANGS AND SIMILAR CONCEALED SPACES FORMED OF COMBUSTIBLE CONSTRUCTION.91.708.3.1.2.2 (3000 SQ. FT. & 60 MAX.)"

"BEARING WALL STUDS CANNOT BE NOTCHED % OF THEIR WIDTH. BORED MORE THAN 25 HOLES CANNOT HAVE A DIAMETER GREATER THAN 40 % OF THE STUD WIDTH."

STRUCTURAL DESIGN BASIS

VERTICAL DESIGN

-ROOF DEAD LOAD = 12 psf
-ROOF LIVE LOAD = 20 psf
-ROOF SNOW LOAD = N/A
-FLOOR DEAD LOAD = 15 psf
-FLOOR LIVE LOAD = 40.0 psf

LATERAL DESIGN

SEISMIC:

-SITE CLASS: D — IMPORTANCE FACTOR, 1: 1.0
-OCCUPANCY CATEGORY: II — SEISMIC DESIGN CATEGORY : D
-Ss = 1.789 S1 = 0.649 — LATITUDE: 33.9619
-Sds = 1.193 Sd1 = 0.649 — LONGITUDE: -118.2715
-SEISMIC FORCE RESISTING SYSTEM(S): — PLYWD. SHEAR WALLS
-Cs = Sds / (R/I) = 0.183 / 1.4 (ASD) — R = 6.5 / ρ = 1.3
-V = Cs * W (ASD) = 0.131 * W

WIND:

-BASIC WIND SPEED = 110 MPH — IMPORTANCE FACTOR = 1.0
-OCCUPANCY CATEGORY: II — WIND EXPOSURE CAT. = C
-HEIGHT & EXPOSURE ADJ. COEFF: 1.0
-TOPOGRAPHIC ADJ. FACTOR: 1.0
-SIMPLIFIED DESIGN WIND PRESSURE: 22.1 PSF
-DESIGN WIND PRESSURE = 22.1 PSF

FOUNDATION DESIGN

-SOIL – TYPE 5 (SITE CLASS D USED FOR LATERAL DESING)
-ALLOWABLE SOIL BEARING PRESSURE – 1,500 PSF
-RETAINING WALLS:
RESTRAINED LOAD (EFP) = NA PCF
CANTILEVERED LOAD (EFP) = NA PCF (LEVEL)
PASSIVE SOIL PRESSURE = NA PCF / 2,000 PCF MAX.
COEFFICIENT OF FRICTION = NA
-SOILS REPORT BY: NA

02-24-23

2023 LOS ANGELES COUNTY CODE SHEARWALL SCHEDULE

SHEAR-WALL No.	STRUCTURAL I APA-RATED WOOD STRUCTURAL PANEL THICKNESS	COMMON NAIL SPACING @ BOUNDARIES & EDGES (B.N. & E.N.) FIELD NAILING @ 12" O.C.	ALLOWABLE SHEAR / FT (WOOD STUDS @16" O.C., U.N.0) (LIMITED TO 75%)	2"X CLG. JSTS. @ 16" O/C			
				5/8" ⌀ A.B. SPACING 2 2x SILL V= 1184# 3x SILL V= 1520# O.C.	FRAMING CLIP SPACING V = 450# O.C.	16d COMMON NAIL SPACING OR GALV. BOX 2x SOLE PLATE ONLY: V= 121# 3 O.C.	1/4" LAG x 6" LONG 3x SOLE PLATE ONLY: V= 537# O.C.
5	7/8" STUCCO	No. 11 GA. @ 6" O.C.	90 #/FT.	48"	A35 @ 30"	8"	36"
A	15/32"	8d @ 6" o.c.	280#/FT.	48"	A35 @ 18"	5"	23"
A 1, 5	15/32"	8d @ 4" o.c.	430#/FT.	42"	A35 @ 12"	3"	15"
C 1, 5	15/32"	8d @ 3" o.c.	550#/FT.	32"	A35 @ 12"	3"	24"
D 1, 5	15/32"	8d @ 2" o.c.	730#/FT.	24"	A35 @ 7"	→	9"
E 1, 5	15/32"	10d @ 2" o.c.	850#/FT.	20"	A35 @ 6"	→	6"

1. FRAMING AT FOUNDATION SILL PLATES AND ADJOINING PANEL EDGE STUDS SHALL BE A SINGLE 3x NOMINAL MEMBER, AND ALL NAILS SHALL BE STAGGERED WITH 1/2" EDGE DISTANCE.
2. SIMPSON BP5/8-3 BEARING PLATES (LARR 25293), OR OTHER LISTED MAKE, APPROVED BY BUILDING OFFICIAL, SHALL BE USED WITH ALL 5/8" DIA. ANCHORS. 5/8" DIA. SIMPSON TITAN HD ANCHORS (ICC-ES-ESER-1056/LARR# 25560) WITH 4\" MIN. EMBEDMENT, MAY BE USED IN LIEU OF 5/8" DIA. ANCHOR BOLTS AT EXISTING FOOTINGS WITH SAME SPACING PER TABLE ABOVE. SPECIAL INSPECTION REQUIRED FOR ALL EPOXY ANCHOR INSTALLATIONS.
3. ALL SILL NAILING SHALL BE STAGGERED 1/2" MINIMUM. (TYPICAL)
4. WHEN A SHEARWALL IS SPECIFIED ON BOTH SIDES OF WALL, ALL SLIDING ANCHOR CONNECTORS SHALL BE ATTACHED WITH SPACINGS FROM THE TABLE ABOVE TO BE REDUCED BY HALF.
5. SPECIAL INSPECTION REQUIRED

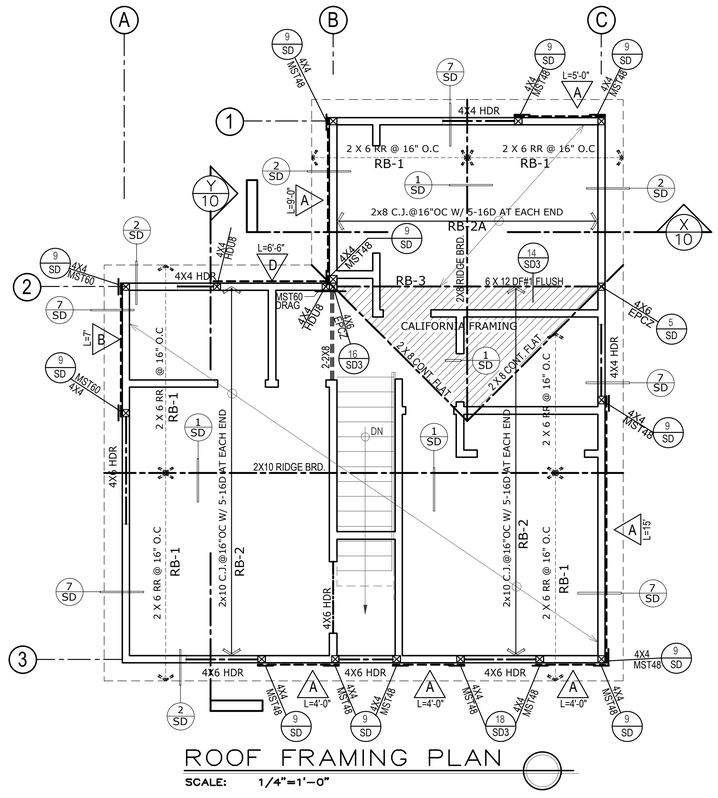
A
B
C
1
2
3
4X4 HDR
2 X 6 RR @ 16" O.C
RB-1
RB-2A
2x8 C.J.@16"OC W/ 5-16D AT EACH END
RB-3
6 X 12 DF#1 FLUSH
CALIFORNIA FRAMING
2X8 CONT FLAT
2X8 RIDGE BRD.
2X10 RIDGE BRD.
4X6 HDR
4X8 HDR
2x10 C.J.@16"OC W/ 5-16D AT EACH END
RB-2
FB-3
FB-4
FB-2
4-2x14 STRINGER TYP.
6X12 #1 BM
2-2X12 F.J.
2X12 F.J @ 16" O.C
FB-1
FB-5
6X12 DF#1
4X12 HDR
4X6 POST ECC
4X4 W/EPCZ HDU4
4X4 HDU2
4X6 EPCZ
4X4 MST48
4X4 HDU5
4X4 HDU8
4X6 HDU8
4X6 HDU6
4X4 HDU6
4X6 EPCZ
4X4 HDU4
4X6 HDU4
4X4 MST60
4X4 HDU8
4X4 HDU6
4X4 HDU5
4X4 HDU2
4X6 EPCZ
4X4 MST48
4X4 HDU4
4X6 HDU6
4X4 HDU8
4X6 HDU8

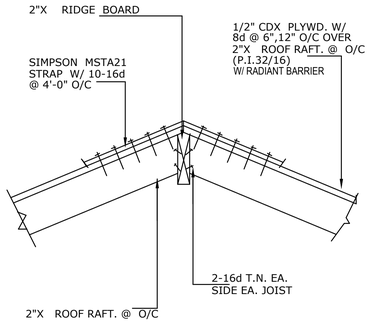

RIDGE & RAFT. DETAIL 1

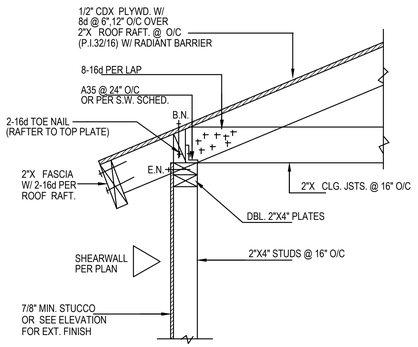

2

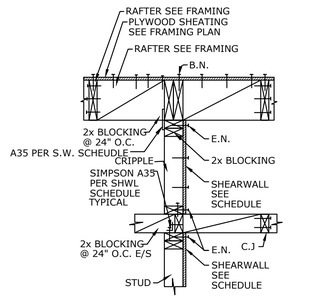

TYPICAL SHEAR WALL TO ROOF @ INTERIOR WALL 3

NOT IN USE 4

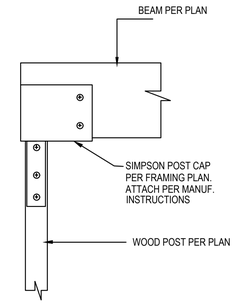

SIMPSON POST CAP 5

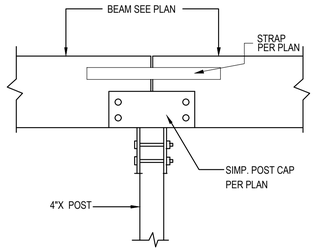

BEAM & POST DETAIL 6

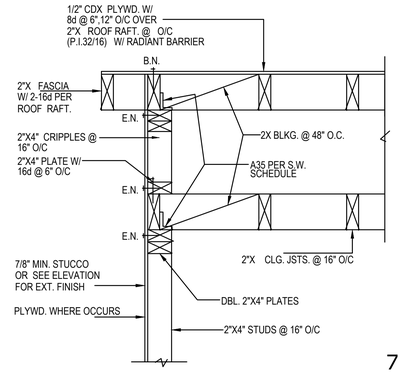

7

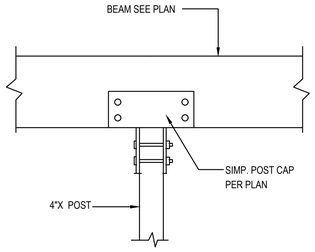

BEAM & POST DETAIL 8

NAILS:
FOR MST37= USE 11-16ds EA. END= 22 TOTAL
FOR MST48= USE 17-16ds EA. END= 34 TOTAL
FOR MST60= USE 24-16ds EA. END= 48 TOTAL
FOR MST72= USE 24-16ds EA. END= 48 TOTAL

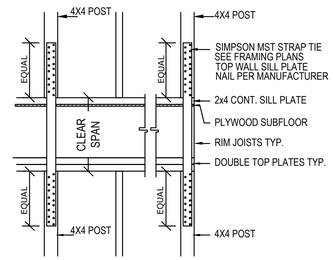

FLOOR TO FLOOR MST CONNECTION 9

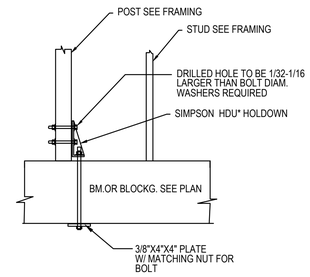

HOLDDOWN DETAIL 10

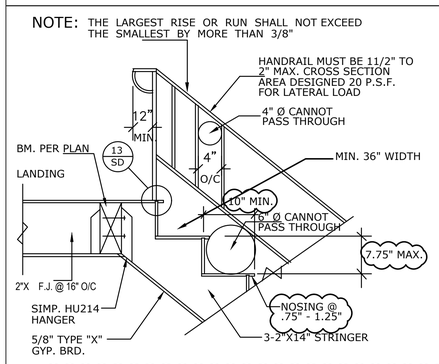

WOOD STAIRS DETAIL 11

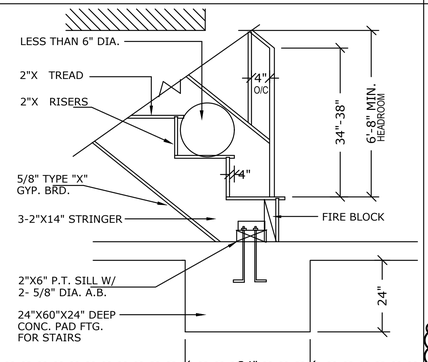

WOOD STAIRS DETAIL 12

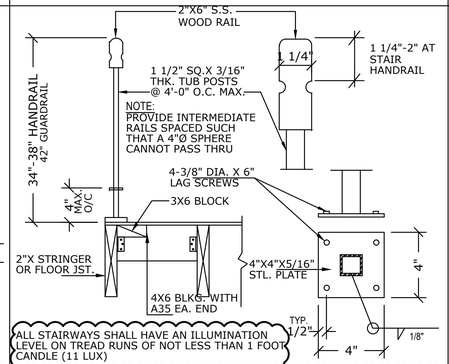

HAND & GUARDRAIL DETAIL 13

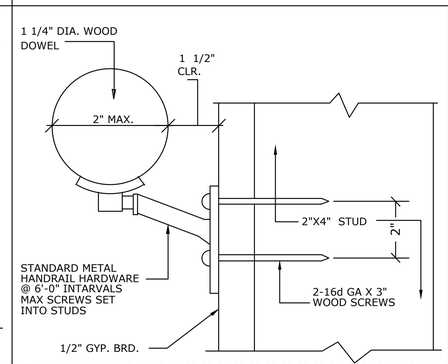

HANDRAIL DETAIL 14

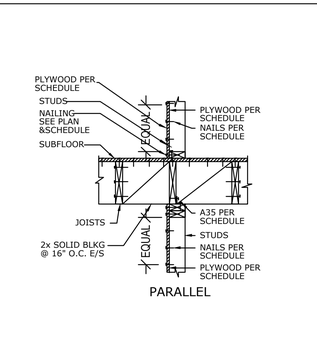

PARALLEL

SHEAR TRANSFER FLOOR 15

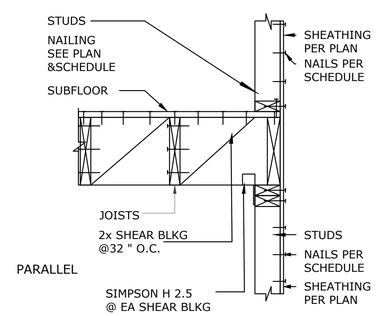

PARALLEL

SHEAR TRANSFER FLOOR 16

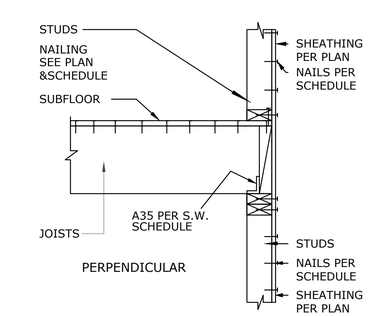

PERPENDICULAR

SHEAR TRANSFER FLOOR 17

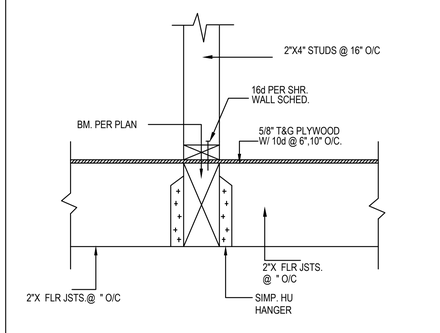

FLR. JSTS. - BM. DETAIL 18

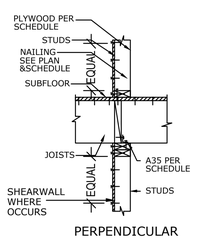

PERPENDICULAR

SHEAR WALL @ INTERIOR FLOOR PERPENDICULAR TO WALL 19

LICENSED PROFESSIONAL ENGINEER
MARTIN H. SANDOVAL
C 56905
EXP. 06/30/27
CIVIL
STATE OF CALIFORNIA

BUILDING AND SAFETY DIVISION
Department of Public Works
APPROVED
UNDER LOS ANGELES COUNTY CODE
TITLES 26, 30 AND 31
DMcComb
PUBLIC WORKS
04/08/2026 11:18:30 AM

This set of plans and specifications must be kept at the job site at all times; and it is unlawful to make any changes, modifications or deviations to these plans or specifications without the prior written permission of the Building Official. The stamping of this set of plans and specifications SHALL NOT, under any circumstances, be deemed to permit or to be an approval of any work or activity that violates any provisions of any County Ordinance or State Law

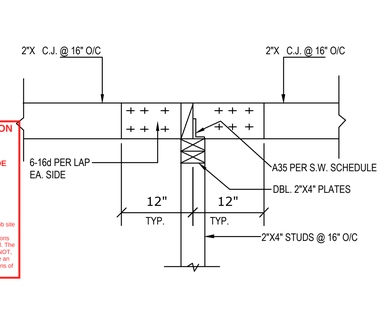

20

REVISIONS	BY
4/28/2021 BUILDING AND SAFETY DIVISION	C.L.
2/25/2026	C.L.

Plans drawn by:

G P. FOX DRAFTING INC.
RESIDENTIAL DRAFTING
8050 E. FLORENCE AVE, SUITE.27
DOWNEY, CA 90240
(562) 928-5467
email: gpfoxdesign@verizon.net

GENERAL NOTES

1. VERIFY MEASUREMENTS WITH CORRESPONDING CONSTRUCTED OR EXISTING CONDITIONS PRIOR TO PROCEEDING WITH THE WORK, AND NOTIFY THE DRAFTSMAN IMMEDIATELY OF SIGNIFICANT DISCREPANCIES.
2. FINISH ELEVATIONS REFERENCED ON THE DRAWINGS ARE DATUM ELEVATIONS ABOVE THE FINISH FLOOR ELEVATION. THE CONTRACTOR MUST COORDINATE DATUM-BASED ELEVATIONS SHOWN WITH SITE-SPECIFIC ELEVATIONS SHOWN ON CIVIL DRAWINGS.
3. WALL DIMENSIONS SHOWN ARE TO FACE OF WALL FINISH UNLESS SPECIFICALLY NOTED OTHERWISE.

Project:

PROPOSED NEW 2-STORY S.F.D. AND AN ADU

Sheet Title:

DETAILS

Project for:

SALVADOR POLINA

Project:
Address:

13828, 13828 1/2 CREWE ST WHITTIER , CA.90605

Checked	G.P.
Job no.	----
Drawn	J.P.M
Date	03/19/2024

SHEET:

SD

OF SHEETS

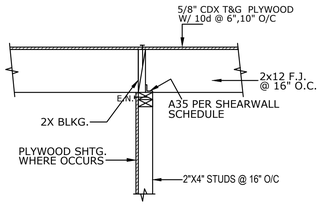

1

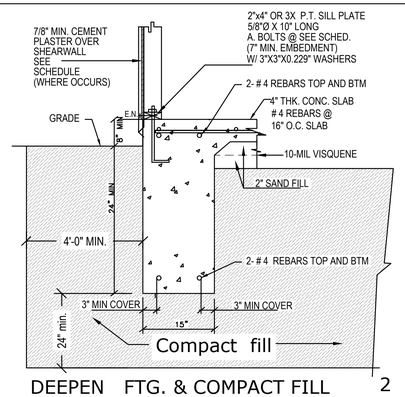

DEEPEN FTG. & COMPACT FILL

2

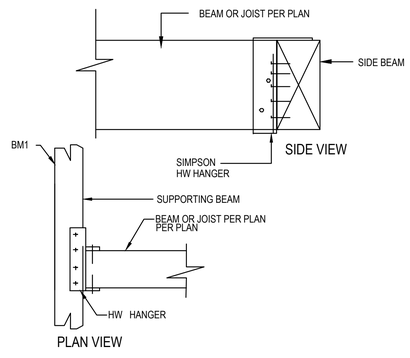

BEAM HANGER

3

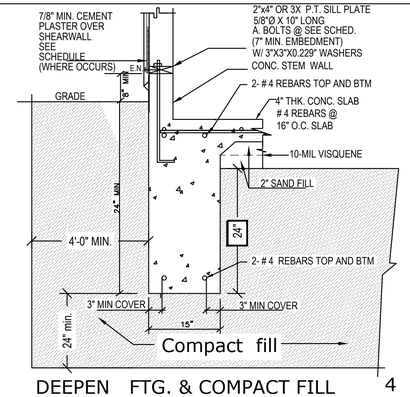

DEEPEN FTG. & COMPACT FILL

4

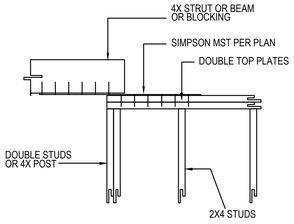

5

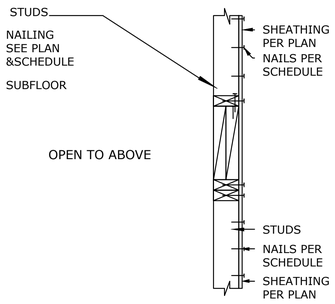

SHEAR TRANSFER FLOOR

6

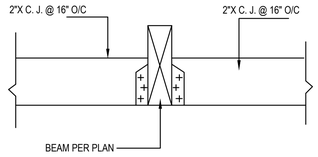

7

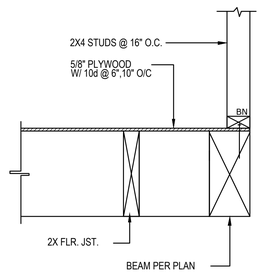

8

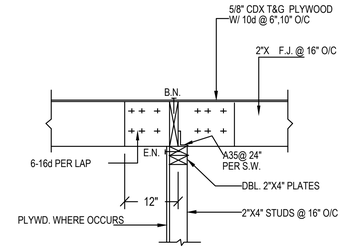

9

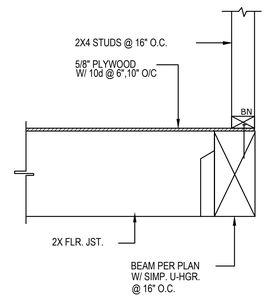

10

HOLDOWN	ANCHOR DIA.	FASTNERS	EDGE DIST.	EMBEDMENT
HDU2	5/8"	6-SDS 1/4"X2 1/2"	8"	12"
HDU4	5/8"	10-SDS 1/4"X2 1/2"	8"	12"
HDU5	5/8"	14-SDS 1/4"X2 1/2"	8"	12"
HDU8	7/8"	20-SDS 1/4"X2 1/2"	12"	15"

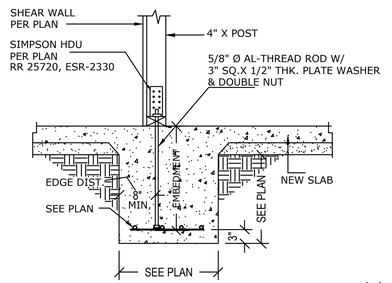

HOLDOWN @ PAD FOOTING

11

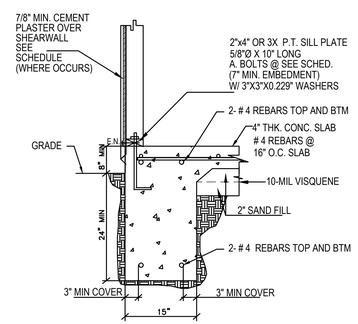

TYPICAL

12

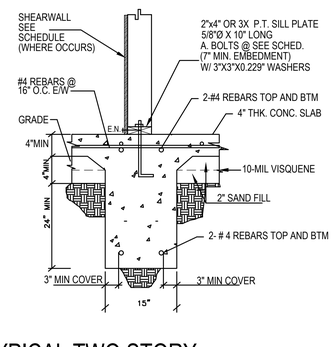

TYPICAL TWO STORY

13

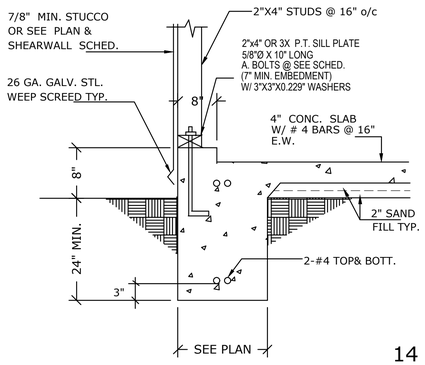

14

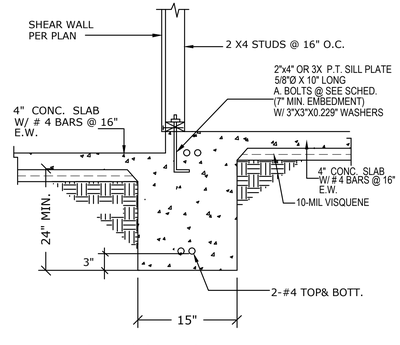

INTERIOR FOOTING

15

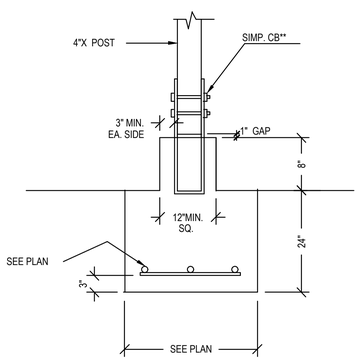

16

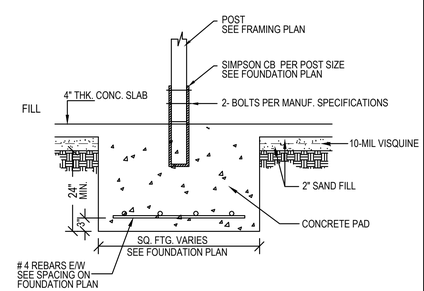

POST FOOTING

17

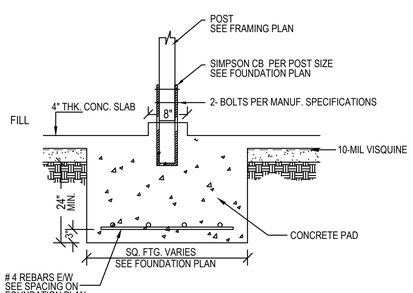

18

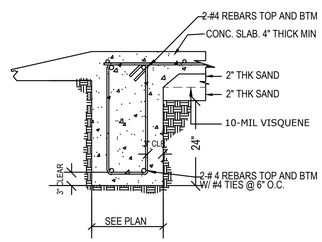

GRADE BEAM DETAIL

19

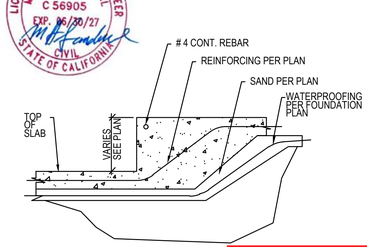

SLAB STEP DOWN

20

BUILDING AND SAFETY DIVISION
Department of Public Works
APPROVED
UNDER LOS ANGELES COUNTY CODE
TITLES 26, 30 AND 31
DMcombs
PUBLIC WORKS
04/08/2026 11:18:30 AM

This set of plans and specifications must be kept on the job site at all times and it is unlawful to make any changes, additions or alterations to same or to any portion thereof without the prior written permission of the Building Official. The stamping of this set of plans and specifications SHALL NOT, under any circumstances, be deemed to permit or to be an approval of any work or activity that violates any provisions of any County Ordinance or State Law

REVISIONS	BY
2/25/2026	C.L.

Plans drawn by:

G P. FOX DRAFTING INC.
RESIDENTIAL DRAFTING
8050 E. FLORENCE AVE, SUITE.27
DOWNEY, CA 90240
(562) 928-5467
email: gpfoxdesign@verizon.net

GENERAL NOTES

1. VERIFY MEASUREMENTS WITH CORRESPONDING CONSTRUCTED OR EXISTING CONDITIONS PRIOR TO PROCEEDING WITH THE WORK, AND NOTIFY THE DRAFTSMAN IMMEDIATELY OF SIGNIFICANT DISCREPANCIES.
2. FINISH ELEVATIONS REFERENCED ON THE DRAWINGS ARE DATUM ELEVATIONS ABOVE THE FINISH FLOOR ELEVATION. THE CONTRACTOR MUST COORDINATE DATUM-BASED ELEVATIONS SHOWN WITH SITE-SPECIFIC ELEVATIONS SHOWN ON CIVIL DRAWINGS.
3. WALL DIMENSIONS SHOWN ARE TO FACE OF WALL FINISH UNLESS SPECIFICALLY NOTED OTHERWISE.

Project:

PROPOSED NEW 2-STORY S.F.D. AND AN ADU

Sheet Title:

DETAILS

Project for:

SALVADOR POLINA

Project:
Address:

13828, 13828 1/2 CREWE ST WHITTIER , CA.90605

Checked	G.P.
Job no.	----
Drawn	J.P.M
Date	03/19/2024

SHEET: **SD2**

OF SHEETS

RR 25720 HOLDOWN	ANCHOR DIA.	FASTNERS	EDGE DIST.	EMBEDMENT
HDU2	5/8"	6-SDS 1/4"X2 1/2"	8"	12"
HDU4	5/8"	10-SDS 1/4"X2 1/2"	8"	12"
HDU5	5/8"	14-SDS 1/4"X2 1/2"	8"	12"
HDU8	7/8"	20-SDS 1/4"X2 1/2"	8"	12"
HDU11	1"	30-SDS 1/4"X2 1/2"	12"	24"

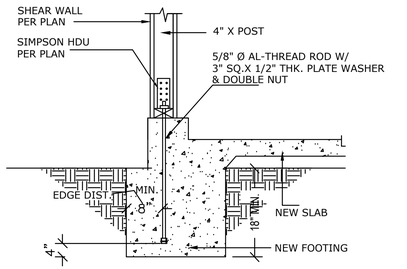

HOLDOWN @ NEW FOOTING 1

HOLDOWN	ANCHOR DIA.	FASTNERS	EDGE DIST.	EMBEDMENT
HDU2	5/8"	6-SDS 1/4"X2 1/2"	8"	12"
HDU4	5/8"	10-SDS 1/4"X2 1/2"	8"	12"
HDU5	5/8"	14-SDS 1/4"X2 1/2"	8"	12"
HDU8	7/8"	20-SDS 1/4"X2 1/2"	12"	15"

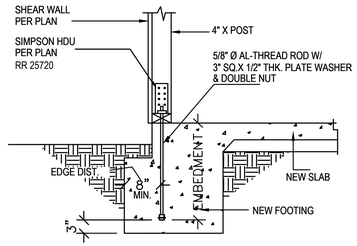

HOLDOWN @ NEW FOOTING 2

HOLDOWN	ANCHOR DIA.	FASTNERS	EDGE DIST.	EMBEDMENT
HDU2	5/8"	6-SDS 1/4"X2 1/2"	8"	12"
HDU4	5/8"	10-SDS 1/4"X2 1/2"	8"	12"
HDU5	5/8"	14-SDS 1/4"X2 1/2"	8"	12"
HDU8	7/8"	20-SDS 1/4"X2 1/2"	12"	15"

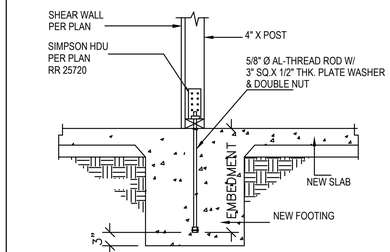

HOLDOWN @ NEW FOOTING 3

HOLDOWN	ANCHOR DIA.	FASTNERS	EDGE DIST.	EMBEDMENT
HDU2	5/8"	6-SDS 1/4"X2 1/2"	8"	12"
HDU4	5/8"	10-SDS 1/4"X2 1/2"	8"	12"
HDU5	5/8"	14-SDS 1/4"X2 1/2"	8"	12"
HDU8	7/8"	20-SDS 1/4"X2 1/2"	12"	15"

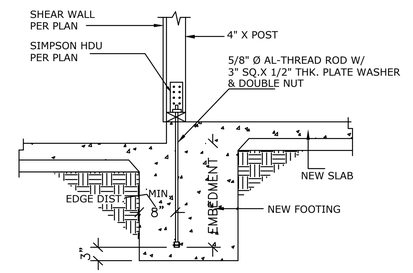

HOLDOWN @ NEW FOOTING 4

HOLDOWN	ANCHOR DIA.	FASTNERS	EDGE DIST.	EMBEDMENT
HDU2	5/8"	6-SDS 1/4"X2 1/2"	8"	12"
HDU4	5/8"	10-SDS 1/4"X2 1/2"	8"	12"
HDU5	5/8"	14-SDS 1/4"X2 1/2"	8"	12"
HDU8	7/8"	20-SDS 1/4"X2 1/2"	12"	15"

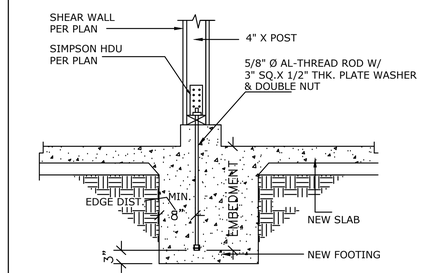

HOLDOWN @ NEW FOOTING 5

RR 25720 HOLDOWN	ANCHOR DIA.	FASTNERS	EDGE DIST.	EMBEDMENT
HDU2	5/8"	6-SDS 1/4"X2 1/2"	8"	12"
HDU4	5/8"	10-SDS 1/4"X2 1/2"	8"	12"
HDU5	5/8"	14-SDS 1/4"X2 1/2"	8"	12"
HDU8	7/8"	20-SDS 1/4"X2 1/2"	12"	15"
HDU11	1"	30-SDS 1/4"X2 1/2"	12"	24"
HDU14	1"	36-SDS 1/4"X2 1/2"		24"

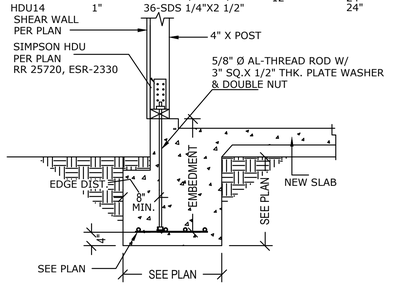

HOLDOWN @ PAD FOOTING 6

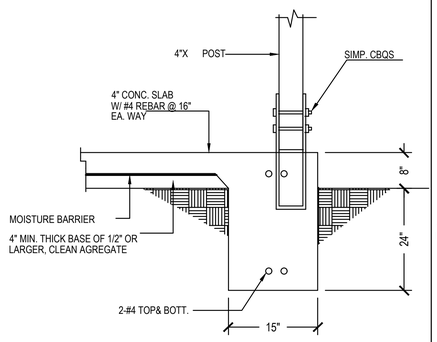

7

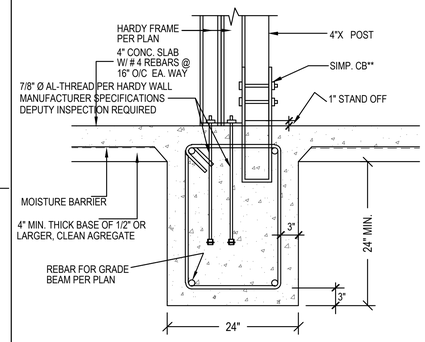

CB & HARDY FRAME 8

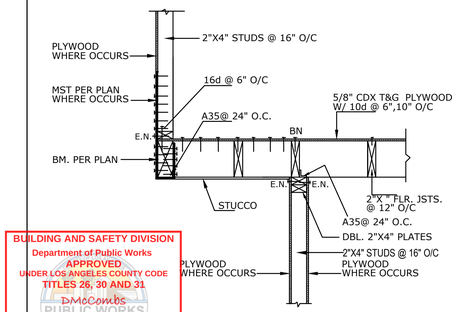

9

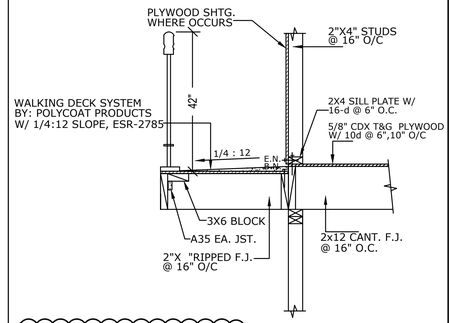

GUARD RAIL DETAIL 10

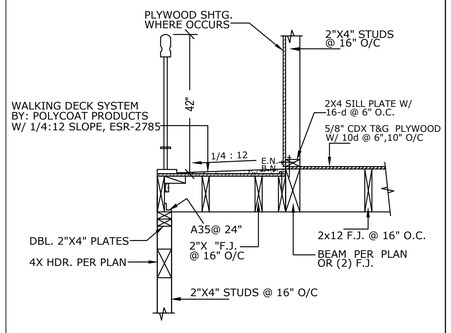

11

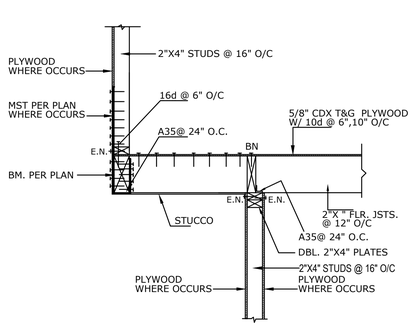

12

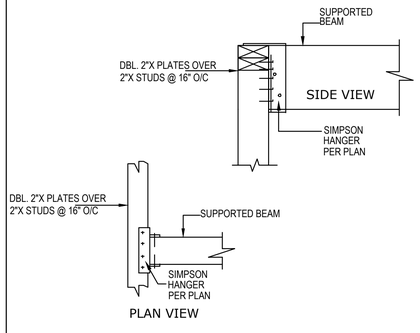

BEAM HANGER @ 2"X STUDS 13

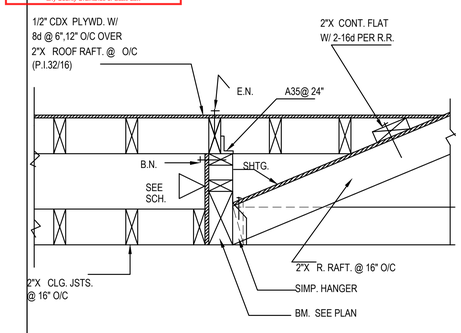

CALIFORNIA FRAME 14

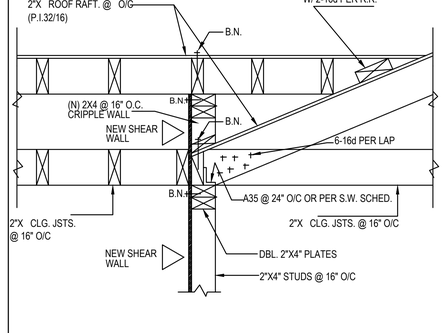

CALIFORNIA FRAME 15

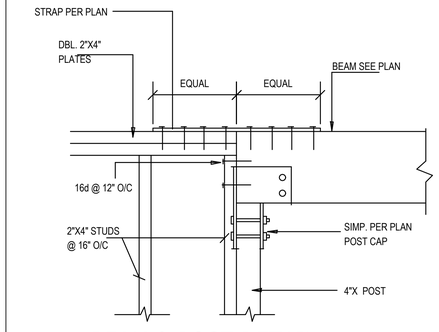

BEAM & POST DETAIL 16

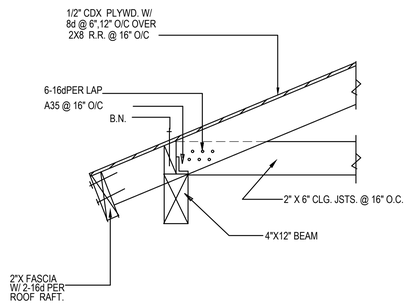

17

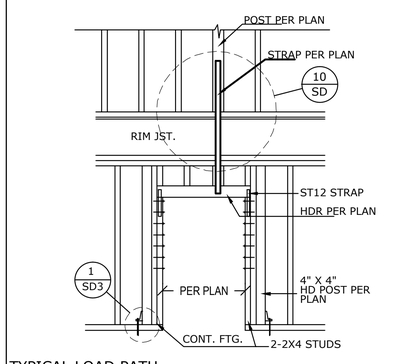

TYPICAL LOAD PATH
FLOOR TIES OVER HDR 18

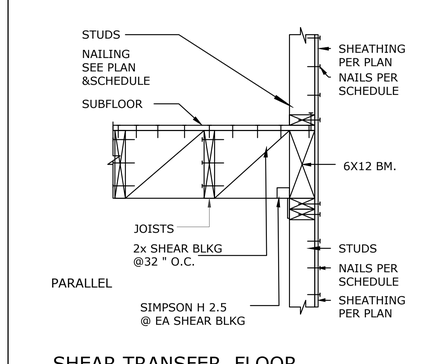

SHEAR TRANSFER FLOOR 19

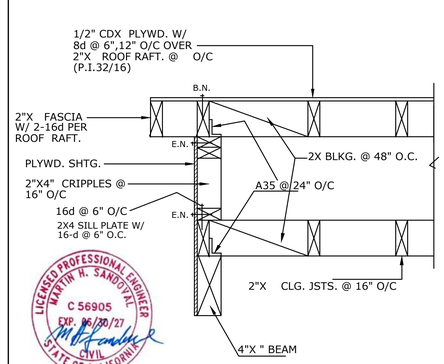

20

BUILDING AND SAFETY DIVISION
Department of Public Works
APPROVED
UNDER LOS ANGELES COUNTY CODE
TITLES 26, 30 AND 31
DMcoombs
PUBLIC WORKS
04/08/2026 11:18:30 AM
This set of plans and specifications must be kept at the job site at all times and it is unlawful to make any changes, modifications or alterations to these plans or specifications. Neither the preparation nor approval of these plans or specifications nor the issuance of any permit pursuant thereto shall be construed as a warranting of this set of plans and specifications SHALL NOT, under any circumstances, be deemed to permit or to be an approval of any work or activity that violates any provisions of any County Ordinance or State Law.

REVISIONS	BY
4/28/2021 BUILDING AND SAFETY DIVISION	C.L.
2/25/2026	C.L.

Plans drawn by:
G P. FOX DRAFTING INC.
RESIDENTIAL DRAFTING
8050 E. FLORENCE AVE, SUITE.27
DOWNEY, CA 90240
(562) 928-5467
email: gpfoxdesign@verizon.net

GENERAL NOTES

1. VERIFY MEASUREMENTS WITH CORRESPONDING CONSTRUCTED OR EXISTING CONDITIONS PRIOR TO PROCEEDING WITH THE WORK, AND NOTIFY THE DRAFTSMAN IMMEDIATELY OF SIGNIFICANT DISCREPANCIES.
2. FINISH ELEVATIONS REFERENCED ON THE DRAWINGS ARE DATUM ELEVATIONS ABOVE THE FINISH FLOOR ELEVATION. THE CONTRACTOR MUST COORDINATE DATUM-BASED ELEVATIONS SHOWN WITH SITE-SPECIFIC ELEVATIONS SHOWN ON CIVIL DRAWINGS.
3. WALL DIMENSIONS SHOWN ARE TO FACE OF WALL FINISH UNLESS SPECIFICALLY NOTED OTHERWISE.

Project:
PROPOSED NEW 2-STORY S.F.D. AND AN ADU

Sheet Title:
DETAILS

Project for:
SALVADOR POLINA

Project:
Address:
13828, 13828 1/2 CREWE ST WHITTIER , CA.90605

Checked	G.P.
Job no.	----
Drawn	J.P.M
Date	03/19/2024

SHEET: **SD3**

OF SHEETS

LICENSED PROFESSIONAL ENGINEER MARVIN W. SANDOVAL C 56905 EXP. 06/30/27 CIVIL STATE OF CALIFORNIA

BACK TO BACK REINFORCED ANCHORAGE (BB-RA)

					BB-RA				

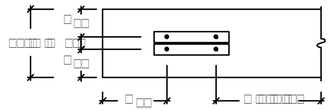

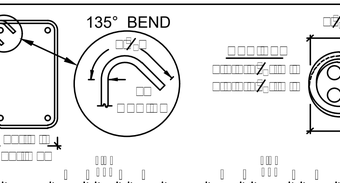

BB-RA SHEAR TIES & STIRRUPS

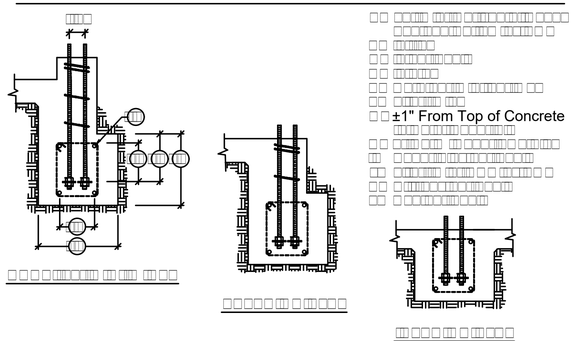

BB-RA SECTIONS & ELEVATIONS

REINFORCED ANCHORAGE (RA)

					RA				

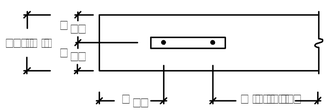

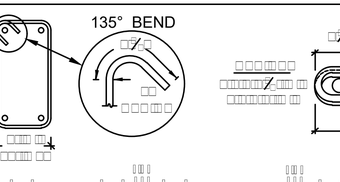

RA SHEAR TIES & STIRRUPS

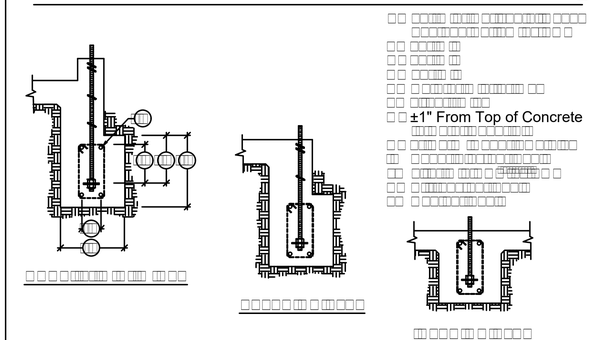

RA SECTIONS & ELEVATIONS

UNREINFORCED ANCHORAGE (UA)

					UA		

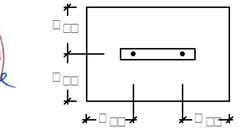

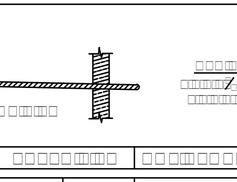

UA SHEAR TIES

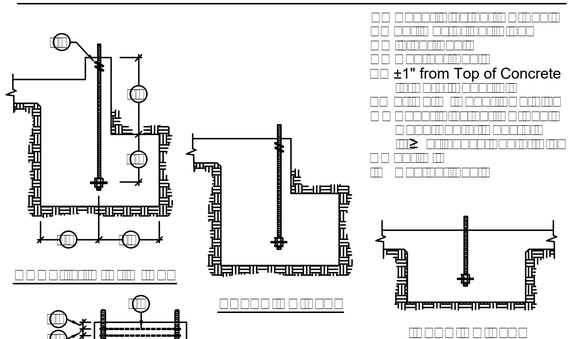

UA SECTIONS & ELEVATIONS

TABLE NOTES

spacing. See "Stirrup Layout" diagrams and "Key" for layout

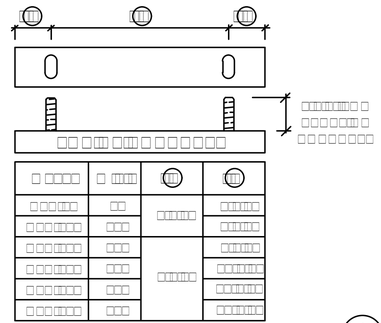

HFX ANCHOR CENTERLINES

IMPORTANT!

IMPORTANT NOTES

LICENSED PROFESSIONAL ENGINEER MARTIN H. SANDOVAL C 56905 EXP. 06/30/27 CIVIL STATE OF CALIFORNIA

BUILDING AND SAFETY DIVISION
Department of Public Works
APPROVED
UNDER LOS ANGELES COUNTY CODE
TITLES 26, 30 AND 31
DMcCombs
PUBLIC WORKS
04/08/2026 11:18:30 AM
This set of plans and specifications must be kept at the job site at all times and it is unlawful to make any changes, without the prior written authorization of the Building Official. The stamping of this set of plans and specifications SHALL NOT, under any circumstances, be deemed to permit or to be an approval of any work or activity that violates any provisions of any County Ordinance or State Law

HARDY FRAME

SECTION A

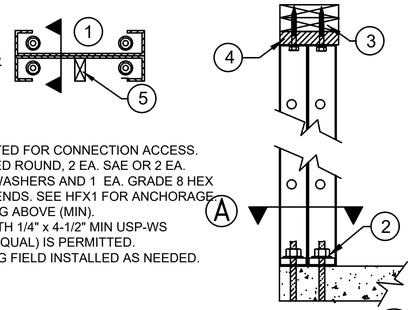

1. CAVITY ORIENTED FOR CONNECTION ACCESS.
2. 1 EA. HARDENED ROUND, 2 EA. SAE OR 2 EA. ROUND-FLAT WASHERS AND 1 EA. GRADE 8 HEX NUT AT BOTH ENDS. SEE HFX1 FOR ANCHORAGE.
3. 8 INCH FRAMING ABOVE (MIN).
4. A 2x FILLER WITH 1/4" x 4-1/2" MIN USP-WS SCREWS (OR EQUAL) IS PERMITTED.
5. WOOD BACKING FIELD INSTALLED AS NEEDED.

BACK TO BACK INSTALLATION (11)

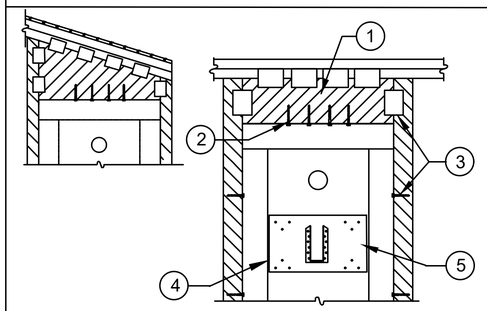

1. 4x WOOD FILLER WITH USP MP4-F CONNECTORS (OR EQUAL) BY BUILDING DESIGN PROFESSIONAL.
2. 1/4" x 3" (MIN) USP "WS-SERIES" SCREWS (OR EQUAL). QUANTITY PER TABLES
3. ADJACENT FRAMING WITH 1/4" DIAMETER SCREWS IS INSTALLED AT THE EDGES WHEN INSTALLING A 4x FILLER ABOVE OR WHEN SPECIFIED BY DESIGN PROFESSIONAL.
4. OPTIONAL LEDGER PRE-DRILL 3/16" DIA. HOLES, EVENLY SPACED IN FACE OF PANEL AND INSTALL 1/4" DIA. WOOD SCREWS INTO 2x (MIN.) WOOD LEDGER LOCATED IN PANEL CAVITY.
5. CONNECTOR AND ATTACHMENT BY BUILDING DESIGN PROFESSIONAL.

TOP CONNECTION W/ 4x FILLER (10)

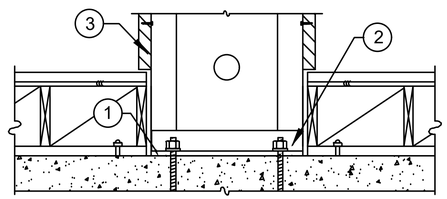

1. 15# FELT OR EQUIVALENT MOISTURE BARRIER RECOMMENDED BETWEEN PANEL BASE AND CONCRETE.
2. 1 EA. HARDENED ROUND, 2 EA. SAE OR 2 EA. ROUND-FLAT WASHERS AND 1 EA. GRADE 8 HEX NUT AT BOTH ENDS. SEE HFX1 FOR ANCHORAGE.
3. ADACCENT FRAMING WITH 1/4" DIAMETER SCREWS IS INSTALLED AT THE EDGES WHEN INSTALLING A 4x FILLER ABOVE OR WHEN SPECIFIED BY DESIGN PROFESSIONAL.

RAISED FLOOR HEAD-OUT (9)

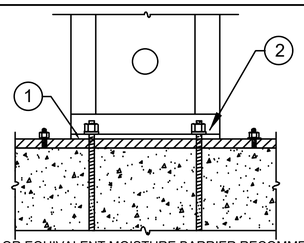

1. 15# FELT OR EQUIVALENT MOISTURE BARRIER RECOMMENDED BETWEEN PANEL BASE AND CONCRETE.
2. 1 EA. HARDENED ROUND, 2 EA. SAE OR 2 EA. ROUND-FLAT WASHERS AND 1 EA. GRADE 8 HEX NUT. SEE HFX1 FOR ANCHORAGE.

INSTALLATION ON 2x PLATE (8)

NOTES:

A) OUT OF PLANE FORCES TO BE RESISTED BY OTHER FRAMING MEMBERS PER THE BUILDING DESIGN PROFESSIONAL.

B) BALLOON WALL APPLICATIONS REQUIRE HIGH STRENGTH ANCHORAGE. SEE FOUNDATION PLAN AND ANCHORAGE TABLES ON SHEET HFX-1

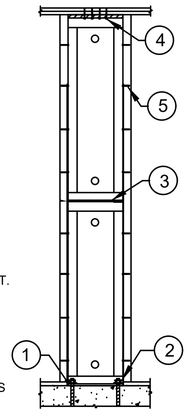

1. 15# FELT OR EQUIVALENT MOISTURE BARRIER RECOMMENDED BETWEEN PANEL BASE AND CONCRETE.
2. 1 EA. HARDENED ROUND, 2 EA. SAE OR 2 EA. ROUND-FLAT WASHERS AND 1 EA. GRADE 8 HEX NUT. SEE HFX1 FOR ANCHORAGE.
3. WELDED CONNECTION BY HARDY FRAMES, INC. (NO FIELD CONNECTION REQUIRED).
4. A 2x FILLER WITH 1/4" x 4-1/2" MIN USP-WS SCREWS (OR EQUAL) IS PERMITTED.
5. WHEN REQUIRED BY THE BUILDING DESIGN PROFESSIONAL ATTACH ADJACENT WOOD MEMBERS TO PANEL WITH 1/4" USP-WS SCREWS (OR EQUAL) THROUGH THE PANEL EDGE INTO THE WOOD MEMBER.

BALLOON WALL INSTALLATION (7)

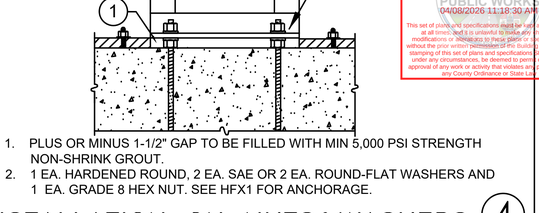

1. 1/4" x 3" (MIN) USP "WS-SERIES" SCREWS (OR EQUAL). QUANTITY PER TABLES
2. 1/4" x 4-1/2" (MIN) USP "WS-SERIES" SCREWS (OR EQUAL). QUANTITY PER TABLES
3. 2x WOOD FILLER.

TOP PLATE CONNECTIONS (6)

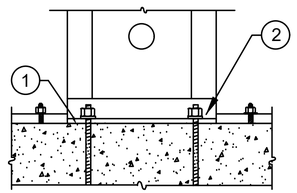

1. 15# FELT OR EQUIVALENT MOISTURE BARRIER RECOMMENDED BETWEEN PANEL BASE AND CONCRETE.
2. 1 EA. HARDENED ROUND, 2 EA. SAE OR 2 EA. ROUND-FLAT WASHERS AND 1 EA. GRADE 8 HEX NUT AT BOTH ENDS. SEE HFX1 FOR ANCHORAGE.

INSTALLATION ON FOUNDATION (5)

1. PLUS OR MINUS 1-1/2" GAP TO BE FILLED WITH MIN 5,000 PSI STRENGTH NON-SHRINK GROUT.
2. 1 EA. HARDENED ROUND, 2 EA. SAE OR 2 EA. ROUND-FLAT WASHERS AND 1 EA. GRADE 8 HEX NUT. SEE HFX1 FOR ANCHORAGE.

INSTALLATION ON NUTS&WASHERS (4)

BUILDING AND SAFETY DIVISION
Department of Public Works
APPROVED
UNDER LOS ANGELES COUNTY CODE
TITLES 26, 30 AND 31
DMcCombs
PUBLIC WORKS
04/06/2026 11:18:30 AM
This set of plans and specifications must be kept at the job site at all times and it is unlawful to make any changes, modifications or deviations to these plans or specifications without the prior written permission of the Building Official. The stamping of this set of plans and specifications SHALL NOT, under any circumstances, be deemed to permit or to be an approval of any work or activity that violates any provisions of any County Ordinance or State Law.

NOTES:

ATTACHMENTS MAY BE MADE AT SCREW HOLES PROVIDED OR WITH SELF TAPPING SCREWS (#12 AT EDGES, #10 AT FACE).

LICENSED PROFESSIONAL ENGINEER
MARTIN H. SANDOVAL
C 56905
EXP. 06/30/27
CIVIL
STATE OF CALIFORNIA

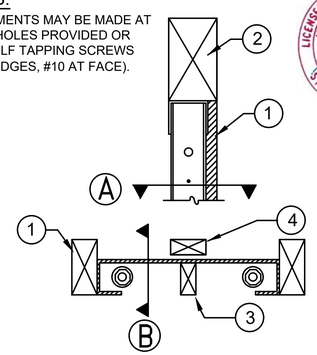

SECTION B

SECTION A

1. TRIMMERS PROVIDE FULL BEARING FOR HEADER ABOVE, DESIGN AND CONNECTIONS BY OTHERS.
2. 6x HEADER.
3. WOOD MEMBERS MAY BE INSERTED VERTICALLY OR HORIZONALLY IN CAVITY FOR BACKING AS NEEDED.

6x HEADER ABOVE-SECTION (3)

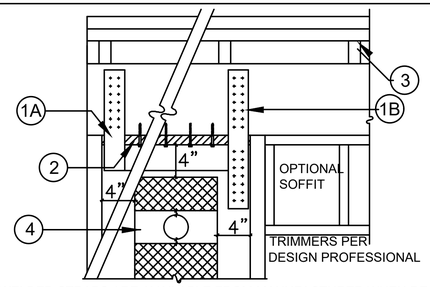

1A. WELDED STRAPS ARE AVAILABLE FROM MANUFACTURER WHEN REQUIRED BY THE DESIGN PROFESSIONAL.
1B. WHEN STRAPS ARE FIELD INSTALLED THE DESIGN AND CONNECTION IS BY THE DESIGN PROFESSIONAL. CONNECTION TO PANEL WITH SELF TAPPING SCREWS IS PERMITTED.
2. A 2x WOOD FILLER WITH 1/4"x4-1/2" (MIN.) USP "WS" SERIES SCREWS OR EQUAL IS PERMITTED.
3. WHEN CRIPPLE STUDS OCCUR, SHEAR TRANSFER DESIGN TO BE PER THE DESIGN PROFESSIONAL.
4A. THERE IS NO "INSIDE" OR "OUTSIDE" FACE OF PANEL. TO PREVENT THE NEED FOR ADDITIONAL HOLES ORIENT THE PANEL CAVITY TOWARD THE FIXTURE BEING INSTALLED.
4B. A 1" DIA. HOLE MAY BE ADDED IN THE PANEL FACE WHEN IT IS LOCATED IN THE UPPER HALF OF THE PANEL HEIGHT AND IS 4" MIN. FROM ANY EDGE. FOR PANELS MORE THAN 12" WIDE, ADDITIONAL HOLES MUST ALSO BE 1" MINIMUM ABOVE AND BELOW THE 3" DIA. HOLE PROVIDED.
4C. FOR HOLES LARGER THAN 1" DIA. OR TO ADD MORE THAN ONE HOLE CONTACT HARDY FRAMES, INC.

TOP CONNECTION TO HEADER (2)

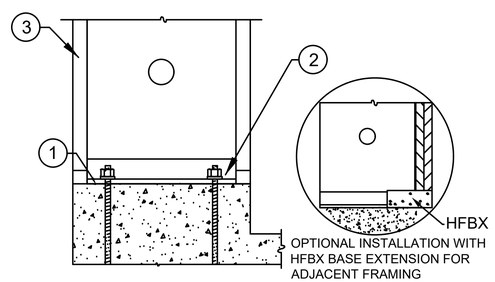

OPTIONAL INSTALLATION WITH HFBX BASE EXTENSION FOR ADJACENT FRAMING

1. 15# FELT OR EQUIVALENT MOISTURE BARRIER RECOMMENDED BETWEEN PANEL BASE AND CONCRETE.
2. 1 EA. HARDENED ROUND, 2 EA. SAE OR 2 EA. ROUND-FLAT WASHERS AND 1 EA. GRADE 8 HEX NUT. SEE HFX1 FOR ANCHORAGE.
3. ADJACENT FRAMING OPTIONAL U.N.O. BY BUILDING DESIGN PROFESSIONAL.

INSTALLATION ON CURB (1)

HFX-SERIES 78 IN. THRU 13 FOOT

Model Number	Net Height (in)	Depth (in)	Hold Down Diameter[1] (in)	Top Screw Qty[2] (ea)	Screw Qty Available at Edges (ea)[3]
HFX-12,15,18,21 & 24x78	78	3-1/2	1-1/8	9" Width = 5 12" Width = 6 15" Width = 8	4
HFX-9x79.5	79-1/2				
HFX-12,15,18,21 & 24x8	92-1/4				
HFX-9x8	93-3/4				
HFX-12,15,18,21 & 24x9	104-1/4				
HFX-12,15,18,21 & 24x10	116-1/4			18" Width = 10 21" Width = 12	5
HFX-15,18,21 & 24x11	128-1/4				
HFX-15,18,21 & 24x12	140-1/4			24" Width = 14	6
HFX-15,18,21 & 24x13	152-1/4				

BALLOON PANELS 14 FEET THRU 20 FEET

Model Number	Net Height (in)	Depth (in)	Hold Down Diameter[1] (in)	Top Screw Qty[2] (ea)	Screw Qty Available at Edges (ea)[3]
HFX-15,18,21 & 24x14	164-1/4	3-1/2	1-1/8	15" Width = 8 18" Width = 10	6
HFX-15,18,21 & 24x15	176-1/4				
HFX-15,18,21 & 24x16	188-1/4				
HFX-15,18,21 & 24x17	200-1/4			21" Width = 12	7
HFX-15,18,21 & 24x18	212-1/4				
HFX-15,18,21 & 24x19	224-1/4			24" Width = 14	8
HFX-15,18,21 & 24x20	236-1/4				

1) Hold down bolts connect to the Panel base with (1 ea) Hardened Round, (2 ea) Round-Flat or (2 ea) SAE Washers below (1 ea) Grade 8 Hex Nut on each rod or as specified by the Building Design Professional.
2) 1/4" diameter USP-WS Series screws (or equal). Length is 3" (minimum) when attached directly to the collector and 4-1/2" (minimum) when installing a 2x filler above the Panel.
3) Adjacent framing with 1/4" diameter screws is required at the edges when installing a 4X filler above or when specified by the Design Professional.

(A)

INSTALLATION INSTRUCTIONS

A) When installing directly on concrete, place Panel over bolts and connect with (1 ea) Hardened Round, (2 ea) Round-Flat or (2 ea) SAE Washers below (1 ea) Grade 8 or 2H Heavy Hex Nut. Secure with a deep socket (recommended) until "Snug Tight".
B) If bottom connection is not detailed on plans, confirm with Design Professional before installing on Nuts & Washers or on a Mudsill.
C) Use 1/4"x4-1/2" USP-WS Series screws (or equal) at top connections with a 2x filler. If the top of Panel is in direct contact with the collector above (top plates, header, beam, etc.) use1/4 x 3" (minimum)
D) For installations with a 4x filler above 1/4" diameter screws are required at the Panel edges to brace for the out-of-plane hinge or when they are specified by the Design Professional.

(B)

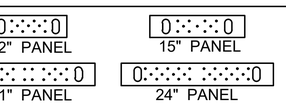

(C)

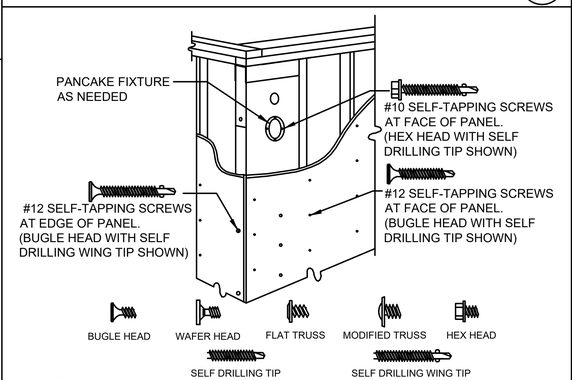

NOTES:
1) SURFACE FINISHES, CONNECTORS AND FIXTURES ARE ATTACHED TO THE PANEL FACE WITH # 10 SELF-TAPPING SCREWS SPACED NO LESS THAN 2-1/4" OC.
2) ATTACHMENTS TO THE PANEL EDGES ARE MADE WITH # 12 SELF-TAPPING SCREWS.
3) STRUCTURAL CONNECTIONS ARE TO BE DESIGNED BY THE DESIGN PROFESSIONAL.
4) STRUCTURAL HARDWARE USED TO TRANSFER LOADS SHOULD NOT EXCEED 12 GAGE.

(D)

REVISIONS	DATE

FRAMING DETAILS - HFX PANELS

THIS DETAIL SHEET IS NOT PROPRIETARY AND IS NOT REQUIRED FOR PLAN SUBMITTAL WITH *HARDY FRAME* PRODUCTS

HARDY FRAME
5440 ALHAMA DRIVE, VALLEJO, CA 94591
PHONE: (800) 421-2584 FAX: (707) 748-3275
WWW.HARDYFRAME.COM

DATE: 1-1-2020

HFX2

GENERAL INFORMATION					
01	Project Name	2-STORY RESIDENCE			
02	Run Title	Title 24 Analysis			
03	Project Location	13828 CREWE ST			
04	City	WHITTIER	05	Standards Version	2022
06	Zip code	90605	07	Software Version	EnergyPro 9.1
08	Climate Zone	8	09	Front Orientation (deg/ Cardinal)	0
10	Building Type	Single family	11	Number of Dwelling Units	1
12	Project Scope	Newly Constructed	13	Number of Bedrooms	5
14	Addition Cond. Floor Area (ft²)	0	15	Number of Stories	2
16	Existing Cond. Floor Area (ft²)	n/a	17	Fenestration Average U-factor	0.28
18	Total Cond. Floor Area (ft²)	2331	19	Glazing Percentage (%)	13.30%
20	ADU Bedroom (Y/N)	n/a			

COMPLIANCE RESULTS	
01	Building Complies with Computer Performance
02	This building incorporates features that require field testing and/or verification by a certified HERS rater under the supervision of a CEC-approved HERS provider.
03	This building incorporates one or more Special Features shown below

NOTICE: This document has been generated by California Home Energy Efficiency Rating Services (CHEERS) using information uploaded by third parties not affiliated with or related to CHEERS. Therefore, CHEERS is not responsible for, and cannot guarantee, the accuracy or completeness of the information contained in this document.

ENERGY DESIGN RATINGS						
	Energy Design Ratings			Compliance Margins		
	Source Energy (EDR1)	Efficiency[1] EDR (EDR2efficiency)	Total[2] EDR (EDR2total)	Source Energy (EDR1)	Efficiency[1] EDR (EDR2efficiency)	Total[2] EDR (EDR2total)
Standard Design	38.8	40.9	27.8			
Proposed Design	38.5	37.3	24.3	0.3	3.6	3.5
RESULT[3]: PASS						

[1]Efficiency EDR includes improvements like a better building envelope and more efficient equipment
[2]Total EDR includes efficiency and demand response measures such as photovoltaic (PV) system and batteries
[3]Building complies when source energy, efficiency and total compliance margins are greater than or equal to zero and unmet load hour limits are not exceeded

- Standard Design PV Capacity: 3.29 kWdc
- PV System resized to 3.29 kWdc (a factor of 3.290) to achieve 'Standard Design PV' PV scaling

ENERGY USE SUMMARY						
Energy Use	Standard Design Source Energy (EDR1) (kBtu/ft²-yr)	Standard Design TDV Energy (EDR2) (kTDV/ft²-yr)	Proposed Design Source Energy (EDR1) (kBtu/ft²-yr)	Proposed Design TDV Energy (EDR2) (kTDV/ft²-yr)	Compliance Margin (EDR1)	Compliance Margin (EDR2)
Space Heating	1.7	7.59	1.96	8.76	-0.26	-1.17
Space Cooling	0.67	17.97	0.65	20.02	0.02	-2.05
IAQ Ventilation	0.38	3.96	0.38	3.96	0	0
Water Heating	1.28	13.55	1.1	13.35	-1.82	0.2
Self Utilization/Flexibility Credit				-6.89		6.89
Efficiency Compliance Total	4.03	43.07	6.09	39.2	-2.06	3.87
Photovoltaics	-1.55	-46.46	-1.38	-41.76		
Battery			-2.3	-7.71		
Flexibility						
Indoor Lighting	0.68	6.4	0.68	6.4		
Appl. & Cooking	2.85	18.34	2.85	18.36		
Plug Loads	3.15	32.06	3.15	32.06		
Outdoor Lighting	0.19	1.62	0.19	1.62		
TOTAL COMPLIANCE	9.35	55.03	9.28	48.17		

ENERGY USE INTENSITY				
	Standard Design (kBtu/ft² - yr)	Proposed Design (kBtu/ft² - yr)	Compliance Margin (kBtu/ft² - yr)	Margin Percentage
Gross EUI[1]	13.73	16.33	-2.6	-18.94
Net EUI[2]	5.86	9.42	-3.56	-60.75

Notes
1. Gross EUI is Energy Use Total (not including PV) / Total Building Area.
2. Net EUI is Energy Use Total (including PV) / Total Building Area.

REQUIRED PV SYSTEMS											
01	02	03	04	05	06	07	08	09	10	11	12
DC System Size (kWdc)	Exception	Module Type	Array Type	Power Electronics	CFI	Azimuth (deg)	Tilt Input	Array Angle (deg)	Tilt: (x in 12)	Inverter Eff. (%)	Annual Solar Access (%)
3.29	NA	Standard (14-17%)	Fixed	none	false	90	Degrees	22	4.85	96	100

BATTERY SYSTEMS						
01	02	03	04	05	06	07
Control	Capacity (kWh)	Charging		Discharging		Round Trip Efficiency
		Charging Efficiency	Charging Rate (kW)	Discharging Efficiency	Discharging Rate (kW)	
Basic	12	0.95	n/a	0.95	n/a	0.9

REQUIRED SPECIAL FEATURES
The following are features that must be installed as condition for meeting the modeled energy performance for this computer analysis.
• Battery System: 12 kWh (Self Utilization Credit taken)
• Cool roof

HERS FEATURE SUMMARY
The following is a summary of the features that must be field-verified by a certified HERS Rater as a condition for meeting the modeled energy performance for this computer analysis. Additional detail is provided in the building tables below. Registered CF2Rs and CF3Rs are required to be completed in the HERS Registry
• Quality insulation installation (QII)
• Indoor air quality ventilation
• Kitchen range hood
• Minimum Airflow
• Verified EER/EER2
• Verified SEER/SEER2
• Verified Refrigerant Charge
• Fan Efficacy Watts/CFM
• Duct leakage testing
• Compact distribution system expanded credit
• Drain water heat recovery system

BUILDING - FEATURES INFORMATION						
01	02	03	04	05	06	07
Project Name	Conditioned Floor Area (ft²)	Number of Dwelling Units	Number of Bedrooms	Number of Zones	Number of Ventilation Cooling Systems	Number of Water Heating Systems
2-STORY RESIDENCE	2331	1	5	2	0	1

ZONE INFORMATION						
01	02	03	04	05	06	07
Zone Name	Zone Type	HVAC System Name	Zone Floor Area (ft²)	Avg. Ceiling Height	Water Heating System 1	Status
1st Floor Zone	Conditioned	Res HVAC1	1014	8	DHW Sys 1	New
2nd Floor Zone	Conditioned	Res HVAC1	1317	8	DHW Sys 1	New

OPAQUE SURFACES							
01	02	03	04	05	06	07	08
Name	Zone	Construction	Azimuth	Orientation	Gross Area (ft²)	Window and Door Area (ft2)	Tilt (deg)
Front Wall	1st Floor Zone	R-15 Wall	0	Front	270	53	90
Left Wall	1st Floor Zone	R-15 Wall	90	Left	180	40	90

OPAQUE SURFACES							
01	02	03	04	05	06	07	08
Name	Zone	Construction	Azimuth	Orientation	Gross Area (ft²)	Window and Door Area (ft2)	Tilt (deg)
Back Wall	1st Floor Zone	R-15 Wall	180	Back	270	24	90
Right Wall	1st Floor Zone	R-15 Wall	270	Right	180	40	90
Front Wall 2	2nd Floor Zone	R-15 Wall	0	Front	270	81	90
Left Wall 2	2nd Floor Zone	R-15 Wall	90	Left	180	38	90
BackWall	2nd Floor Zone	R-15 Wall	180	Back	270	16	90
Right Wall 2	2nd Floor Zone	R-15 Wall	270	Right	180	38	90
R-38 Roof	1st Floor Zone	R-38 HP Attic	n/a	n/a	1014	n/a	n/a
R-38 Roof 2	2nd Floor Zone	R-38 HP Attic	n/a	n/a	1317	n/a	n/a
Floor Below	2nd Floor Zone	R-19 Floor No Crawlspace	n/a	n/a	1317	n/a	n/a

ATTIC							
01	02	03	04	05	06	07	08
Name	Construction	Type	Roof Rise (x in 12)	Roof Reflectance	Roof Emittance	Radiant Barrier	Cool Roof
Attic 1st Floor Zone	Attic Roof1st Floor Zone	Ventilated	4	0.35	0.85	Yes	Yes
Attic 2nd Floor Zone	Attic Roof2nd Floor Zone	Ventilated	4	0.35	0.85	Yes	Yes

FENESTRATION / GLAZING													
01	02	03	04	05	06	07	08	09	10	11	12	13	14
Name	Type	Surface	Orientation	Azimuth	Width (ft)	Height (ft)	Mult.	Area (ft²)	U-factor	U-factor Source	SHGC	SHGC Source	Exterior Shading
Front Windows	Window	Front Wall	Front	0			1	32	0.28	NFRC	0.2	NFRC	Bug Screen
Left Windows	Window	Left Wall	Left	90			1	40	0.28	NFRC	0.2	NFRC	Bug Screen
Window	Window	Back Wall	Back	180			1	24	0.28	NFRC	0.2	NFRC	Bug Screen

FENESTRATION / GLAZING													
01	02	03	04	05	06	07	08	09	10	11	12	13	14
Name	Type	Surface	Orientation	Azimuth	Width (ft)	Height (ft)	Mult.	Area (ft²)	U-factor	U-factor Source	SHGC	SHGC Source	Exterior Shading
Right Windows	Window	Right Wall	Right	270			1	40	0.28	NFRC	0.2	NFRC	Bug Screen
Front Windows 2	Window	Front Wall 2	Front	0			1	81	0.28	NFRC	0.2	NFRC	Bug Screen
Left Windows 2	Window	Left Wall 2	Left	90			1	38	0.28	NFRC	0.2	NFRC	Bug Screen
Window 2	Window	BackWall	Back	180			1	16	0.28	NFRC	0.2	NFRC	Bug Screen
Right Windows 2	Window	Right Wall 2	Right	270			1	38	0.28	NFRC	0.2	NFRC	Bug Screen

OPAQUE DOORS				
01	02	03	04	
Name	Side of Building	Area (ft²)	U-factor	
Entry Door	Front Wall	21	0.2	

SLAB FLOORS							
01	02	03	04	05	06	07	08
Name	Zone	Area (ft²)	Perimeter (ft)	Edge Insul. R-value and Depth	Edge Insul. R-value and Depth	Carpeted Fraction	Heated
Slab-on-Grade	1st Floor Zone	1014	900	none	0	80%	No

OPAQUE SURFACE CONSTRUCTIONS							
01	02	03	04	05	06	07	08
Construction Name	Surface Type	Construction Type	Framing	Total Cavity R-value	Interior / Exterior Continuous R-value	U-factor	Assembly Layers
R-15 Wall	Exterior Walls	Wood Framed Wall	2x4 @ 16 in. O. C.	R-15	15 / None	0.036	Inside Finish: Gypsum Board Sheathing / Insulation: R-15 Sheathing Cavity / Frame: R-15 / 2x4 Exterior Finish: 3 Coat Stucco
Attic Roof1st Floor Zone	Attic Roofs	Wood Framed Ceiling	2x6 @ 24 in. O. C.	R-0	None / 0	0.64	Roofing: Light Roof (Asphalt Shingle) Roof Deck: Wood Siding/sheathing/decking Cavity / Frame: no insul. / 2x6
Attic Roof2nd Floor Zone	Attic Roofs	Wood Framed Ceiling	2x6 @ 24 in. O. C.	R-0	None / 0	0.64	Roofing: Light Roof (Asphalt Shingle) Roof Deck: Wood Siding/sheathing/decking Cavity / Frame: no insul. / 2x6
R-38 HP Attic	Ceilings (below attic)	Wood Framed Ceiling	2x8 @ 16 in. O. C.	R-38	None / None	0.026	Over Ceiling Joists: R-23.7 insul. Cavity / Frame: R-14.3 / 2x6 Inside Finish: Gypsum Board
R-19 Floor No Crawlspace	Exterior Floors	Wood Framed Floor	2x10 @ 16 in. O. C.	R-19	None / None	0.047	Floor Surface: Carpeted Floor Deck: Wood Siding/sheathing/decking Cavity / Frame: R-19 / 2x10

BUILDING ENVELOPE - HERS VERIFICATION				
01	02	03	04	05
Quality Insulation Installation (QII)	High R-value Spray Foam Insulation	Building Envelope Air Leakage	CFM50	CFM50
Required	Not Required	N/A	n/a	n/a

WATER HEATING SYSTEMS									
01	02	03	04	05	06	07	08	09	
Name	System Type	Distribution Type	Water Heater Name	Number of Units	Solar Heating System	Compact Distribution	HERS Verification	Water Heater Name (#)	
DHW Sys 1	Domestic Hot Water (DHW)	Standard	DHW Heater 1	1	n/a	Expanded	DHW Sys 1-hers-dhw	DHW Heater 1 (1)	

WATER HEATERS												
01	02	03	04	05	06	07	08	09	10	11	12	13
Name	Heating Element Type	Tank Type	# of Units	Tank Vol. (gal)	Heating Efficiency Type	Efficiency	Rated Input Type	Input Rating or Pilot	Tank Insulation R-value (Int/Ext)	Standby Loss or Recovery Eff	1st Hr. Rating or Flow Rate	Tank Location
DHW Heater 1	Gas	Consumer Instantaneous	1	0	UEF	0.97	Btu/hr	200000	0	n/a		

WATER HEATING - COMPACT DISTRIBUTION						
01	02	03	04	05	06	07
Dwelling Unit type	Water Heating System Name	Master Bath distance of furthest fixture to Water Heater (ft)	Kitchen distance of furthest fixture to Water Heater (ft)	Furthest Third furthest fixture to Water Heater (ft)	Compactness Factor	HERS Verification
Dwelling	DHW Sys 1	n/a	n/a	n/a	0.6	Expanded Credit

WATER HEATING - DRAIN WATER HEAT RECOVERY					
01	02	03	04	05	06
Dwelling Unit type	DHW System and DWHR Names	Installation Configuration	Shower Drains	Shower Drain Water Heat Recovery Efficiency (%)	HERS Verification
Dwelling	DHW Sys 1 - 1 - DWHR-1	Equal Flow	2	43	Required

WATER HEATING - HERS VERIFICATION						
01	02	03	04	05	06	07
Name	Pipe Insulation	Parallel Piping	Compact Distribution	Compact Distribution Type	Recirculation Control	Shower Drain Water Heat Recovery
DHW Sys 1 - 1/1	Not Required	Not Required	Required	Expanded	Not Required	Required

SPACE CONDITIONING SYSTEMS								
01	02	03	04	05	06	07	08	09
Name	System Type	Heating Unit Name	Heating Equipment Count	Cooling Unit Name	Cooling Equipment Count	Fan Name	Distribution Name	Required Thermostat Type
Res HVAC1	Heating and cooling system other	Heating Component 1	1	Cooling Component 1	1	HVAC Fan 1	Air Distribution System 1	Setback

HVAC - HEATING UNIT TYPES			
01	02	03	04
Name	System Type	Number of Units	Heating Efficiency
Heating Component 1	Central gas furnace	1	AFUE-96

HVAC - COOLING UNIT TYPES								
01	02	03	04	05	06	07	08	09
Name	System Type	Number of Units	Efficiency Metric	Efficiency EER/EER2/CEER	Efficiency SEER/SEER2	Zonally Controlled	Multi-speed Compressor	HERS Verification
Cooling Component 1	Central split AC	1	EER2/SEER2	12.2	16	Not Zonal	Single Speed	Cooling Component 1-hers-cool

HVAC COOLING - HERS VERIFICATION						
01	02	03	04	05	06	
Name	Verified Airflow	Airflow Target	Verified EER/EER2	Verified SEERSEER2	Verified Refrigerant Charge	
Cooling Component 1-hers-cool	Required	350	Not Required	Not Required	Required	

HVAC - DISTRIBUTION SYSTEMS											
01	02	03	04	05	06	07	08	09	10	11	12
Name	Type	Design Type	Duct Ins. R-value		Duct Location		Surface Area		Bypass Duct	Duct Leakage	HERS Verification
			Supply	Return	Supply	Return	Supply	Return			
Air Distribution System 1	Unconditioned attic	Non-Verified	R-8	R-8	Attic	Attic	n/a	n/a	No Bypass Duct	Sealed and Tested	Air Distribution System 1-hers-dist

HVAC DISTRIBUTION - HERS VERIFICATION								
01	02	03	04	05	06	07	08	09
Name	Duct Leakage Verification	Duct Leakage Target (%)	Verified Duct Location	Verified Duct Design	Buried Ducts	Deeply Buried Ducts	Low-leakage Air Handler	Low Leakage Ducts Entirely in Conditioned Space
Air Distribution System 1-hers-dist	Yes	5.0	Not Required	Not Required	Not Required	Credit not taken	Not Required	No

HVAC - FAN SYSTEMS				
01	02	03	04	
Name	Type	Fan Power (Watts/CFM)	Name	
HVAC Fan 1	HVAC Fan	0.45	HVAC Fan 1-hers-fan	

HVAC FAN SYSTEMS - HERS VERIFICATION		
01	02	03
Name	Verified Fan Watt Draw	Required Fan Efficacy (Watts/CFM)
HVAC Fan 1-hers-fan	Required	0.45

INDOOR AIR QUALITY (IAQ) FANS								
01	02	03	04	05	06	07	08	09
Dwelling Unit	Airflow (CFM)	Fan Efficacy (W/CFM)	IAQ Fan Type	Includes Heat/Energy Recovery?	IAQ Recovery Effectiveness - SRE	Includes Fault Indicator Display?	HERS Verification	Status
SFam IAQVentRpt	113	0.35	Exhaust	No	n/a	No	Yes	

DOCUMENTATION AUTHOR'S DECLARATION STATEMENT	
I, I certify that this Certificate of Compliance documentation is accurate and complete.	
Documentation Author Name: Guillermo Palafox	Documentation Author Signature: Guillermo Palafox
Company: GP Fox Drafting	Signature Date: 03/17/2026
Address: 8050 Florence Avenue	CEA / HERS Certification Identification (if applicable): 226965
City/State/Zip: Downey, CA 90240	Phone: (562) 928-5467

RESPONSIBLE PERSON'S DECLARATION STATEMENT	
I certify the following under penalty of perjury, under the laws of the State of California: 1. I am eligible under Division 3 of the Business and Professions Code to accept responsibility for the building design identified on this Certificate of Compliance. 2. I certify that the energy features and performance specifications identified on this Certificate of Compliance conform to the requirements of Title 24, Part 1 and Part 6 of the California Code of Regulations. 3. The building design features or system design features identified on this Certificate of Compliance are consistent with the information provided on other applicable compliance documents, worksheets, calculations, plans and specifications submitted to the enforcement agency for approval with this building permit application.	
Responsible Designer Name: Guillermo Palafox	Responsible Designer Signature: Guillermo Palafox
Company: GP Fox Drafting	Date Signed: 03/17/2026
Address: 8050 Florence Avenue	License: 226965
City/State/Zip: Downey, CA 90240	Phone: (562) 928-5467

Digitally signed by California Home Energy Efficiency Rating Services (CHEERS). This digital signature is provided in order to secure the content of this registered document, and in no way implies Registration Provider responsibility for the accuracy of the information.

BUILDING AND SAFETY DIVISION
Department of Public Works
APPROVED
UNDER LOS ANGELES COUNTY CODE
TITLES 26, 30 AND 31
DMcCombs
PUBLIC WORKS
04/08/2026 11:18:30 AM
This set of plans and specifications must be kept at the job site at all times and it is unlawful to make any changes, modifications or alterations to these plans or specifications without the prior written permission of the Building Official. The stamping of this set of plans and specifications SHALL NOT, under any circumstances, be deemed to permit or to be an approval of any work or activity that violates any provisions of any County Ordinance or State Law

CABEC CERTIFIED ENERGY ANALYST

NOTICE: This document has been generated by California Home Energy Efficiency Rating Services (CHEERS) using information uploaded by third parties not affiliated with or related to CHEERS. Therefore, CHEERS is not responsible for, and cannot guarantee, the accuracy or completeness of the information contained in this document.

REVISIONS	BY

Plans drawn by:
G P. FOX DRAFTING INC.
RESIDENTIAL DRAFTING
8050 E. FLORENCE AVE, SUITE.27
DOWNEY, CA 90240
(562) 928-5467
email: gpfoxdesign@verizon.net

GENERAL NOTES

1. VERIFY MEASUREMENTS WITH CORRESPONDING CONSTRUCTED OR EXISTING CONDITIONS PRIOR TO PROCEEDING WITH THE WORK, AND NOTIFY THE DRAFTSMAN IMMEDIATELY OF SIGNIFICANT DISCREPANCIES.
2. FINISH ELEVATIONS REFERENCED ON THE DRAWINGS ARE DATUM ELEVATIONS ABOVE THE FINISH FLOOR ELEVATION. THE CONTRACTOR MUST COORDINATE DATUM-BASED ELEVATIONS SHOWN WITH SITE-SPECIFIC ELEVATIONS SHOWN ON CIVIL DRAWINGS.
3. WALL DIMENSIONS SHOWN ARE TO FACE OF WALL FINISH UNLESS SPECIFICALLY NOTED OTHERWISE.

Project:
PROPOSED NEW 2-STORY S.F.D. AND AN ADU

Sheet Title:
ENERGY FORMS MAIN HOUSE

Project for:
SALVADOR POLINA

Project Address:
13828, 13828 1/2 CREWE ST WHITTIER , CA.90605

BLDR240320002527

Checked	G.P.
Job no.	----
Drawn	J.P.M
Date	03/19/2024

SHEET: **18** OF SHEETS

GENERAL INFORMATION

01	Project Name	2-STORY ADU			
02	Run Title	Title 24 Analysis			
03	Project Location	13828 CREWE ST			
04	City	WHITTIER	05	Standards Version	2022
06	Zip code	90605	07	Software Version	EnergyPro 9.1
08	Climate Zone	8	09	Front Orientation (deg/ Cardinal)	0
10	Building Type	Single family	11	Number of Dwelling Units	1
12	Project Scope	Newly Constructed	13	Number of Bedrooms	3
14	Addition Cond. Floor Area (ft²)	0	15	Number of Stories	2
16	Existing Cond. Floor Area (ft²)	n/a	17	Fenestration Average U-factor	0.28
18	Total Cond. Floor Area (ft²)	1171.3	19	Glazing Percentage (%)	12.90%
20	ADU Bedroom Count	n/a			

COMPLIANCE RESULTS

01	Building Complies with Computer Performance
02	This building incorporates features that require field testing and/or verification by a certified HERS rater under the supervision of a CEC-approved HERS provider.
03	This building incorporates one or more Special Features shown below

ENERGY DESIGN RATINGS

	Energy Design Ratings			Compliance Margins		
	Source Energy (EDR1)	Efficiency[1] EDR (EDR2Efficiency)	Total[2] EDR (EDR2Total)	Source Energy (EDR1)	Efficiency[3] EDR (EDR2Efficiency)	Total[2] EDR (EDR2Total)
Standard Design	37.3	37.9	27			
Proposed Design	36.5	30.7	22.2	0.8	7.3	4.8

RESULT[3]: PASS

[1]Efficiency EDR includes improvements like a better building envelope and more efficient equipment
[2]Total EDR includes efficiency and demand response measures such as photovoltaic (PV) system and batteries
[3]Building complies when source energy, efficiency and total compliance margins are greater than or equal to zero and unmet load hour limits are not exceeded

- Standard Design PV Capacity: 2.45 kWdc
- PV System resized to 2.45 kWdc (a factor of 2.450) to achieve "Standard Design PV" PV scaling.

ENERGY USE SUMMARY

Energy Use	Standard Design Source Energy (EDR1) (kBtu/ft² -yr)	Standard Design TDV Energy (EDR2) (kTDV/ft² -yr)	Proposed Design Source Energy (EDR1) (kBtu/ft² -yr)	Proposed Design TDV Energy (EDR2) (kTDV/ft² -yr)	Compliance Margin (EDR1)	Compliance Margin (EDR2)
Space Heating	0.68	3.06	0.48	2.16	0.2	0.9
Space Cooling	1.05	23.78	0.77	18.78	0.28	5
IAQ Ventilation	0.43	4.48	0.43	4.48	0	0
Water Heating	1.75	18.48	1.35	22.95	-3.6	-4.47
Self Utilization/Flexibility Credit				-7.97		7.97
Efficiency Compliance Total	3.91	49.8	7.03	40.4	-3.12	9.4
Photovoltaics	-2.29	-68.97	-2.05	-61.86		
Battery			-3.62	-10.08		
Flexibility						
Indoor Lighting	0.81	7.63	0.81	7.63		
Appl. & Cooking	4.82	31.26	4.82	31.26		
Plug Loads	4.67	47.6	4.67	47.6		
Outdoor Lighting	0.2	1.71	0.2	1.71		
TOTAL COMPLIANCE	12.12	69.03	11.86	56.66		

ENERGY USE INTENSITY

	Standard Design (kBtu/ft² - yr)	Proposed Design (kBtu/ft² - yr)	Compliance Margin (kBtu/ft² - yr)	Margin Percentage
Gross EUI[1]	18.55	22.23	-3.68	-19.84
Net EUI[2]	6.89	11.98	-5.09	-73.88

Notes
1. Gross EUI is Energy Use Total (not including PV) / Total Building Area.
2. Net EUI is Energy Use Total (including PV) / Total Building Area.

REQUIRED PV SYSTEMS

01	02	03	04	05	06	07	08	09	10	11	12
DC System Size (kWdc)	Exception	Module Type	Array Type	Power Electronics	CFI	Azimuth (deg)	Tilt Input	Array Angle (deg)	Tilt: (a in 12)	Inverter Eff. (%)	Annual Solar Access (%)
2.45	NA	Standard (14-17%)	Fixed	none	false	90	Degrees	22	4.85	96	100

BATTERY SYSTEMS

01	02	03	04	05	06	07
Control	Capacity (kWh)	Charging		Discharging		Round Trip Efficiency
		Charging Efficiency	Charging Rate (kW)	Discharging Efficiency	Discharging Rate (kW)	
Basic	12	0.95	n/a	0.95	n/a	0.9

REQUIRED SPECIAL FEATURES

The following are features that must be installed as condition for meeting the modeled energy performance for this computer analysis.

- Battery System: 12 kWh (Self Utilization Credit taken)
- Cool roof
- Insulation below roof deck

HERS FEATURE SUMMARY

The following is a summary of the features that must be field-verified by a certified HERS Rater as a condition for meeting the modeled energy performance for this computer analysis. Additional detail is provided in the building tables below. Registered CF2Rs and CF3Rs are required to be completed in the HERS Registry

- Quality Insulation Installation (QII)
- Indoor air quality ventilation
- Kitchen range hood
- Minimum Airflow
- Verified EER/EER2
- Verified SEER/SEER2
- Verified Refrigerant Charge
- Fan Efficacy Watts/CFM
- Duct leakage testing
- Compact distribution system expanded credit
- Drain water heat recovery system

BUILDING - FEATURES INFORMATION

01	02	03	04	05	06	07
Project Name	Conditioned Floor Area (ft²)	Number of Dwelling Units	Number of Bedrooms	Number of Zones	Number of Ventilation Cooling Systems	Number of Water Heating Systems
2-STORY ADU	1171.3	1	3	2	0	1

ZONE INFORMATION

01	02	03	04	05	06	07
Zone Name	Zone Type	HVAC System Name	Zone Floor Area (ft²)	Avg. Ceiling Height	Water Heating System 1	Status
1st Floor Zone	Conditioned	Res HVAC1	487.4	8	DHW Sys 1	New
2nd Floor Zone	Conditioned	Res HVAC1	683.9	8	DHW Sys 1	New

OPAQUE SURFACES

01	02	03	04	05	06	07	08
Name	Zone	Construction	Azimuth	Orientation	Gross Area (ft²)	Window and Door Area (ft2)	Tilt (deg)
Front Wall	1st Floor Zone	R-15 Wall	0	Front	240	44	90
Left Wall	1st Floor Zone	R-15 Wall	90	Left	160	16	90

OPAQUE SURFACES

01	02	03	04	05	06	07	08
Name	Zone	Construction	Azimuth	Orientation	Gross Area (ft²)	Window and Door Area (ft2)	Tilt (deg)
Back Wall	1st Floor Zone	R-15 Wall	180	Back	240	45	90
Right Wall	1st Floor Zone	R-15 Wall	270	Right	160	0	90
Front Wall 2	2nd Floor Zone	R-15 Wall	0	Front	225	22	90
Left Wall 2	2nd Floor Zone	R-15 Wall	90	Left	150	24	90
BackWall	2nd Floor Zone	R-15 Wall	180	Back	225	20	90
Right Wall 2	2nd Floor Zone	R-15 Wall	270	Right	150	0	90
R-38 Roof	2nd Floor Zone	R-38 HP Attic	n/a	n/a	683.9	n/a	n/a
Interior Floor	2nd Floor Zone	R-0 Floor No Crawlspace	n/a	n/a	700	n/a	n/a

ATTIC

01	02	03	04	05	06	07	08
Name	Construction	Type	Roof Rise (x in 12)	Roof Reflectance	Roof Emittance	Radiant Barrier	Cool Roof
Attic 2nd Floor Zone	Attic Roof2nd Floor Zone	Ventilated	4	0.35	0.85	Yes	Yes

FENESTRATION / GLAZING

01	02	03	04	05	06	07	08	09	10	11	12	13	14
Name	Type	Surface	Orientation	Azimuth	Width (ft)	Height (ft)	Mult.	Area (ft²)	U-factor	U-factor Source	SHGC	SHGC Source	Exterior Shading
Front Windows	Window	Front Wall	Front	0			1	24	0.28	NFRC	0.23	NFRC	Bug Screen
Window	Window	Left Wall	Left	90			1	16	0.28	NFRC	0.23	NFRC	Bug Screen
Window 2	Window	Back Wall	Back	180			1	45	0.28	NFRC	0.23	NFRC	Bug Screen
Front Windows 2	Window	Front Wall 2	Front	0			1	22	0.28	NFRC	0.23	NFRC	Bug Screen
Window 3	Window	Left Wall 2	Left	90			1	24	0.28	NFRC	0.23	NFRC	Bug Screen

FENESTRATION / GLAZING

01	02	03	04	05	06	07	08	09	10	11	12	13	14
Name	Type	Surface	Orientation	Azimuth	Width (ft)	Height (ft)	Mult.	Area (ft²)	U-factor	U-factor Source	SHGC	SHGC Source	Exterior Shading
Window 4	Window	BackWall	Back	180			1	20	0.28	NFRC	0.23	NFRC	Bug Screen

OPAQUE DOORS

01	02	03	04
Name	Side of Building	Area (ft²)	U-factor
Door	Front Wall	20	0.5

SLAB FLOORS

01	02	03	04	05	06	07	08
Name	Zone	Area (ft²)	Perimeter (ft)	Edge Insul. R-value and Depth	Edge Insul. R-value and Depth	Carpeted Fraction	Heated
Slab-on-Grade	1st Floor Zone	487.4	400	none	0	80%	No

OPAQUE SURFACE CONSTRUCTIONS

01	02	03	04	05	06	07	08
Construction Name	Surface Type	Construction Type	Framing	Total Cavity R-value	Interior / Exterior Continuous R-value	U-factor	Assembly Layers
R-15 Wall	Exterior Walls	Wood Framed Wall	2x4 @ 16 in. O. C.	R-15	15 / None	0.036	Inside Finish: Gypsum Board Sheathing / Insulation: R-15 Sheathing Cavity / Frame: R-15 / 2x4 Exterior Finish: 3 Coat Stucco
Attic Roof2nd Floor Zone	Attic Roofs	Wood Framed Ceiling	2x6 @ 24 in. O. C.	R-38	None / 0	0.033	Roofing: Light Roof (Asphalt Shingle) Roof Deck: Wood Siding/sheathing/decking Cavity / Frame: R-20.4 / 2x6 Around Roof Joists: R-17.6 insul.

OPAQUE SURFACE CONSTRUCTIONS

01	02	03	04	05	06	07	08
Construction Name	Surface Type	Construction Type	Framing	Total Cavity R-value	Interior / Exterior Continuous R-value	U-factor	Assembly Layers
R-38 HP Attic	Ceilings (below attic)	Wood Framed Ceiling	2x6 @ 16 in. O. C.	R-38	None / None	0.026	Over Ceiling Joists: R-23.7 insul. Cavity / Frame: R-14.3 / 2x6 Inside Finish: Gypsum Board
R-0 Floor No Crawlspace	Interior Floors	Wood Framed Floor	2x12 @ 16 in. O. C.	R-0	None / None	0.196	Floor Surface: Carpeted Floor Deck: Wood Siding/sheathing/decking Cavity / Frame: no insul. / 2x12 Ceiling Below Finish: Gypsum Board

BUILDING ENVELOPE - HERS VERIFICATION

01	02	03	04	05
Quality Insulation Installation (QII)	High R-value Spray Foam Insulation	Building Envelope Air Leakage	CFM50	CFM50
Required	Not Required	n/a	n/a	n/a

WATER HEATING SYSTEMS

01	02	03	04	05	06	07	08	09
Name	System Type	Distribution Type	Water Heater Name	Number of Units	Solar Heating System	Compact Distribution	HERS Verification	Water Heater Name (#)
DHW Sys 1	Domestic Hot Water (DHW)	Standard	DHW Heater 1	1	n/a	Expanded	DHW Sys 1-hers-dhw	DHW Heater 1 (1)

WATER HEATERS

01	02	03	04	05	06	07	08	09	10	11	12	13
Name	Heating Element Type	Tank Type	# of Units	Tank Vol. (gal)	Heating Efficiency Type	Efficiency	Rated Input Type	Input Rating or Pilot	Tank Insulation R-value (int/Ext)	Standby Loss or Recovery Eff	1st Hr. Rating or Flow Rate	Tank Location
DHW Heater 1	Gas	Consumer Instantaneous	1	0	UEF	0.95	Btu/Hr	200000	0	n/a		

WATER HEATING - COMPACT DISTRIBUTION

01	02	03	04	05	06	07
Dwelling Unit type	Water Heating System Name	Master Bath distance of furthest fixture to Water Heater (ft)	Kitchen distance of furthest fixture to Water Heater (ft)	Furthest Third furthest fixture to Water Heater (ft)	Compactness Factor	HERS Verification
Dwelling	DHW Sys 1	n/a	n/a	n/a	0.6	Expanded Credit

WATER HEATING - DRAIN WATER HEAT RECOVERY

01	02	03	04	05	06
Dwelling Unit type	DHW System and DWHR Names	Installation Configuration	Shower Drains	Shower Drain Water Heat Recovery Efficiency (%)	HERS Verification
Dwelling	DHW Sys 1 - 1 - DWHR-1	Equal Flow	2	43	Required

WATER HEATING - HERS VERIFICATION

01	02	03	04	05	06	07
Name	Pipe Insulation	Parallel Piping	Compact Distribution	Compact Distribution Type	Recirculation Control	Shower Drain Water Heat Recovery
DHW Sys 1 - 1/1	Not Required	Not Required	Required	Expanded	Not Required	Required

SPACE CONDITIONING SYSTEMS

01	02	03	04	05	06	07	08	09
Name	System Type	Heating Unit Name	Heating Equipment Count	Cooling Unit Name	Cooling Equipment Count	Fan Name	Distribution Name	Required Thermostat Type
Res HVAC1	Heating and cooling system other	Heating Component 1	1	Cooling Component 1	1	HVAC Fan 1	Air Distribution System 1	Setback

HVAC - HEATING UNIT TYPES

01	02	03	04
Name	System Type	Number of Units	Heating Efficiency
Heating Component 1	Central gas furnace	1	AFUE-96

HVAC - COOLING UNIT TYPES

01	02	03	04	05	06	07	08	09
Name	System Type	Number of Units	Efficiency Metric	Efficiency EER/EER2/CEER	Efficiency SEER/SEER2	Zonally Controlled	Multi-speed Compressor	HERS Verification
Cooling Component 1	Central split AC	1	EER2/SEER2	12.2	16	Not Zonal	Single Speed	Cooling Component 1-hers-cool

HVAC COOLING - HERS VERIFICATION

01	02	03	04	05	06
Name	Verified Airflow	Airflow Target	Verified EER/EER2	Verified SEERSEER2	Verified Refrigerant Charge
Cooling Component 1-hers-cool	Required	350	Not Required	Not Required	Required

HVAC - DISTRIBUTION SYSTEMS

01	02	03	04	05	06	07	08	09	10	11	12
Name	Type	Design Type	Duct Ins. R-value		Duct Location		Surface Area		Bypass Duct	Duct Leakage	HERS Verification
			Supply	Return	Supply	Return	Supply	Return			
Air Distribution System 1	Unconditioned attic	Non-Verified	R-8	R-8	Attic	Attic	n/a	n/a	No Bypass Duct	Sealed and Tested	Air Distribution System 1-hers-dist

HVAC DISTRIBUTION - HERS VERIFICATION

01	02	03	04	05	06	07	08	09
Name	Duct Leakage Verification	Duct Leakage Target (%)	Verified Duct Location	Verified Duct Design	Buried Ducts	Deeply Buried Ducts	Low-leakage Air Handler	Low Leakage Ducts Entirely in Conditioned Space
Air Distribution System 1-hers-dist	Yes	5.0	Not Required	Not Required	Not Required	Credit not taken	Not Required	No

HVAC - FAN SYSTEMS

01	02	03	04
Name	Type	Fan Power (Watts/CFM)	Name
HVAC Fan 1	HVAC Fan	0.45	HVAC Fan 1-hers-fan

HVAC FAN SYSTEMS - HERS VERIFICATION

01	02	03
Name	Verified Fan Watt Draw	Required Fan Efficacy (Watts/CFM)
HVAC Fan 1-hers-fan	Required	0.45

INDOOR AIR QUALITY (IAQ) FANS

01	02	03	04	05	06	07	08	09
Dwelling Unit	Airflow (CFM)	Fan Efficacy (W/CFM)	IAQ Fan Type	Includes Heat/Energy Recovery?	IAQ Recovery Effectiveness - SRE	Includes Fault Indicator Display?	HERS Verification	Status
5Fam IAQVentRpt	64	0.35	Exhaust	No	n/a	No	Yes	

DOCUMENTATION AUTHOR'S DECLARATION STATEMENT

I, I certify that this Certificate of Compliance documentation is accurate and complete.

Documentation Author Name: Guillermo Palafox	Documentation Author Signature: Guillermo Palafox
Company: GP Fox Drafting	Signature Date: 03/17/2026
Address: 8050 Florence Avenue	CEA/ HERS Certification Identification (if applicable): 226965
City/State/Zip: Downey, CA 90240	Phone: (562) 928-5467

RESPONSIBLE PERSON'S DECLARATION STATEMENT

I certify the following under penalty of perjury, under the laws of the State of California:
1. I am eligible under Division 3 of the Business and Professions Code to accept responsibility for the building design identified on this Certificate of Compliance.
2. I certify that the energy features and performance specifications identified on this Certificate of Compliance conform to the requirements of Title 24, Part 1 and Part 6 of the California Code of Regulations.
3. The building design features or system design features identified on this Certificate of Compliance are consistent with the information provided on other applicable compliance documents, worksheets, calculations, plans and specifications submitted to the enforcement agency for approval with this building permit application.

Responsible Designer Name: Guillermo Palafox	Responsible Designer Signature: Guillermo Palafox
Company: GP Fox Drafting	Date Signed: 03/17/2026
Address: 8050 Florence Avenue	License: 226965
City/State/Zip: Downey, CA 90240	Phone: (562) 928-5467

CABEC CERTIFIED ENERGY ANALYST

Digitally signed by California Home Energy Efficiency Rating Services (CHEERS). This digital signature is provided in order to secure the content of this registered document, and in no way implies Registration Provider responsibility for the accuracy of the information.

BUILDING AND SAFETY DIVISION
Department of Public Works
APPROVED
UNDER LOS ANGELES COUNTY CODE
TITLES 26, 30 AND 31
DMcComas
PUBLIC WORKS
04/08/2026 11:18:30 AM
This set of plans and specifications must be kept at the job site at all times, and it is unlawful to make any changes, modifications or deletions to these plans or specifications without the prior written permission of the Building Official. The stamping of this set of plans and specifications SHALL NOT, under any circumstances, be deemed to permit or to be an approval of any work or activity that violates any provisions of any County Ordinance or State Law

REVISIONS	BY

Plans drawn by:

G P. FOX DRAFTING INC.
RESIDENTIAL DRAFTING
8050 E. FLORENCE AVE, SUITE.27
DOWNEY, CA 90240
(562) 928-5467
email: gpfoxdesign@verizon.net

GENERAL NOTES

1. VERIFY MEASUREMENTS WITH CORRESPONDING CONSTRUCTED OR EXISTING CONDITIONS PRIOR TO PROCEEDING WITH THE WORK, AND NOTIFY THE DRAFTSMAN IMMEDIATELY OF SIGNIFICANT DISCREPANCIES.
2. FINISH ELEVATIONS REFERENCED ON THE DRAWINGS ARE DATUM ELEVATIONS ABOVE THE FINISH FLOOR ELEVATION. THE CONTRACTOR MUST COORDINATE DATUM–BASED ELEVATIONS SHOWN WITH SITE–SPECIFIC ELEVATIONS SHOWN ON CIVIL DRAWINGS.
3. WALL DIMENSIONS SHOWN ARE TO FACE OF WALL FINISH UNLESS SPECIFICALLY NOTED OTHERWSE.

Project:

PROPOSED NEW 2-STORY S.F.D. AND AN ADU

Sheet Title:

ENERGY FORMS ADU

Project for:

SALVADOR POLINA

Project: Address:

13828, 13828 1/2 CREWE ST WHITTIER , CA.90605

BLDR240320002531

Checked	G.P.
Job no.	----
Drawn	J.P.M
Date	03/19/2024

SHEET: **19**

OF SHEETS

COUNTY OF LOS ANGELES
DEPARTMENT OF PUBLIC WORKS
BUILDING AND SAFETY DIVISION

RESIDENTIAL PLAN
GENERAL NOTES

GENERAL PROJECT INFORMATION

PLAN CHECK NO. _____ DISTRICT NO _____
JOB ADDRESS 13828, 13828 1/2 CREWE ST CITY WHITTIER CA ZIP _____

NOTE: Numbers in the parenthesis ( ) refer to sections of the 2023 edition of the County of Los Angeles Building Code (BC), Residential Code (R), Plumbing Code (PC), Mechanical Code (MC), Electrical Code (EC), and Green Building Standards Code (GC).

INSTRUCTIONS

- The following notes must be included on the plans.

SECURITY REQUIREMENTS

1. Exterior doors, doors between house and garage, windows and their hardware shall conform to the Security Provisions of Chapter 67 of the Los Angeles County Building Code (LACBC):
   a. Single swinging doors, active leaf of a pair of doors, and the bottom leaf of Dutch doors shall be equipped with a latch and a deadbolt key operated from the outside. Deadbolts shall have a hardened insert with 1" minimum throw and 5/8" minimum embedment into the jamb. If a latch has a key locking feature, it shall be dead latch type. (BC6709.2)
   b. Inactive leaf of a pair of doors and the upper leaf of Dutch doors shall have a deadbolt as per paragraph "a", unless it is not key operated from the exterior, or has a hardened deadbolt at top and bottom with ½" embedment. (BC6709.3)
   c. Swinging wood door(s) shall be solid core not less than 1-3/8" thick. (BC6709.1.1)
   d. Panels of wood doors shall be 9/16" thick and not more than 300 sq. inches. Stiles and rails to be 1-3/8" thick and 3" minimum width. (BC6709.1.2)
   e. Door hinge pins accessible from the outside shall be non-removable. (BC6709.5)
   f. Door stops of wood jambs of in-swinging doors shall be one piece construction or joined by a rabbet. (BC 6709.4)
   g. Windows and door lights within 40" of the locking device of the door shall be fully tempered/approved burglary resistant/protected by bars, screens or grills. (BC6714)
   h. Overhead and sliding garage doors shall be secured with a cylinder lock, a padlock with a hardened steel shackle, or equivalent when not otherwise locked by electric power operation. Jamb locks shall be on both jambs for doors exceeding 9 feet in width (BC6711)
   i. Sliding glass doors and sliding glass windows shall be capable of withstanding the tests set forth in Section 6706 and 6707 of the Los Angeles County Building Code and shall bear a label indicating compliance with these tests. (BC 6710, 6715)

CONSTRUCTION REQUIREMENTS

2. Notching of exterior and bearing/nonbearing walls shall not exceed 25% / 40% of its width, respectively. Bored holes in bearing/nonbearing walls shall not exceed 40% / 60% of its width, respectively. (R602.6)
3. Interior finishes in Group R-3 shall have a flame spread index of not greater than 200, and a smoke-developed index not greater than 450. (R302.9)
4. Provide fire blocking in concealed spaces of stud walls, partitions, including furred spaces, at the ceiling and floor level, and at 10-foot intervals both vertical and horizontal. (R302.11)
5. Ducts installed under a floor in a crawl space shall not prevent access to an area of the crawl space. Where it is required to move under ducts for access to areas of the crawl space, a vertical clearance of 18" minimum shall be provided. (MC 603.1)
6. Where flashing is of metal, the metal shall be corrosion resistant with a thickness of not less than .019 inch (No. 26 galvanized sheet). (R903.2.1)
7. Note on the plans: "Roof diaphragm nailing to be inspected before covering. Face grain of plywood shall be perpendicular to supports."
8. Subfloors shall have end-matched lumber, have blocked panel edges, or occur over supports. Floor sheathing shall comply with Section R503.
9. Provide a note: "SMOKE ALARM shall be interconnected hard-wired with battery backup and shall be installed in accordance with NFPA 72." (R314)
10. Provide a note: "CARBON MONOXIDE ALARM shall be interconnected hard-wired with battery backup." (R315)

11. Finish materials including adhesives, sealants, caulk, paints & coatings, carpet systems, etc. shall meet the (VOC) emission limits per LACGBSC Chapter 4.
12. In newly constructed dwelling units, electrical receptacle outlets, switches and controls shall be located no more than 48-in. measured from the top of the outlet box and not less than 15-in. from the bottom of the outlet box above the finish floor. (R327.1.2)
13. In newly constructed dwelling units, doorbell button or controls, shall not exceed 48-in. above exterior floor or landing, measured from the top of the doorbell button assembly. (R327.1.4)
14. Provide a note on the plans "Fasteners for preservative-treated or fire-retardant-treated wood shall be of hot dipped zinc-coated galvanized steel in accordance with ASTM A 153." (R317.3)

GLAZING REQUIREMENTS

15. The following shall be considered specific hazardous locations requiring safety glazing per Section R308:
   a. Glazing in fixed and operable panels of swinging, sliding, and bifold doors.
   b. Glazing in fixed or operable panels adjacent to a door where the nearest vertical edge of the glazing is within a 24-inch arc of either vertical edge of the door in a closed position and where the bottom exposed edge of the glazing is less than 60 inches above the walking surface.
   c. Window glazing in an individual fixed or operable panel, that meets all of the following conditions:
      1. The exposed area of an individual pane is larger than 9 square feet.
      2. The bottom edge is less than 18 inches above the floor.
      3. The top edge is more than 36 inches above the floor.
      4. One or more walking surfaces are within 36 inches, measured horizontally and in a straight line, of the glazing
   d. Glazing in guards, railings, structural baluster panels, and nonstructural in-fill panels, regardless of area or height above a walking surface.
   e. Glazing in walls, enclosures or fences containing or facing hot tubs, spas, whirlpools, saunas, steam rooms, bathtubs, showers, and indoor or outdoor swimming pools, where all of the following conditions are present:
      1. The bottom edge of the glazing is less than 60 inches above any standing or walking surface.
      2. The glazing is within 60 inches, measured horizontally and in a straight line, from a hot tub, spa, whirlpool, bathtub, or swimming pool.
   f. Glazing adjacent to stairs and ramps where the bottom exposed edge is less than 36 inches above the plane of the adjacent walking surface of stairways, landings between flights of stairs, and ramps, unless the glazing is more than 36 inches measured horizontally from the walking surface, or a rail is designed per Section R308.4.6.
   g. Glazing adjacent to the landing at the bottom of a stairway where the glazing is less than 36 inches above the landing and within 60 inches horizontally of the bottom tread, unless the glazing is more than 18 inches from a protective guard per Section R312.

MECHANICAL/PLUMBING/ELECTRICAL CODE REQUIREMENTS

16. Dwelling shall be provided with comfort heating facilities capable of maintaining a room temperature of 68 degrees F at 3 feet above the floor and 2 feet from exterior walls. (R303.10)
17. The following are required for central heating furnaces and low-pressure boilers in a compartment:
   a. Listed appliances shall be installed with clearances in accordance with the terms of their listings and the manufacturer's installation instructions. (MC 904.2(1))
   b. Unlisted appliances shall meet both the clearances in Table 904.2, and the clearances allowed by the manufacturer's installation instructions. (MC 904.2(2))
   c. When combustion air is taken from inside, the area of combustion air openings shall be 1 sq. inch per 1,000 BTU (100 sq. inch minimum) per opening. One Opening shall be within 12 inches of the ceiling and the second shall be within 12 inches of the bottom of the enclosure. The dimension shall not be less than 3 inches. (MC 701.5(1))
   d. 1/4 inch screens are required at openings where combustion air is taken from the outside. (MC 701.10(2))
   e. Separate ducts shall be used for upper and lower combustion air openings, and maintained to the source of combustion air. (MC 701.11(4))
18. The following are required for appliances installed in an attic:
   a. An opening and passageway shall not be less than 22 inches by 30 inches, or less than the size of the largest piece of equipment. (MC 904.10)
   b. Where the passageway height is less than 6 feet, the distance from access to the appliance shall not exceed 20 feet, as measured along the centerline. (MC 904.10.1)
   c. Passageway shall be unobstructed and shall have solid flooring not less than 24 inches wide from entrance to appliance. (MC 904.10.2)
   d. A level working platform not less than 30 inches by 30 inches is required in front of the service side of the appliance. (MC 904.10.3)
   e. A permanent 120V receptacle outlet and a lighting fixture shall be installed near the appliance. Light switch shall be located at the entrance to the passageway. (MC 904.10.4)
   f. A type B or L gas vent shall terminate not less than 5 feet above the highest connected appliance flue collar or draft hood. (MC 802.6.2.1)
   g. Appliance installation shall meet all listed clearances. (MC 303.2)
19. Clothes dryer moisture exhaust duct shall terminate on the outside of the building and shall be equipped with a back-draft damper. Screens shall not be used and the exhaust duct may not extend into or through ducts and plenums. (MC 504.3)
20. Clothes dryer moisture exhaust duct shall be 4 inches in diameter and length is limited to 14 feet with two elbows from the clothes dryer to point of termination. Duct length shall be reduced by 2 feet for every elbow in excess of two. (MC 504.3.1 & 504.3.1.2)
21. Heating appliances (water heater, furnace, etc.) located in the garage, which create a glow, spark or flame, shall be installed at least 18 inches above the floor. (MC 308.1)
22. Ducts shall be sized per Chapter 6 of the Mechanical Code.
23. The effective flush volume of all water closets shall not exceed 1.28gpf. Urinals shall be 0.5gpf maximum. (GC 4.303.1.1)
24. Single shower heads shall have a maximum flow rate or 2.0gpm at 80psi. Multiple shower heads serving one shower shall have a combined flow rate of 2.0gpm at 80psi, or the shower shall be designed to allow only one shower outlet to be in operation at a time. (GC 4.303.1.3)
25. Lavatory faucets shall not exceed 1.5gpm at 60psi. The minimum flow rate shall not be less than 0.8gpm at 20psi. (GC 4.303.1.4)
26. Kitchen faucets shall not exceed 1.8gpm at 60psi. The faucet may temporarily increase to above this rate, but not to exceed 2.2gpm at 60psi, and must default to the maximum flow rate of 1.8gpm at 60psi. (GC 4.303.1.4)
27. ABS and PVC DWV piping installations are limited to not more than two stories of areas. (PC 701.1(2))
28. All showers and tub-showers shall have a pressure balance, thermostatic mixing valve, or a combination pressure balance/thermostatic mixing type valve. (PC 418)
29. All new, replacement and existing water heaters shall be strapped to the wall in two places. One on the upper 1/3 of the tank, and one on the lower 1/3 of the tank. The lower point shall be a minimum of 4 inches above the controls. (PC 508.2)
30. Plumbing plan check and approval are required for 2 inch or larger gas lines and/or water lines.
31. Ground-fault circuit-interruption (GFCI) for personnel shall be provided per EC section 210.8(A), and installed in a readily accessible location.
32. Arc-fault circuit-interruption shall be installed to provide protection of the branch circuit. (EC 210.12)
33. Tamper-resistant receptacles shall be installed in all areas specified in 210.52, all nonlocking-type 12-volt, 15- and 20-ampere receptacles shall be listed tamper-resistant receptacles. (EC 406.12)
34. Where NM Cable (Romex) is run across the top of ceiling joists and/or where the attic is not accessible by permanent stairs or ladders, protection within 6 feet of the nearest edge of the scuttle or attic entrance shall be provided. (EC 334.23, 320.23(A))

BUILDING AND SAFETY DIVISION
Department of Public Works
APPROVED
UNDER LOS ANGELES COUNTY CODE
TITLES 26, 30 AND 31
DMcCombs
PUBLIC WORKS
04/08/2026 11:18:30 AM
This set of plans and specifications must be kept at the job site at all times and it is unlawful to make any changes, modifications or deviations to these plans or specifications without the prior written permission of the Building Official. The stamping of this set of plans and specifications SHALL NOT, under any circumstances, be deemed to permit or to be an approval of any work or activity that violates any provisions of any County Ordinance or State Law

BEST MANAGEMENT PRACTICES
FOR CONSTRUCTION ACTIVITIES*

Storm Water Pollution Control Requirements for Construction Activities
Minimum Water Quality Protection Requirements for All Development Construction Projects/Certification Statement

The following is intended as minimum notes or as an attachment for building and grading plans and represent the minimum standards of good housekeeping that must be implemented on all construction sites regardless of size. (Applies to all permits)

- Every effort should be made to eliminate the discharge of non-stormwater from the project site at all times.
- Eroded sediments and other pollutants must be retained on site and may not be transported from the site via sheetflow, swales, area drains, natural drainage courses or wind.
- Stockpiles of earth and other construction related materials must be protected from being transported from the site by the forces of wind or water.
- Fuels, oils, solvents and other toxic materials must be stored in accordance with their listing and are not to contaminate the soil and surface waters. All approved storage containers are to be protected from the weather. Spills must be cleaned up immediately and disposed of in a proper manner. Spills may not be washed into the drainage system.
- Excess or waste concrete may not be washed into the public way or any other drainage system. Provisions shall be made to retain concrete wastes on site until they can be disposed of as solid waste.
- Trash and construction related solid wastes must be deposited into a covered receptacle to prevent contamination of rainwater and dispersal by wind.
- Sediments and other materials may not be tracked from the site by vehicle traffic. The construction entrance roadways must be stabilized so as to inhibit sediments from being deposited into the public way. Accidental depositions must be swept up immediately and may not be washed down by rain or other means.
- Any slopes with disturbed soils or denuded of vegetation must be stabiiized so as to inhibit erosion by wind and water.

"I certify that this document and all attachments were prepared under my direction or supervision in accordance with a system designed to ensure that qualified personnel properly gather and evaluate the information submitted. Based on my inquiry of the person or persons who manage the system or those persons directly responsible for gathering the information, to the best of my knowledge and belief, the information submitted is true, accurate, and complete. I am aware that submitting false and/or inaccurate information, failing to update the ESCP to reflect current conditions, or failing to properly and/or adequately implement the ESCP may result in revocation of grading and/or other permits or other sanctions provided by law."

Print Name GUILLERMO PALAFOX
(Owner or authorized agent of the owner)

Signature _____ Date 3-19-24
(Owner or authorized agent of the owner)

*The above Best Management Practices are detailed in the latest edition of the California BMP Handbook or Caltrans Stormwater Quality Handbooks

REVISIONS	BY

Plans drawn by:
G P. FOX DRAFTING INC.
RESIDENTIAL DRAFTING
8050 E. FLORENCE AVE, SUITE.27
DOWNEY, CA 90240
(562) 928-5467
email: gpfoxdesign@verizon.net

GENERAL NOTES

1. VERIFY MEASUREMENTS WITH CORRESPONDING CONSTRUCTED OR EXISTING CONDITIONS PRIOR TO PROCEEDING WITH THE WORK, AND NOTIFY THE ARCHITECT IMMEDIATELY OF SIGNIFICANT DISCREPANCIES.
2. FINISH ELEVATIONS REFERENCED ON ARCHITECTURAL DRAWINGS ARE DATUM ELEVATIONS ABOVE THE FINISH FLOOR ELEVATION. THE CONTRACTOR MUST COORDINATE DATUM-BASED ARCHITECTURAL ELEVATIONS SHOWN WITH SITE-SPECIFIC ELEVATIONS SHOWN ON CIVIL DRAWINGS.
3. WALL DIMENSIONS SHOWN ARE TO FACE OF WALL FINISH UNLESS SPECIFICALLY NOTED OTHERWISE.

Project:
PROPOSED
NEW 2-STORY S.F.D.
AND AN ADU

Sheet Title:
L.A. COUNTY GENERA NOTES

Project for:
SALVADOR POLINA

Project:
Address:
13828, 13828 1/2 CREWE ST
WHITTIER , CA.90605

Checked	G.P.
Job no.	
Drawn	DN
Date	03/19/2024

SHEET:
GN
OF SHEETS

GRADING AND DRAINAGE PLAN

GENERAL NOTES

1. ALL GRADING AND CONSTRUCTION SHALL CONFORM TO THE 2020 COUNTY OF LOS ANGELES BUILDING CODES AND THE STATE MODEL WATER EFFICIENCY LANDSCAPE ORDINANCE UNLESS SPECIFICALLY NOTED ON THESE PLANS.
2. ANY MODIFICATIONS OF OR CHANGES TO APPROVED GRADING PLANS MUST BE APPROVED BY THE BUILDING OFFICIAL.
3. NO GRADING SHALL BE STARTED WITHOUT FIRST NOTIFYING THE BUILDING OFFICIAL. A PRE-GRADING MEETING AT THE SITE IS REQUIRED BEFORE THE START OF THE GRADING WITH THE FOLLOWING PEOPLE PRESENT: OWNER, GRADING CONTRACTOR, DESIGN CIVIL ENGINEER, SOILS ENGINEER, GEOLOGIST, COUNTY GRADING INSPECTOR(S) OR THEIR REPRESENTATIVES, AND WHEN REQUIRED THE ARCHEOLOGIST OR OTHER JURISDICTIONAL AGENCIES. PERMITTEE OR HIS AGENT ARE RESPONSIBLE FOR ARRANGING PRE-GRADE MEETING AND MUST NOTIFY THE BUILDING OFFICIAL AT LEAST TWO BUSINESS DAYS PRIOR TO PROPOSED PRE-GRADE MEETING.
4. APPROVAL OF THESE PLANS REFLECT SOLELY THE REVIEW OF PLANS IN ACCORDANCE WITH THE COUNTY OF LOS ANGELES BUILDING CODES AND DOES NOT REFLECT ANY POSITION BY THE COUNTY OF LOS ANGELES OR THE DEPARTMENT OF PUBLIC WORKS REGARDING THE STATUS OF ANY TITLE ISSUES RELATING TO THE LAND ON WHICH THE IMPROVEMENTS MAY BE CONSTRUCTED. ANY DISPUTES RELATING TO TITLE ARE SOLELY A PRIVATE MATTER NOT INVOLVING THE COUNTY OF LOS ANGELES OR THE DEPARTMENT OF PUBLIC WORKS.
5. ALL GRADING AND CONSTRUCTION ACTIVITIES SHALL COMPLY WITH COUNTY OF LOS ANGELES CODE, TITLE 12, SECTION 12.12.030 THAT CONTROLS AND RESTRICTS NOISE FROM THE USE OF CONSTRUCTION AND GRADING EQUIPMENT FROM THE HOURS OF 8:00 PM TO 6:30 AM, AND ON SUNDAYS AND HOLIDAYS. (MORE RESTRICTIVE CONSTRUCTION ACTIVITY TIMES MAY GOVERN, AS REQUIRED BY THE DEPARTMENT OF REGIONAL PLANNING AND SHOULD BE SHOWN ON THE GRADING PLANS WHEN APPLICABLE.)
6. CALIFORNIA PUBLIC RESOURCES CODE (SECTION 5097.98) AND HEALTH AND SAFETY CODE (SECTION 7050.5) ADDRESS THE DISCOVERY AND DISPOSITION OF HUMAN REMAINS. IN THE EVENT OF DISCOVERY OR RECOGNITION OF ANY HUMAN REMAINS IN ANY LOCATION OTHER THAN A DEDICATED CEMETERY, THE LAW REQUIRES THAT GRADING IMMEDIATELY STOPS AND NO FURTHER EXCAVATION OR DISTURBANCE OF THE SITE, OR ANY NEARBY AREA WHERE HUMAN REMAINS MAY BE LOCATED, OCCUR UNTIL THE FOLLOWING HAS BEEN MEASURES HAVE BEEN TAKEN:
   A. THE COUNTY CORONER HAS BEEN INFORMED AND HAS DETERMINED THAT NO INVESTIGATION OF THE CAUSE OF DEATH IS REQUIRED, AND
   B. IF THE REMAINS ARE OF NATIVE AMERICAN ORIGIN, THE DESCENDANTS FROM THE DECEASED NATIVE AMERICANS HAVE MADE A RECOMMENDATION FOR THE MEANS OF TREATING OR DISPOSING, WITH APPROPRIATE DIGNITY, OF THE HUMAN REMAINS AND ANY ASSOCIATED GRAVE GOODS.
7. THE LOCATION AND PROTECTION OF ALL UTILITIES IS THE RESPONSIBILITY OF THE PERMITTEE.
8. ALL EXPORT OF MATERIAL FROM THE SITE MUST GO TO A PERMITTED SITE APPROVED BY THE BUILDING OFFICIAL OR A LEGAL DUMPSITE. RECEIPTS FOR ACCEPTANCE OF EXCESS MATERIAL BY A DUMPSITE ARE REQUIRED AND MUST BE PROVIDED TO THE BUILDING OFFICIAL UPON REQUEST.
9. A COPY OF THE GRADING PERMIT AND APPROVED GRADING PLANS MUST BE IN THE POSSESSION OF A RESPONSIBLE PERSON AND AVAILABLE AT THE SITE AT ALL TIMES.
10. SITE BOUNDARIES, EASEMENTS, DRAINAGE DEVICES, RESTRICTED USE AREAS SHALL BE LOCATED PER CONSTRUCTION STAKING BY FIELD ENGINEER OR LICENSED SURVEYOR. PRIOR TO GRADING, AS REQUESTED BY THE BUILDING OFFICIAL, ALL PROPERTY LINES, EASEMENTS, AND RESTRICTED USE AREAS SHALL BE STAKED.
11. NO GRADING OR CONSTRUCTION SHALL OCCUR WITHIN THE PROTECTED ZONE OF ANY OAK TREE AS REQUIRED PER TITLE CHAPTER 22.56 OF THE COUNTY OF LOS ANGELES ZONING CODE. THE PROTECTED ZONE SHALL MEAN THAT AREA WITHIN THE DRIP LINE OF AN OAK TREE EXTENDING THERE FROM A POINT AT LEAST FIVE FEET OUTSIDE THE DRIP LINE, OR 15 FEET FROM THE TRUNK(S) OF A TREE, WHICHEVER IS GREATER.
12. THE STANDARD RETAINING WALL DETAILS SHOWN ON THE GRADING PLANS ARE FOR REFERENCE ONLY. STANDARD RETAINING WALLS ARE NOT CHECKED, PERMITTED, OR INSPECTED PER THE GRADING PERMIT. A SEPARATE RETAINING WALL PERMIT IS REQUIRED FOR ALL STANDARD RETAINING WALLS.

NOTE: THIS NOTE ONLY APPLIES TO STANDARD RETAINING WALLS. GEOGRID FABRIC AND SEGMENTAL RETAINING WALLS DO NOT REQUIRE A SEPARATE RETAINING WALL PERMIT. DETAILS AND CONSTRUCTION NOTES FOR ALL GEOGRID WALLS MUST BE ON THE GRADING PLAN.

13. A PREVENTIVE PROGRAM TO PROTECT THE SLOPES FROM POTENTIAL DAMAGE FROM BURROWING RODENTS IS REQUIRED PER SECTION J101.8 OF THE COUNTY OF LOS ANGELES BUILDING CODE. OWNER IS TO INSPECT SLOPES PERIODICALLY FOR EVIDENCE OF BURROWING RODENTS AND A FIRST EVIDENCE OF THEIR EXISTENCE SHALL EMPLOY AN EXTERMINATOR FOR THEIR REMOVAL.
14. WHERE A GRADING PERMIT IS ISSUED AND THE BUILDING OFFICIAL DETERMINES THAT THE GRADING WILL NOT BE COMPLETED PRIOR TO NOVEMBER 1, THE OWNER OF THE SITE ON WHICH THE GRADING IS BEING PERFORMED SHALL, ON OR BEFORE OCTOBER 1, FILE OR CAUSE TO BE FILED WITH THE BUILDING OFFICIAL AN ESCP PER SECTION J110.8.3 OF THE COUNTY OF LOS ANGELES BUILDING CODE.
15. TRANSFER OF RESPONSIBILITY: IF THE FIELD ENGINEER, THE SOILS ENGINEER, OR THE ENGINEERING GEOLOGIST OF RECORD IS CHANGED DURING GRADING, THE WORK SHALL BE STOPPED UNTIL THE REPLACEMENT HAS AGREED IN WRITING TO ACCEPT THEIR RESPONSIBILITY WITHIN THE AREA OF TECHNICAL COMPETENCE FOR APPROVAL UPON COMPLETION OF THE WORK. IT SHALL BE THE DUTY OF THE PERMITTEE TO NOTIFY THE BUILDING OFFICIAL IN WRITING OF SUCH CHANGE PRIOR TO THE RECOMMENCEMENT OF SUCH GRADING.

INSPECTION NOTES

16. THE PERMITTEE OR HIS AGENT SHALL NOTIFY THE BUILDING OFFICIAL AT LEAST ONE WORKING DAY IN ADVANCE OF REQUIRED INSPECTIONS AT FOLLOWING STAGES OF THE WORK. (SECTION J105.7 OF THE BUILDING CODE.)
   (A) PRE-GRADE – BEFORE THE START OF ANY EARTH DISTURBING ACTIVITY OR CONSTRUCTION.
   (B) INITIAL – WHEN THE SITE HAS BEEN CLEARED OF VEGETATION AND UNAPPROVED FILL HAS BEEN SCARIFIED, BENCHED OR OTHERWISE PREPARED FOR FILL. FILL SHALL NOT BE PLACED PRIOR TO THIS INSPECTION. NOTE: PRIOR TO ANY CONSTRUCTION ACTIVITIES, INCLUDING GRADING, ALL STORM WATER POLLUTION PREVENTION MEASURES INCLUDING EROSION CONTROL DEVICES WHICH CONTAIN SEDIMENTS MUST BE INSTALLED.
   (C) ROUGH – WHEN APPROXIMATE FINAL ELEVATIONS HAVE BEEN ESTABLISHED; DRAINAGE TERRACES, SWALES AND BERMS INSTALLED AT THE TOP OF THE SLOPE; AND THE STATEMENTS REQUIRED IN THIS SECTION HAVE BEEN RECEIVED.
   (D) FINAL – WHEN GRADING HAS BEEN COMPLETED; ALL DRAINAGE DEVICES INSTALLED; SLOPE PLANTING ESTABLISHED, IRRIGATION SYSTEMS INSTALLED AND THE AS-BUILT PLANS, REQUIRED STATEMENTS, AND REPORTS HAVE BEEN SUBMITTED AND APPROVED.
17. IN ADDITION TO THE INSPECTION REQUIRED BY THE BUILDING OFFICIAL FOR GRADING, REPORTS AND STATEMENTS SHALL BE SUBMITTED TO THE BUILDING OFFICIAL IN ACCORDANCE WITH SECTION J105 OF THE COUNTY OF LOS ANGELES BUILDING CODE.
18. UNLESS OTHERWISE DIRECTED BY THE BUILDING OFFICIAL, THE FIELD ENGINEER FOR ALL ENGINEERED GRADING PROJECTS SHALL PREPARE ROUTINE INSPECTION REPORTS AS REQUIRED UNDER SECTION J105.11 OF THE COUNTY OF LOS ANGELES BUILDING CODE. THESE REPORTS, KNOWN AS 'REPORT OF GRADING ACTIVITIES', SHALL BE SUBMITTED TO THE BUILDING OFFICIAL AS FOLLOWS:
   1. BI-WEEKLY DURING ALL TIMES WHEN GRADING OF 400 CUBIC YARDS OR MORE PER WEEK IS OCCURRING ON THE SITE;
   2. MONTHLY, AT ALL OTHER TIMES; AND
   3. AT ANY TIME WHEN REQUESTED IN WRITING BY THE BUILDING OFFICIAL.

   SUCH 'REPORT OF GRADING ACTIVITIES' SHALL CERTIFY TO THE BUILDING OFFICIAL THAT THE FIELD ENGINEER HAS INSPECTED THE GRADING SITE AND RELATED ACTIVITIES AND HAS FOUND THEM IN COMPLIANCE WITH THE APPROVED GRADING PLANS AND SPECIFICATIONS, THE BUILDING CODE, ALL GRADING PERMIT CONDITIONS, AND ALL OTHER APPLICABLE ORDINANCES AND REQUIREMENTS. THIS FORM IS AVAILABLE AT THE FOLLOWING WEBSITE HTTP://DPW.LACOUNTY.GOV/BSD/DG/DEFAULT.ASPX. 'REPORT OF GRADING ACTIVITIES' MAY BE SCANNED AND UPLOADED AT THE WEBSITE OR FAXED TO (310) 530-5482. FAILURE TO PROVIDE REQUIRED INSPECTION REPORTS WILL RESULT IN A 'STOP WORK ORDER.'
19. ALL GRADED SITES MUST HAVE DRAINAGE SWALES, BERMS, AND OTHER DRAINAGE DEVICES INSTALLED PRIOR TO ROUGH GRADING APPROVAL PER SECTION J105.7 OF THE COUNTY OF LOS ANGELES BUILDING CODE.
20. THE GRADING CONTRACTOR SHALL SUBMIT THE STATEMENT TO THE GRADING INSPECTOR AS REQUIRED BY SECTION J105.12 OF THE COUNTY OF LOS ANGELES BUILDING CODE AT THE COMPLETION OF ROUGH GRADING.
21. FINAL GRADING MUST BE APPROVED BEFORE OCCUPANCY OF BUILDINGS WILL BE ALLOWED PER SECTION J105 OF THE COUNTY OF LOS ANGELES BUILDING CODE.

DRAINAGE NOTES

22. ROOF DRAINAGE MUST BE DIVERTED FROM GRADED SLOPES.
23. PROVISIONS SHALL BE MADE FOR CONTRIBUTORY DRAINAGE AT ALL TIMES.
24. ALL CONSTRUCTION AND GRADING WITHIN A STORM DRAIN EASEMENT ARE TO BE DONE PER PRIVATE DRAIN PD NO._____ OR MISCELLANEOUS TRANSFER DRAIN MTD NO._____
25. ALL STORM DRAIN WORK IS TO BE DONE UNDER CONTINUOUS INSPECTION BY THE FIELD ENGINEER. STATUS REPORTS REQUIRED UNDER NOTE 18 AND SECTION J105.11 OF THE COUNTY OF LOS ANGELES BUILDING CODE SHALL INCLUDE INSPECTION INFORMATION AND REPORTS ON THE STORM DRAIN INSTALLATION.

AGENCY NOTES

26. AN ENCROACHMENT PERMIT FROM (COUNTY OF LOS ANGELES DEPARTMENT OF PUBLIC WORKS) (CALTRANS) (CITY OF _____) IS REQUIRED FOR ALL WORK WITHIN OR AFFECTING ROAD RIGHT OF WAY. ALL WORK WITHIN ROAD RIGHT OF WAY SHALL CONFORM TO (COUNTY OF LOS ANGELES DEPARTMENT OF PUBLIC WORKS)(CALTRANS) (CITY OF _____) ENCROACHMENT PERMIT.

GENERAL GEOTECHNICAL NOTES

27. ALL WORK MUST BE IN COMPLIANCE WITH THE RECOMMENDATIONS INCLUDED IN THE GEOTECHNICAL CONSULTANT'S REPORT(S) AND THE APPROVED GRADING PLANS AND SPECIFICATIONS.
28. GRADING OPERATIONS MUST BE CONDUCTED UNDER PERIODIC INSPECTIONS BY THE GEOTECHNICAL CONSULTANTS WITH MONTHLY INSPECTION REPORTS TO BE SUBMITTED TO THE GEOLOGY AND SOILS SECTION. (900 S. FREMONT, ALHAMBRA CA 91803 – 3RD FLOOR)
29. THE SOIL ENGINEER SHALL PROVIDE SUFFICIENT INSPECTIONS DURING THE PREPARATION OF THE NATURAL GROUND AND THE PLACEMENT AND COMPACTION OF THE FILL TO BE SATISFIED THAT THE WORK IS BEING PERFORMED IN ACCORDANCE WITH THE PLAN AND APPLICABLE CODE REQUIREMENTS.
30 .ROUGH GRADING MUST BE APPROVED BY A FINAL ENGINEERING GEOLOGY AND SOILS ENGINEERING REPORT. AN AS-BUILT GEOLOGIC MAP MUST BE INCLUDED IN THE FINAL GEOLOGY REPORT. PROVIDE A FINAL REPORT STATEMENT THAT VERIFIES WORK WAS DONE IN ACCORDANCE WITH REPORT RECOMMENDATIONS AND CODE PROVISIONS (SECTION J105.12 OF THE COUNTY OF LOS ANGELES BUILDING CODE). THE FINAL REPORT(S) MUST BE SUBMITTED TO THE GEOTECHNICAL AND MATERIALS ENGINEERING DIVISION FOR REVIEW AND APPROVAL.
31. FOUNDATION, WALL AND POOL EXCAVATIONS MUST BE INSPECTED AND APPROVED BY THE CONSULTING GEOLOGIST AND SOIL ENGINEER, PRIOR TO THE PLACING OF STEEL OR CONCRETE.
32. BUILDING PADS LOCATED IN CUT/FILL TRANSITION AREAS SHALL BE OVER-EXCAVATED A MINIMUM OF THREE (3) FEET BELOW THE PROPOSED BOTTOM OF FOOTING.

FILL NOTES

33. ALL FILL SHALL BE COMPACTED TO THE FOLLOWING MINIMUM RELATIVE COMPACTION CRITERIA:
   A. 90 PERCENT OF MAXIMUM DRY DENSITY WITHIN 40 FEET BELOW FINISH GRADE.
   B. 93 PERCENT OF MAXIMUM DRY DENSITY DEEPER THAN 40 FEET BELOW FINISH GRADE, UNLESS A LOWER RELATIVE COMPACTION (NOT LESS THAN 90 PERCENT OF MAXIMUM DRY DENSITY) IS JUSTIFIED BY THE GEOTECHNICAL ENGINEER.

   THE RELATIVE COMPACTION SHALL BE DETERMINED BY A.S.T.M. SOIL COMPACTION TEST D1557-91 WHERE APPLICABLE: WHERE NOT APPLICABLE, A TEST ACCEPTABLE TO THE BUILDING OFFICIAL SHALL BE USED. (SECTION J107.5 OF THE COUNTY OF LOS ANGELES BUILDING CODE.)
   C. 95 PERCENT OF MAXIMUM DRY DENSITY IS REQUIRED FOR ALL FIRE LANES UNLESS OTHERWISE APPROVED BY THE FIRE DEPARTMENT.
34. FIELD DENSITY SHALL BE DETERMINED BY A METHOD ACCEPTABLE TO THE BUILDING OFFICIAL. (SECTION J107.5 OF THE COUNTY OF LOS ANGELES BUILDING CODE.) HOWEVER, NOT LESS THAN 10% OF THE REQUIRED DENSITY TEST, UNIFORMLY DISTRIBUTED, AND SHALL BE OBTAINED BY THE SAND CONE METHOD.
35. SUFFICIENT TESTS OF THE FILL SOILS SHALL BE MADE TO DETERMINE THE RELATIVE COMPACTION OF THE FILL IN ACCORDANCE WITH THE FOLLOWING MINIMUM GUIDELINES:
   A. ONE TEST FOR EACH TWO-FOOT VERTICAL LIFT.
   B. ONE TEST FOR EACH 1,000 CUBIC YARDS OF MATERIAL PLACED.
   C. ONE TEST AT THE LOCATION OF THE FINAL FILL SLOPE FOR EACH BUILDING SITE (LOT) IN EACH FOUR-FOOT VERTICAL LIFT OR PORTION THEREOF.
   D. ONE TEST IN THE VICINITY OF EACH BUILDING PAD FOR EACH FOUR-FOOT VERTICAL LIFT OR PORTION THEREOF.
36. SUFFICIENT TESTS OF FILL SOILS SHALL BE MADE TO VERIFY THAT THE SOIL PROPERTIES COMPLY WITH THE DESIGN REQUIREMENTS, AS DETERMINED BY THE SOIL ENGINEER INCLUDING SOIL TYPES, SHEAR STRENGTHS PARAMETERS AND CORRESPONDING UNIT WEIGHTS IN ACCORDANCE WITH THE FOLLOWING GUIDELINES:
   A. PRIOR AND SUBSEQUENT TO PLACEMENT OF THE FILL, SHEAR TESTS SHALL BE TAKEN ON EACH TYPE OF SOIL OR SOIL MIXTURE TO BE USED FOR ALL FILL SLOPES STEEPER THAN THREE (3) HORIZONTAL TO ONE VERTICAL.
   B. SHEAR TEST RESULTS FOR THE PROPOSED FILL MATERIAL MUST MEET OR EXCEED THE DESIGN VALUES USED IN THE GEOTECHNICAL REPORT TO DETERMINE SLOPE STABILITY REQUIREMENTS. OTHERWISE, THE SLOPE MUST BE REEVALUATED USING THE ACTUAL SHEAR TEST VALUE OF THE FILL MATERIAL THAT IS IN PLACE.
   C. FILL SOILS SHALL BE FREE OF DELETERIOUS MATERIALS.
37. FILL SHALL NOT BE PLACED UNTIL STRIPPING OF VEGETATION, REMOVAL OF UNSUITABLE SOILS, AND INSTALLATION OF SUBDRAIN (IF ANY) HAVE BEEN INSPECTED AND APPROVED BY THE SOIL ENGINEER. THE BUILDING OFFICIAL MAY REQUIRE A 'STANDARD TEST' METHOD FOR MOISTURE, ASH, ORGANIC MATTER, PEAT OR OTHER ORGANIC SOILS' ASTM D-2974-87 ON ANY SUSPECT MATERIAL. DETRIMENTAL AMOUNTS OF ORGANIC MATERIAL SHALL NOT BE PERMITTED IN FILLS. SOIL CONTAINING SMALL AMOUNTS OF ROOTS MAY BE ALLOWED PROVIDED THAT THE ROOTS ARE IN A QUANTITY AND DISTRIBUTED IN A MANNER THAT WILL NOT BE DETRIMENTAL TO THE FUTURE USE OF THE SITE AND THE SOILS ENGINEER APPROVES THE USE OF SUCH MATERIAL.
38. ROCK OR SIMILAR MATERIAL GREATER THAN 12 INCHES IN DIAMETER SHALL NOT BE PLACED IN THE FILL UNLESS RECOMMENDATIONS FOR SUCH PLACEMENT HAVE BEEN SUBMITTED BY THE SOIL ENGINEER AND APPROVED IN ADVANCE BY THE BUILDING OFFICIAL. LOCATION, EXTENT, AND ELEVATION OF ROCK DISPOSAL AREAS MUST BE SHOWN ON AN 'AS BUILT' GRADING PLAN.
39. CONTINUOUS INSPECTION BY THE SOIL ENGINEER, OR A RESPONSIBLE REPRESENTATIVE, SHALL BE PROVIDED DURING ALL FILL PLACEMENT AND COMPACTION OPERATIONS WHERE FILLS HAVE A DEPTH GREATER THAN 30 FEET OR SLOPE SURFACE STEEPER THAN 2:1. (SECTION J107.8 OF THE COUNTY OF LOS ANGELES BUILDING CODE)
40. CONTINUOUS INSPECTION BY THE SOIL ENGINEER, OR A RESPONSIBLE REPRESENTATIVE, SHALL BE PROVIDED DURING ALL SUBDRAIN INSTALLATION. (SECTION J107.2 OF THE COUNTY OF LOS ANGELES BUILDING CODE)
41. ALL SUBDRAIN OUTLETS ARE TO BE SURVEYED FOR LINE AND ELEVATION. SUBDRAIN INFORMATION MUST BE SHOWN ON AN 'AS BUILT' GRADING PLAN.
42. FILL SLOPES IN EXCESS OF 2:1 STEEPNESS RATIO ARE TO BE CONSTRUCTED BY THE PLACEMENT OF SOIL AT SUFFICIENT DISTANCE BEYOND THE PROPOSED FINISH SLOPE TO ALLOW COMPACTION EQUIPMENT TO BE OPERATED AT THE OUTER LIMITS OF THE FINAL SLOPE SURFACE. THE EXCESS FILL IS TO BE REMOVED PRIOR TO COMPLETION OF ROUGH GRADING. OTHER CONSTRUCTION PROCEDURES MAY BE USED WHEN IT IS DEMONSTRATED TO THE SATISFACTION OF THE BUILDING OFFICIAL THAT THE ANGLE OF SLOPE, CONSTRUCTION METHOD AND OTHER FACTORS WILL HAVE EQUIVALENT EFFECT. (SECTION J107.5 OF THE COUNTY OF LOS ANGELES BUILDING CODE.)

ENGINEERED GRADING REQUIREMENT

FIELD DENSITY SHALL BE DETERMINED BY SAND-CONE METHOD, A.S.T.M. D1556-LATEST VERSION. IN FINE-GRAINED COHESIVE SOILS FIELD DENSITY MAY BE DETERMINED BY THE DRIVE-CYLINDER METHOD, A.S.T.M. D-2937-LATEST VERSION, PROVIDED NOT LESS THAN 20% OF THE OF THE REQUIRED DENSITY TESTS, UNIFORMLY DISTRIBUTED, ARE BY THE SAND-DONE METHOD. THE METHOD OF DETERMINING FIELD DENSITY SHALL BE SHOWN IN THE COMPACTION REPORT. OTHER METHODS MAY BE USED IF RECOMMENDED BY THE SOILS ENGINEER AND APPROVED IN ADVANCE BY THE BUILDING OFFICIAL.

ESTIMATED PROJECT START DATE: 02/07/2022
ESTIMATED PROJECT COMPLETION DATE: 02/07/2023

ENGINEER'S SURVEYOR'S STATEMENT REGARDING THE PRESENCE OF MONUMENTS WITHIN PROJECT LIMITS

I HEREBY ATTEST THAT I HAVE LOCATED AND REFERENCED ON THESE PLANS THE MONUMENTS EXISTING PRIOR TO CONSTRUCTION TO ENSURE PERPETUATION OF THEIR LOCATION IN ACCORDANCE WITH SECTION 8771 OF THE BUSINESS AND PROFESSIONS CODE. I FURTHER ATTEST THAT I HAVE PERFORMED A RECORD SEARCH AND FIELD INSPECTION TO IDENTIFY EXISTING MONUMENTS, SHALL SET SUFFICIENT CONTROLLING, WITNESS, AND PERMENANT MONUMENTS, AND SHALL FILE THE REQUISITE CORNER RECORD OR RECORD OF SURVEY OF THE REFERENCES WITH THE COUNTY SURVEYOR.

ENGINEER/SURVEYOR SEAL & SIGNATURE — DATE 10/06/2021

LAND SURVEYOR — JACK C. LEE — EXP. 6-30-2022 — NO. 8407 — PROFESSIONAL — STATE OF CALIFORNIA

"AS CIVIL ENGINEER/LAND SURVEYOR OF THIS PROJECT, I HAVE IDENTIFIED THE LOCATION OF ALL EASEMENTS WHICH ARE DEPICTED ON THESE PLANS. I HAVE REVIEWED THE PROPOSED EASEMENT DOCUMENTS AND VERIFIED THE PROPOSED CONSTRUCTION DOES NOT CONFLICT OR INTERFERE WITH THE INTENDED EASEMENT USE."

CIVIL ENGINEER/LAND SURVEYOR (STAMP AND SIGNATURE) — DATE 10/06/2021

LAND SURVEYOR — JACK C. LEE — EXP. 6-30-2022 — NO. 8407 — PROFESSIONAL — STATE OF CALIFORNIA

PLANTING AND IRRIGATION NOTES:

43. PLANTING AND IRRIGATION ON GRADED SLOPES MUST COMPLY WITH THE FOLLOWING MINIMUM GUIDELINES:
   A. THE SURFACE OF ALL CUT SLOPES MORE THAN 5 FEET IN HEIGHT AND FILL SLOPES MORE THAN 3 FEET IN HEIGHT SHALL BE PROTECTED AGAINST DAMAGE BY EROSION BY PLANTING WITH GRASS OR GROUNDCOVER PLANTS. SLOPES EXCEEDING 15 FEET IN VERTICAL HEIGHT SHALL ALSO BE PLANTED WITH SHRUBS, SPACED AT NOT TO EXCEED 10 FEET ON CENTERS, OR TREES, SPACED AT NOT TO EXCEED 20 FEET ON CENTERS, OR A COMBINATION OF SHRUBS AND TREES AT EQUIVALENT SPACING, IN ADDITION TO THE GRASS OR GROUNDCOVER PLANTS. THE PLANTS SELECTED AND PLANTING METHODS USED SHALL BE SUITABLE FOR THE SOIL AND CLIMATIC CONDITIONS OF THE SITE. PLANT MATERIAL SHALL BE SELECTED WHICH WILL PRODUCE A COVERAGE OF PERMANENT PLANTING EFFECTIVELY CONTROLLING EROSION. CONSIDERATION SHALL BE GIVEN TO DEEP-ROOTED PLANTING MATERIAL NEEDING LIMITED WATERING, MAINTENANCE, HIGH ROOT TO SHOOT RATIO, WIND SUSCEPTIBILITY AND FIRE-RETARDANT CHARACTERISTICS. ALL PLANT MATERIALS MUST BE APPROVED BY THE BUILDING OFFICIAL. (SECTION J110.3 OF THE COUNTY OF LOS ANGELES BUILDING CODE)

   NOTE: PLANTING MAY BE MODIFIED FOR THE SITE IF SPECIFIC RECOMMENDATIONS ARE PROVIDED BY BOTH THE SOILS ENGINEER AND A LANDSCAPE ARCHITECT. SPECIFIC RECOMMENDATIONS MUST CONSIDER SOILS AND CLIMATIC CONDITIONS, IRRIGATION REQUIREMENTS, PLANTING METHODS, FIRE RETARDANT CHARACTERISTICS, WATER EFFICIENCY, MAINTENANCE NEEDS, AND OTHER REGULATORY REQUIREMENTS. RECOMMENDATIONS MUST INCLUDE A FINDING THAT THE ALTERNATIVE PLANTING WILL PROVIDE A PERMANENT AND EFFECTIVE METHOD OF EROSION CONTROL. MODIFICATIONS TO PLANTING MUST BE APPROVED BY THE BUILDING OFFICIAL PRIOR TO INSTALLATION.
   B. SLOPES REQUIRED TO BE PLANTED BY SECTION J110.3 SHALL BE PROVIDED WITH AN APPROVED SYSTEM OF IRRIGATION THAT IS DESIGNED TO COVER ALL PORTIONS OF THE SLOPE. IRRIGATION SYSTEM PLANS SHALL BE SUBMITTED AND APPROVED PRIOR TO INSTALLATION. A FUNCTIONAL TEST OF THE SYSTEM MAY BE REQUIRED. FOR SLOPES LESS THAN 20 FEET IN VERTICAL HEIGHT, HOSE BIBS TO PERMIT HAND WATERING WILL BE ACCEPTABLE IF SUCH HOSE BIBS ARE INSTALLED AT CONVENIENTLY ACCESSIBLE LOCATIONS WHERE A HOSE NO LONGER THAN 50 FEET IS NECESSARY FOR IRRIGATION. THE REQUIREMENTS FOR PERMANENT IRRIGATION SYSTEMS MAY BE MODIFIED UPON SPECIFIC RECOMMENDATION OF A LANDSCAPE ARCHITECT OR EQUIVALENT AUTHORITY THAT, BECAUSE OF THE TYPE OF PLANTS SELECTED, THE PLANTING METHODS USED AND THE SOIL AND CLIMATIC CONDITIONS AT THE SITE, IRRIGATION WILL NOT BE NECESSARY FOR THE MAINTENANCE OF THE SLOPE PLANTING. (SECTION J110.4 OF THE COUNTY OF LOS ANGELES BUILDING CODE)
   C. OTHER GOVERNMENTAL AGENCIES MAY HAVE ADDITIONAL REQUIREMENTS FOR LANDSCAPING AND IRRIGATION. IT IS THE RESPONSIBILITY OF THE APPLICANT TO COORDINATE WITH OTHER AGENCIES TO MEET THEIR REQUIREMENTS WHILE MAINTAINING COMPLIANCE WITH THE COUNTY OF LOS ANGELES BUILDING CODE.
44. THE PLANTING AND IRRIGATION SYSTEMS SHALL BE INSTALLED AS SOON AS PRACTICAL AFTER ROUGH GRADING. PRIOR TO FINAL GRADING APPROVAL ALL REQUIRED SLOPE PLANTING MUST BE WELL ESTABLISHED. (SECTION J110.7 OF THE COUNTY OF LOS ANGELES BUILDING CODE)
45. LANDSCAPE IRRIGATION SYSTEM SHALL BE DESIGNED AND MAINTAINED TO PREVENT SPRAY ON STRUCTURES. (TITLE 31, SECTION 5.407.2.1)
46. PRIOR TO ROUGH GRADE APPROVAL THIS PROJECT REQUIRES A LANDSCAPE PERMIT. LANDSCAPE PLANS IN COMPLIANCE WITH THE MODEL WATER EFFICIENT LANDSCAPE ORDINANCE TITLE 23, CHAPTER 2.7 OF CALIFORNIA CODE OF REGULATIONS (AB 1881) MUST BE SUBMITTED TO THE DEPARTMENT OF PUBLIC WORKS, LAND DEVELOPMENT DIVISION. (900 S. FREMONT AVE, ALHAMBRA – 3RD FLOOR, CA 91803 (626) 458-4921). TO OBTAIN LANDSCAPE PERMIT APPROVED PLANS AND WATER PURVEYOR ACKNOWLEDGMENT FORM MUST BE SUBMITTED TO THE LOCAL BUILDING AND SAFETY OFFICE.

BEST MANAGEMENT PRACTICE NOTES:

1. EVERY EFFORT SHOULD BE MADE TO ELIMINATE THE DISCHARGE OF NON STORMWATER FROM THE PROJECT SITE AT ALL TIMES.
2. ERODED SEDIMENTS AND OTHER POLLUTANTS MUST BE RETAINED ON-SITE AND MAY NOT BE TRANSPORTED FROM THE SITE VIA SHEET FLOW, SWALES, AREA DRAINS, NATURAL DRAINAGE COURSES OR WIND.
3. STOCKPILES OF EARTH AND OTHER CONSTRUCTION RELATED MATERIALS MUST BE PROTECTED FROM BEING TRANSPORTED FROM THE SITE BY THE FORCES OF WIND OR WATER.
4. FUELS, OILS, SOLVENTS, AND OTHER TOXIC MATERIALS MUST BE STORED IN ACCORDANCE WITH THEIR LISTING AND ARE NOT TO CONTAMINATE THE SOILS AND SURFACE WATERS. ALL APPROVED STORAGE CONTAINERS ARE TO BE PROTECTED FROM THE WEATHER. SPILLS MUST BE CLEANED UP IMMEDIATELY AND DISPOSED OF IN A PROPER MANNER. SPILLS MAY NOT BE WASHED INTO THE DRAINAGE SYSTEM.
5. EXCESS OR WASTE CONCRETE MAY NOT BE WASHED INTO THE PUBLIC WAY OR ANY OTHER DRAINAGE SYSTEM. PROVISIONS SHALL BE MADE TO RETAIN CONCRETE WASTES ON-SITE UNTILL THEY CAN BE DISPOSED OF AS SOLID WASTE.
6. TRASH AND CONSTRUCTION RELATED SOLID WASTES MUST BE DEPOSITED INTO A COVERED RECEPTABLE TO PREVENT CONTAMINATION OF RAINWATER AND DISPERSAL BY WIND.
7. SEDIMENTS AND OTHER MATERIALS MAY NOT BE TRACKED FROM THE SITE BY VEHICLE TRAFFIC. THE CONSTRUCTION ENTRANCE ROADWAYS MUST BE STABILIZED SO AS TO INHIBIT SEDIMENTS BEING DEPOSITED INTO THE PUBLIC WAY. ACCIDENTAL DEPOSITIONS MUST BE SWEPT UP IMMEDIATELY AND MAY NOT BE WASHED DOWN BY RAIN OR OTHER MEANS.
8. ANY SLOPES WITH DISTURBED SOILS OR DENUDED OF VEGETATION MUST BE STABILIZED SO AS TO INHIBIT EROSION BY WIND AND WATER.
9. "I CERTIFY THAT THIS DOCUMENT AND ALL ATTACHMENTS WERE PREPARED UNDER MY DIRECTION OR SUPERVISION IN ACCORDANCE WITH A SYSTEM DESIGNED TO ENSURE THAT QUALIFIED PERSONNEL PROPERLY GATHER AND EVALUATE THE INFORMATION SUBMITTED. BASED ON MY INQUIRY OF THE PERSON OR PERSONS WHO MANAGE THE SYSTEM OR THOSE PERSONS DIRECTLY RESPONSIBLE FOR GATHERING THE INFORMATION, TO THE BEST OF MY KNOWLEDGE AND BELIEF, THE INFORMATION SUBMITTED IS TRUE, ACCURATE, AND COMPLETE. I AM AWARE THAT SUBMITTING FALSE AND/OR INACCURATE INFORMATION, FAILING TO UPDATE THE ESCP TO REFLECT CURRENT CONDITIONS, OR FAILING TO PROPERLY AND/OR ADEQUATELY IMPLEMENT THE ESCP MAY RESULT IN REVOCATION OF GRADING AND/OR OTHER PERMITS OR OTHER SANCTIONS PROVIDED BY LAW."

PRINT NAME Salvador Polina (OWNER OR AUTHORIZED AGENT OF THE OWNER)
SIGNATURE _____ DATE 3-17-22 (OWNER OR AUTHORIZED AGENT OF THE OWNER)

THE FOLLOWING BMPS AS OULINED IN, BUT NOT LIMITED TO, THE LATEST EDITION OF CASQA CONSTRUCTION BMP ONLINE HANDBOOK OR CALTRANS STORMWATER QUALITY HANDBOOKS (CONSTRUCTION SITE BMP MANUAL), MAY APPLY DURING THE CONSTRUCTION OF THIS PROJECT (ADDITIONAL MEASURES MAY BE REQUIRED IF DEEMED APPROPRIATE BY THE PROJECT ENGINEER OF THE BUILDING OFFICIAL)

EROSION CONTROL
EC1 – SCHEDULING
EC2 – PRESERVATION OF EXISTING VEGETATION
EC3 – HYDRAULIC MULCH
EC4 – HYDROSEEDING
EC5 – SOIL BINDERS
EC6 – STRAW MULCH
EC7 – GEOTEXTILES & MATS
EC8 – WOOD MULCHING
EC9 – EARTH DIKES AND DRAINAGE SWALES
EC10 – VELOCITY DISSIPATION DEVICES
EC11 – SLOPE DRAINS
EC12

GRADING AND DRAINAGE PLAN

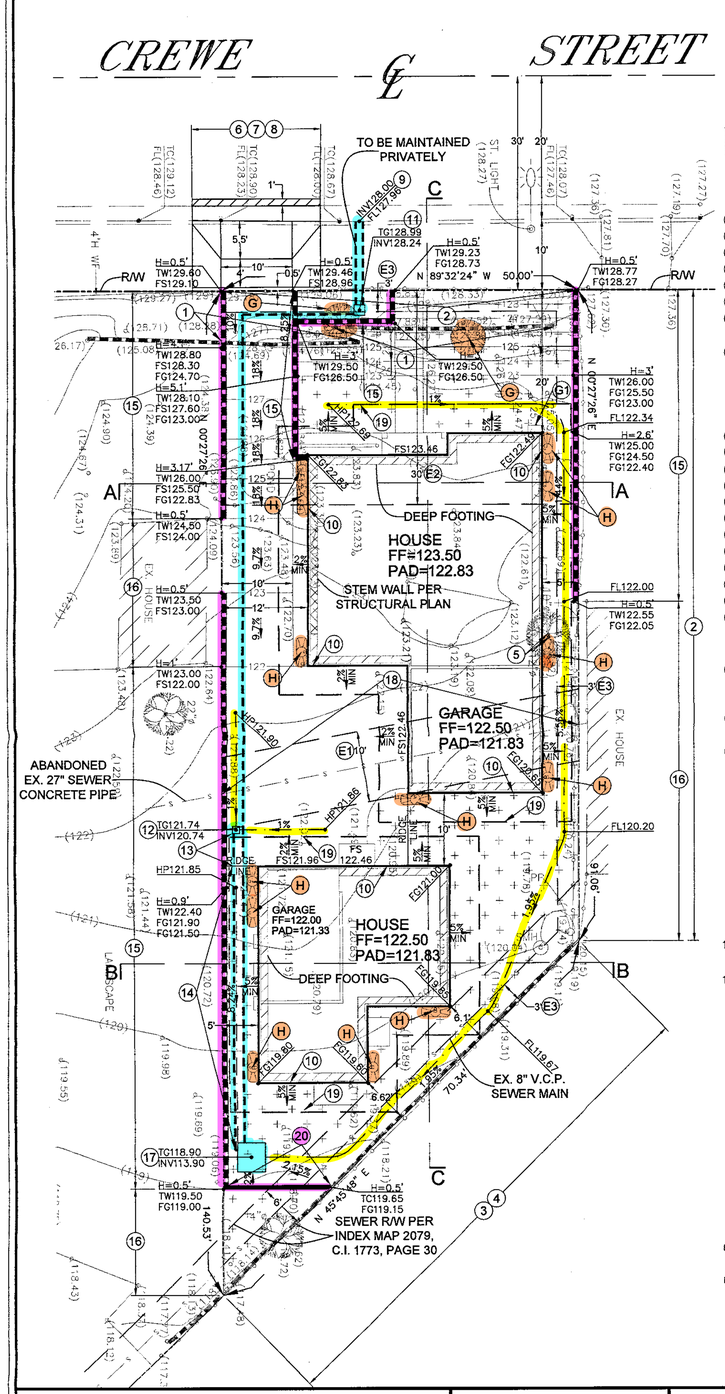

N

0 10 20

(IN FEET)
1 inch = 10 ft.

CONSTRUCTION NOTES:

1. EXISTING RETAINING WALL TO BE REMOVE
2. EXISTING FENCE TO BE REMOVE
3. EXISTING FENCE TO REMAIN
4. EXISTING WALL TO REMAIN
5. EXISTING TREE TO BE REMOVE
6. EXISTING CURB AND GUTTER TO BE REMOVE
7. CONSTRUCT NEW DRIVEWAY APPROACH PER SPPWC STD. NO. 110-2 TYPE B, X=4', Y=6', W=10', CF=8"
8. SAWCUT AND REMOVE EXISTING AC PAVEMENT AND CONSTRUCT ASPHALT CONCRETE PAVEMENT (C2-PG 64-10). MINIMUM DEPTH SHALL BE 4-INCHES (OR EXISTING ASPHALT CONCRETE PAVEMENT SECTION PLUS 1-INCH, WHICHEVER IS GREATER, OVER 8-INCH TRENCH BACKFILL SLURRY (270-E-500)
9. INSTALL 2-4" CURB DRAIN C.I. PIPE PER SPPWC STD. NO. 150-3
10. CONSTRUCT NEW BUILDING PER ARCHITECTURAL PLAN
11. CONSTRUCT 18" x 18" BOTTOMLESS CATCH BASIN PER DETAIL HEREON
12. CONSTRUCT 12" x 12" BOTTOMLESS CATCH BASIN PER DETAIL HEREON
13. INSTALL 4" PVC PIPE, SCH. 80 OR APPROVED EQUAL
14. INSTALL 4" PVC PIPE, SCH. 40 OR APPROVED EQUAL
15. CONSTRUCT NEW RETAINING WALL PER SEPARATE PERMIT
16. CONSTRUCT FENCE PER ARCHITECTURAL PLAN
17. INSTALL SUMP PUMP PER DETAIL HEREON
18. EXISTING ABANDONED 27" CONCRETE SEWER PIPE TO BE REMOVED
19. LIMIT OF OVER-EXCAVATION
20. PROPOSED 6" CURB PER DETAIL HEREON

EASEMENT NOTES:

- (E1) EASEMENT FOR PUBLIC UTILITIES PURPOSES PER BOOK 4698, PAGE 101, OF OFFICIAL RECORDS AND TRACT NO. 10451, M.B. 155-44-45 TO BE VACATED BY CITY OF WHITTIER
- (E2) EASEMENT FOR PUBLIC UTILITIES AND BUILDING SETBACK PURPOSES PER TRACT NO. 10451, M.B. 155-44-45.
- (E3) EASEMENT FOR PUBLIC UTILITIES PURPOSES PER INST. NO. 29795-O, RECORDED DEC. 9, 1946, OF OFFICIAL RECORDS.

a. PROVISIONS SHALL BE MADE FOR CONTRIBUTORY DRAINAGE AT ALL TIMES.

b. OWNER WILL MAINTAIN DRAINAGE DEVICES AND KEEP FREE OF DEBRIS.

c. AN EXCAVATION/ENCROACHMENT PERMIT IS REQUIRED FOR CONSTRUCTION AND/OR DISCHARGE OF DRAINAGE WITHIN PUBLIC ROAD R/W. (COUNTY OF LOS ANGELES CONSTRUCTION DIVISION, CALTRANS, CITY OF WHITTIER).

d. NO WORK IS ALLOWED WITHIN THE PROTECTED ZONE OF OAK TREE WITHOUT AN OAK TREE REPORT AND PERMIT.

e. FINISH FLOOR SHALL BE 8 INCHES MINIMUM ABOVE FINISH GRADE.

f. TOTAL PROPOSED LANDSCAPE AREA 499 SQUARE FEET.

g. TOTAL TURF AREA 0 % (PERCENT OF TOTAL PROPOSED LANDSCAPING)

h. TOTAL DROUGHT TOLERANT LANDSCAPING AREA 100 % (PERCENT OF TOTAL PROPOSED LANDSCAPING)

i. HYDROZONING IRRIGATION TECHNIQUES SHALL BE INCORPORATED INTO THE LANDSCAPE DESIGN.

j. THIS PROJECT REQUIRES A LANDSCAPER PERMIT. PRIOR TO FINAL, CERTIFICATION FROM A LICENSED LANDSCAPE ARCHITECT SHALL BE PROVIDED TO THE BUILDING OFFICIAL. FINAL CERTIFICATION, CAN BE OBTAINED AT THE FOLLOWING: <HTTP://DPW.LACOUNTY.GOV/BSD/PUBLICATIONS/INDEX.CFM>

I HAVE COMPLIED WITH THE CRITERIA OF MWELO AND APPLIED REQUIREMENTS ACCORDINGLY FOR THE EFFICIENT USE OF WATER IN THE GRADING DESIGN PLAN.

NAME AND SIGNED: _____

TITLE: _____

LOW IMPACT DEVELOPMENT CONSTRUCTION NOTES:

(G) TWO 15-GALLON TREES PLANTED MAXIMUM 10 FEET DISTANCE FROM IMPERVIOUS AREA. INSTALL SMART IRRIGATION CONTROLLERS. (DROUGHT TOLERANT TREES: PISTACIA CHINENSIS(CHINESE PISTACHE)

(G1) SMART IRRIGATION: RAIN BIRD ESP-SMT4 MANAGER WEATHER-SMART CONTROLLER, RAIN BIRD WRC

A. CONTROLLERS SHALL BE WEATHER OR SOIL MOISTURE BASED THAT AUTOMATICALLY ADJUST IRRIGATION IN RESPONSE TO CHANGES IN PLANTS' NEED AS WEATHER CONDITIONS CHANGE.

B. WEATHER BASED CONTROLLERS WITHOUT INTEGRAL RAIN SENSORS OR COMMUNICATION SYSTEMS THAT ACCOUNT FOR LOCAL RAINFALL SHALL HAVE A SEPARATE WIRED OR WIRELESS RAIN SENSOR WHICH CONNECTS OR COMMUNICATES WITH THE CONTROLLER(S). SOIL MOISTURE BASED CONTROLLERS ARE NOT REQUIRED TO HAVE RAIN SENSOR INPUT.

C. PROPER MAINTENANCE OF SMART IRRIGATION SYSTEM IS AN IMPORTANT PART OF AN EFFICIENT SYSTEM. ALL SYSTEMS SHOULD BE MAINTAINED PER MANUFACTURE'S SPECIFICATIONS.

(H) RAIN BARREL/CISTERNS: DOWNSPOUT ROUTING, INSTALL 13-130 GAL. BUSHMAN RAIN TANK

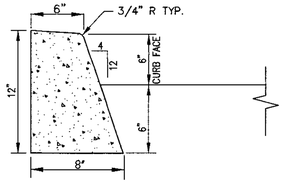

20 CONC. CURB ONLY
NTS

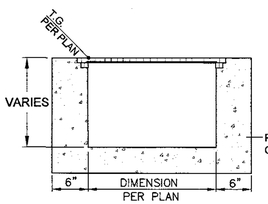

11 12 CATCH BASIN (TYP.)
NOT TO SCALE

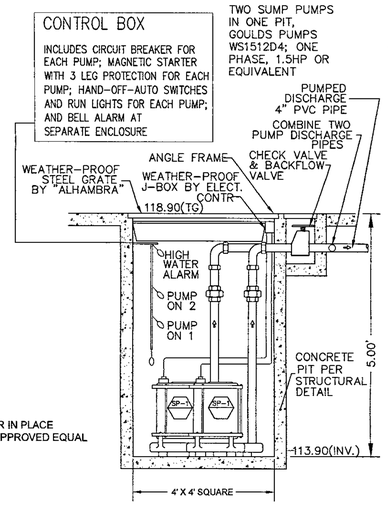

17 DUPLEX SUBMERSIBLE SUMP PUMP (RAINWATER)
NOT TO SCALE

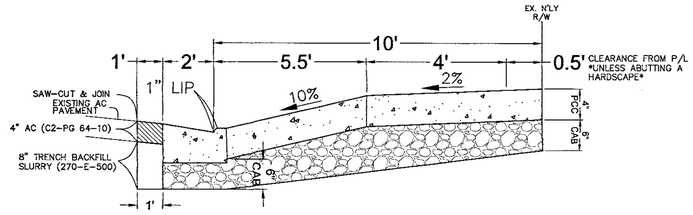

TYPICAL DRIVEWAY CROSS SECTION
SCALE: N.T.S.

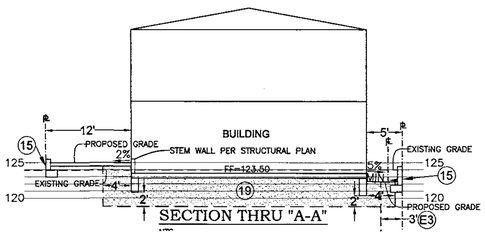

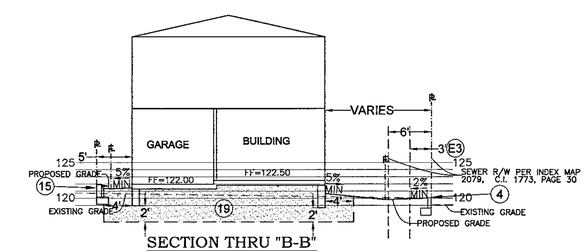

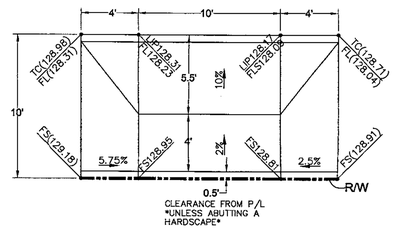

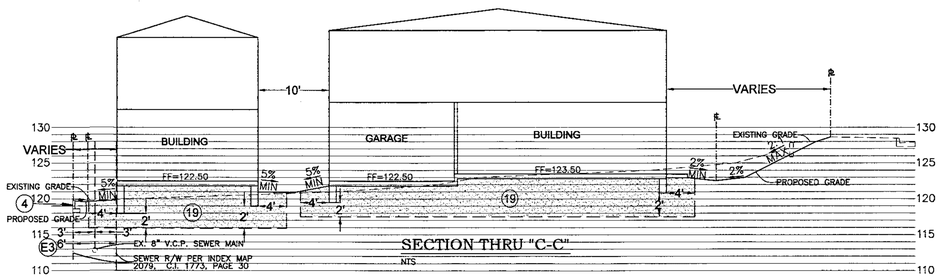

BUILDING AND SAFETY DIVISION
Department of Public Works
DRAINAGE & GRADING APPROVED UNDER LOS ANGELES COUNTY CODE TITLE 26
EAGUIRRE
PUBLIC WORKS
03/23/2022 11:51:28 AM
This set of plans and specifications must be kept at the job site at all times, and it is unlawful to make any changes, modifications or alterations to these plans or specifications without the prior written permission of the Building Official. The stamping of this set of plans and specifications SHALL NOT, under any circumstances, be deemed to permit or to be an approval of any work or activity that violates any provisions of any County Ordinance or State Law.

SURFICIAL SOIL REMOVALS

BASED ON OUR FIELD EXPLORATION AND LABORATORY DATA OBTAINED TO DATE, IT IS RECOMMENDED THAT THE EXISTING SURFICIAL SOILS BE REMOVED TO A MINIMUM DEPTH OF 4 FEET BELOW THE EXISTING GRADE OR TWO FEET BELOW THE BOTTOM OF THE FOOTING, WHICHEVER IS DEEPER. THE RECOMMENDED REMOVAL SHOULD BE EXTENDED AT LEAST 4 FEET BEYOND BUILDING LINES. THE EXISTING NEAR SURFACE SOILS SHOULD ALSO BE REMOVED TO A DEPTH OF ABOUT 18-INCHES WITHIN THE PROPOSED DRIVEWAY AND CONCRETE FLATWORK AREAS. LOCALLY DEEPER REMOVALS MAY BE NECESSARY TO EXPOSE COMPETENT NATURAL GROUND. THE ACTUAL REMOVAL DEPTHS SHOULD BE DETERMINED IN THE FIELD AS CONDITIONS ARE EXPOSED. VISUAL INSPECTION AND/OR TESTING MAY BE USED TO DEFINE REMOVAL REQUIREMENTS.

TREATMENT OF REMOVAL BOTTOMS

SOILS EXPOSED WITHIN AREAS APPROVED FOR FILL PLACEMENT SHOULD BE SCARIFIED TO A DEPTH OF 6 TO 10 INCHES, CONDITIONED TO NEAR OPTIMUM MOISTURE CONTENT, THEN COMPACTED IN-PLACE TO MINIMUM PROJECT STANDARDS.

STRUCTURAL BACKFILL

THE ONSITE SOILS MAY BE USED AS COMPACTED FILL PROVIDED THEY ARE FREE OF ORGANIC MATERIALS AND DEBRIS. FILLS SHOULD BE PLACED IN RELATIVELY THIN LIFTS (6 TO 8 INCHES), BROUGHT TO NEAR OPTIMUM MOISTURE CONTENT, AND THEN COMPACTED TO AT LEAST 90 PERCENT RELATIVE COMPACTION BASED ON LABORATORY STANDARD ASTM D-1557-12.

EARTH WORK QUANTITIES:

CUT: 63 CU.YD. IMPORT DIRT: 52 CU.YD.
FILL: 115 CU.YD.

NOTE:
THE YARDAGE SHOWN HEREON IS FOR PERMIT AND BONDING PURPOSES. THE CONTRACTOR SHALL BE RESPONSIBLE FOR VERIFYING OF THE QUANTITIES.

OWNER:

MR. SALVADOR POLINA
12531 PARAMOUNT BLVD, UNIT B,
DOWNEY, CA 90242
323-972-1988

BENCHMARK:

COUNTY BENCHMARK NO. EY11468

CS TAG IN W CB MEYER RD 6.5FT N/O BCR @ N END C.B. 44FT W/O C/L & 162FT N/O C/L LEFFINGWELL RD

ELEVATION: 112.102' (NAVD 1988)

LEGAL DESCRIPTION:

A PORTION OF LOT 87 OF TRACT NO. 10451, IN THE COUNTY OF LOS ANGELES, STATE OF CALIFORNIA, AS PER MAP RECORDED IN BOOK 155, PAGES 44 AND 45, OF MAPS, IN THE COUNTY RECORDER OFFICE OF SAID COUNTY.

APN: 8031-007-019

REFERENCE - Approved under a different Permit

JACK C. S. LEE
REGISTERED PROFESSIONAL ENGINEER
40870
Exp. 3-31-23
CIVIL
STATE OF CALIFORNIA

CALAND ENGINEERING, INC.
dba QUARTECH CONSULTANTS
576 E. LAMBERT ROAD, BREA, CA 92821
TEL: (714) 671-1050 FAX: (714) 671-1090

PROJECT LOCATION: APN: 8031-007-019
VACANT LOT (13828 CREWE ST.),
WHITTIER, CA 90605

GRAD210907000415

DRAWN: PS
CHECKED:
DATE: 01/03/2022
JOB. NO.: 21-022-026
SCALE: 1" = 10'
FILE NAME:

C-2

SHEET 2 OF 3

EROSION CONTROL PLAN

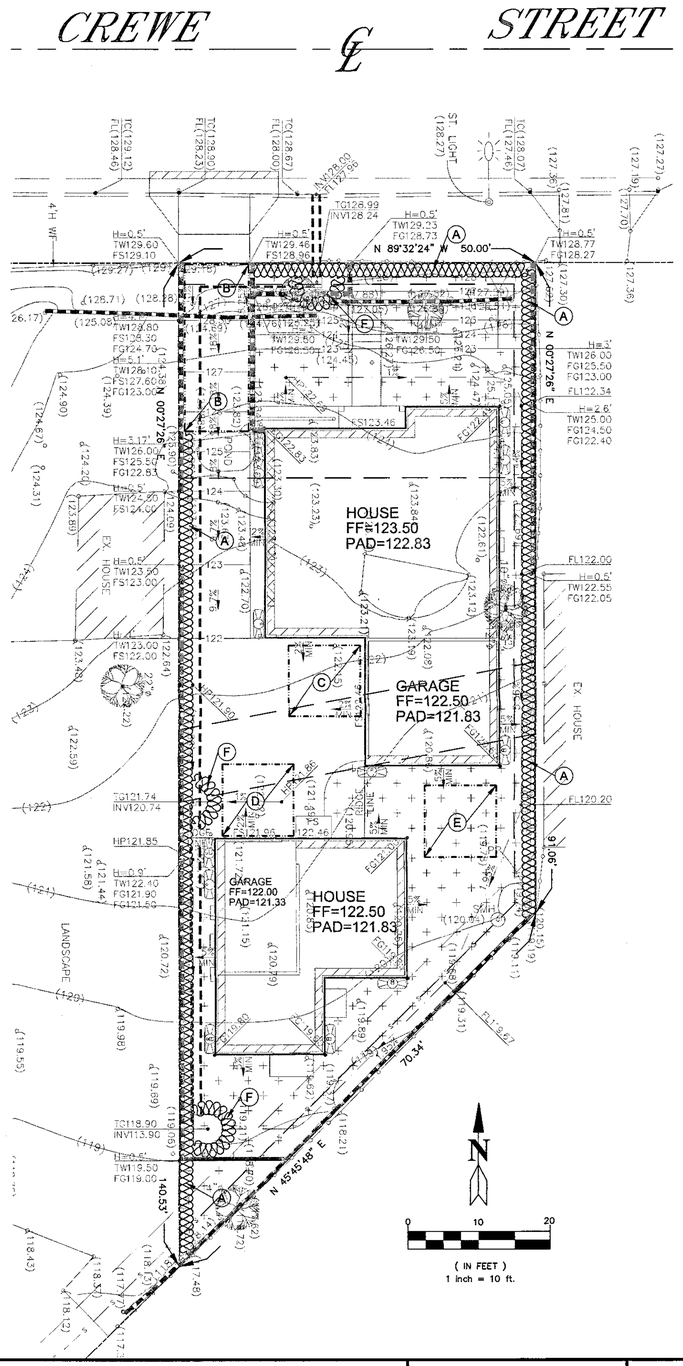

EROSION AND SEDIMENT CONTROL PLAN (ESCP) GENERAL NOTES:

1. IN CASE OF EMERGENCY, CALL MR. SALVADOR POLINA AT (323)-972-1988
2. TOTAL DISTURBED AREA 0.133 ACRE WDID # N/A

   RISK LEVEL 1 2 3 (CIRCLE ONE AS DETERMINED BY STATE GENERAL PERMIT FOR SITES GREATER THAN 1 ACRE)
3. A STAND-BY CREW FOR EMERGENCY WORK SHALL BE AVAILABLE AT ALL TIMES DURING THE RAINY SEASON (NOVEMBER 1 TO APRIL 15). NECESSARY MATERIALS SHALL BE AVAILABLE ON-SITE AND STOCKPILED AT CONVENIENT LOCATIONS TO FACILITATE RAPID CONSTRUCTION OF EMERGENCY DEVICES WHEN RAIN IS IMMINENT.
4. EROSION CONTROL DEVICES SHOWN ON THIS PLAN MAY BE REMOVED WHEN APPROVED BY THE BUILDING OFFICIAL IF THE GRADING OPERATION HAS PROGRESSED TO THE POINT WHERE THEY ARE NO LONGER REQUIRED.
5. GRADED AREAS ADJACENT TO FILL SLOPES LOCATED AT THE SITE PERIMETER MUST DRAIN AWAY FROM THE TOP OF SLOPE AT THE CONCLUSION OF EACH WORKING DAY. ALL LOOSE SOILS AND DEBRIS THAT MAY CREATE A POTENTIAL HAZARD TO OFF-SITE PROPERTY SHALL BE STABILIZED OR REMOVED FROM THE SITE ON A DAILY BASIS.
6. ALL SILT AND DEBRIS SHALL BE REMOVED FROM ALL DEVICES WITHIN 24 HOURS AFTER EACH RAINSTORM AND BE DISPOSED OF PROPERLY.
7. A GUARD SHALL BE POSTED ON THE SITE WHENEVER THE DEPTH OF WATER IN ANY DEVICE EXCEEDS TWO FEET. THE DEVICE SHALL BE DRAINED OR PUMPED DRY WITHIN 24 HOURS AFTER EACH RAINSTORM. PUMPING AND DRAINING OF ALL BASINS AND DRAINAGE DEVICES MUST COMPLY MUST COMPLY WITH THE APPROPRIATE BMP FOR DEWATERING OPERATIONS.
8. THE PLACEMENT OF ADDITIONAL DEVICES TO REDUCE EROSION DAMAGE AND CONTAIN POLLUTANTS WITHIN THE SITE IS LEFT TO THE DISCRETION OF THE FIELD ENGINEER. ADDITIONAL DEVICES AS NEEDED SHALL BE INSTALLED TO RETAIN SEDIMENTS AND OTHER POLLUTANTS ON SITE.
9. DESILTING BASINS MAY NOT BE REMOVED OR MADE INOPERABLE BETWEEN NOVEMBER 1 AND APRIL 15 OF THE FOLLOWING YEAR WITHOUT THE APPROVAL OF THE BUILDING OFFICIAL.
10. STORM WATER POLLUTION AND EROSION CONTROL DEVICES ARE TO BE MODIFIED, AS NEEDED, AS THE PROJECT PROGRESSES, THE DESIGN AND PLACEMENT OF THESE DEVICES IS THE RESPONSIBILITY OF THE FIELD ENGINEER. PLANS REPRESENTING CHANGES MUST BE SUBMITTED FOR APPROVAL IF REQUESTED BY THE BUILDING OFFICIAL.
11. EVERY EFFORT SHOULD BE MADE TO ELIMINATE THE DISCHARGE OF NON-STORM WATER FROM THE PROJECT SITES AT ALL TIMES.
12. ERODED SEDIMENTS AND OTHER POLLUTANTS MUST BE RETAINED ON-SITE AND MAY NOT BE TRANSPORTED FROM THE SITE VIA SHEET FLOW, SWALES, AREA DRAINS, NATURAL DRAINAGE COURSES, OR WIND.
13. STOCKPILES OF EARTH AND OTHER CONSTRUCTION-RELATED MATERIALS MUST BE PROTECTED FROM BEING TRANSPORTED FROM THE SITE BY THE FORCES OF WIND OR WATER.
14. FUELS, OILS, SOLVENTS, AND OTHER TOXIC MATERIALS MUST BE STORED IN ACCORDANCE WITH THEIR LISTING AND ARE NOT TO CONTAMINATE THE SOILS AND SURFACE WATERS. ALL APPROVED STORAGE CONTAINERS ARE TO BE PROTECTED FROM THE WEATHER. SPILLS MUST BE CLEANED UP IMMEDIATELY AND DISPOSED OF IN A PROPER MANNER. SPILLS MAY NOT BE WASHED INTO THE DRAINAGE SYSTEM.
15. EXCESS OR WASTE CONCRETE MAY NOT BE WASHED INTO THE PUBLIC WAY OR ANY OTHER DRAINAGE SYSTEM. PROVISIONS SHALL BE MADE TO RETAIN CONCRETE WASTES ON-SITE UNTIL THEY CAN BE DISPOSED OF AS SOLID WASTE.
16. DEVELOPERS/CONTRACTORS ARE RESPONSIBLE TO INSPECT ALL EROSION CONTROL DEVICES AND BMPS ARE INSTALLED AND FUNCTIONING PROPERLY IF THERE IS A 50% OR GREATER PROBABILITY OF PREDICTED PRECIPITATION, AND AFTER ACTUAL PRECIPITATION. A CONSTRUCTION SITE INSPECTION CHECKLIST AND INSPECTION LOG SHALL BE MAINTAINED AT THE PROJECT SITE AT ALL TIMES AND AVAILABLE FOR REVIEW BY THE BUILDING OFFICIAL. (COPIES OF THE SELF-INSPECTION CHECK LIST AND INSPECTION LOGS ARE AVAILABLE UPON REQUEST).
17. TRASH AND CONSTRUCTION-RELATED SOLID WASTES MUST BE DEPOSITED INTO A COVERED RECEPTACLE TO PREVENT CONTAMINATION OF RAINWATER AND DISPERSAL BY WIND.
18. SEDIMENTS AND OTHER MATERIALS MAY NOT BE TRACKED FROM THE SITE BY VEHICLE TRAFFIC. THE CONSTRUCTION ENTRANCE ROADWAYS MUST BE STABILIZED SO AS TO INHIBIT SEDIMENTS FROM BEING DEPOSITED INTO THE PUBLIC WAY. ACCIDENTAL DEPOSITIONS MUST BE SWEPT UP IMMEDIATELY AND MAY NOT BE WASHED DOWN BY RAIN OR OTHER MEANS.
19. ANY SLOPES WITH DISTURBED SOILS OR DENUDED OF VEGETATION MUST BE STABILIZED SO AS TO INHIBIT EROSION BY WIND AND WATER.
20. AS THE ENGINEER/QSD OF RECORD, I HAVE SELECTED APPROPRIATE BMPS TO EFFECTIVELY MINIMIZE THE NEGATIVE IMPACTS OF THIS PROJECT'S CONSTRUCTION ACTIVITIES ON STORM WATER QUALITY. THE PROJECT OWNER AND CONTRACTOR ARE AWARE THAT THE SELECTED BMPS MUST BE INSTALLED, MONITORED, AND MAINTAINED TO ENSURE THEIR EFFECTIVENESS.

CIVIL ENGINEER/QSD SIGNATURE — DATE 10/06/2021

21. THE FOLLOWING NOTES MUST BE ON THE PLAN:

    AS THE PROJECT OWNER OR AUTHORIZED AGENT OF THE OWNER, "I CERTIFY THAT THIS DOCUMENT AND ALL ATTACHMENTS WERE PREPARED UNDER MY DIRECTION OR SUPERVISION IN ACCORDANCE WITH THE SYSTEM DESIGNED TO ENSURE THAT A QUALIFIED PERSONNEL PROPERLY GATHER AND EVALUATE THE INFORMATION SUBMITTED. BASED ON MY INQUIRY OF THE PERSON OR PERSONS WHO MANAGE THE SYSTEM OR THOSE PERSONS DIRECTLY RESPONSIBLE FOR GATHERING THE INFORMATION, TO THE BEST OF MY KNOWLEDGE AND BELIEF, THE INFORMATION SUBMITTED IS TRUE, ACCURATE, AND COMPLETE. I AM AWARE THAT SUBMITTING FALSE AND/ OR INACCURATE INFORMATION, FAILING TO UPDATE THE ESCP TO REFLECT CURRENT CONDITIONS, OR FAILING TO PROPERLY AND/OR ADEQUATELY IMPLEMENT THE ESCP MAY RESULT IN REVOCATION OF GRADING AND/OR OTHER PERMITS OR OTHER SANCTIONS PROVIDED BY LAW."

OWNER OR AUTHORIZED REPRESENTATIVE (PERMITTEE) — DATE 3-17-22

22. DEVELOPERS/CONTRACTORS ARE RESPONSIBLE TO INSPECT ALL EROSION CONTROL DEVICES AND BMPS ARE INSTALLED AND FUNCTIONING PROPERLY AS REQUIRED BY THE STATE CONSTRUCTION GENERAL PERMIT. A CONSTRUCTION SITE INSPECTION CHECKLIST AND INSPECTION LOG SHALL BE MAINTAINED AT THE PROJECT SITE AT ALL TIMES AND AVAILABLE FOR REVIEW BY THE BUILDING OFFICIAL.

ATTACHMENT B NOTES:

23. THE FOLLOWING BMPS FROM THE "CASQA CONSTRUCTION BMP ONLINE HANDBOOK" MUST BE IMPLEMENTED FOR ALL CONSTRUCTION ACTIVITIES AS APPLICABLE. AS AN ALTERNATIVE, DETAILS FROM "CALTRANS STORMWATER QUALITY HANDBOOKS, CONSTRUCTION SITE BEST MANAGEMENT PRACTICES (BMP) MANUAL" MAY BE USED. ADDITIONAL MEASURES MAY BE REQUIRED IF DEEMED APPROPRIATE BY THE BUILDING OFFICIAL.

EROSION CONTROL

EC1 – SCHEDULING
EC2 – PRESERVATION OF EXISTING VEGETATION
EC3 – HYDRAULIC MULCH
EC4 – HYDROSEEDING
EC5 – SOIL BINDERS
EC6 – STRAW MULCH
EC7 – GEOTEXTILES & MATS
EC8 – WOOD MULCHING
EC9 – EARTH DIKES AND DRAINAGE SWALES
EC10 – VELOCITY DISSIPATION DEVICES
EC11 – SLOPE DRAINS
EC12 – STREAMBANK STABILIZATION
EC13 – POLYACRYLAMIDE
EC14 – COMPOST BLANKETS
EC15 – SOIL PREPARATION/ROUGHENING
EC16 – NON-VEGETATED STABILIZATION

TEMPORARY SEDIMENT CONTROL

SE1 – SILT FENCE
SE2 – SEDIMENT BASIN
SE3 – SEDIMENT TRAP
SE4 – CHECK DAM
SE5 – FIBER ROLLS
SE6 – GRAVEL BAG BERM
SE7 – STREET SWEEPING & VACUUMING
SE8 – SANDBAG BARRIER
SE9 – STRAW BALE BARRIER
SE10 – STORM DRAIN INLET PROTECTION
SE11 – ACTIVE TREATMENT SYSTEM
SE12 – TEMPORARY SILT DIKE
SE13 – COMPOST SOCKS & BERMS
SE14 – BIOFILTER BAGS

WIND EROSION CONTROL

WE1 – WIND EROSION CONTROL

EQUIPMENT TRACKING CONTROL

TC1 – STABILIZED CONSTRUCTION ENTRANCE EXIT
TC2 – STABILIZED CONSTRUCTION ROADWAY
TC3 – ENTRANCE/OUTLET TIRE WASH

NON-STORMWATER MANAGEMENT

NS1 – WATER CONSERVATION PRACTICES
NS2 – DEWATERING OPERATIONS
NS3 – PAVING AND GRINDING OPERATIONS
NS4 – TEMPORARY STREAM CROSSING
NS5 – CLEAR WATER DIVERSION
NS6 – ILLICIT CONNECTION/DISCHARGE
NS7 – POTABLE WATER/IRRIGATION
NS8 – VEHICLE AND EQUIPMENT CLEANING
NS9 – VEHICLES AND EQUIPMENT FUELING
NS10 – VEHICLE AND EQUIPMENT MAINTENANCE
NS11 – PILE DRIVING OPERATIONS
NS12 – CONCRETE CURING
NS13 – CONCRETE FINISHING
NS14 – MATERIAL AND EQUIPMENT USE
NS15 – DEMOLITION ADJACENT TO WATER
NS16 – TEMPORARY BATCH PLANTS

WASTE MANAGEMENT & MATERIAL POLLUTION CONTROL

WM1 – MATERIAL DELIVERY AND STORAGE
WM2 – MATERIAL USE
WM3 – STOCKPILE MANAGEMENT
WM4 – SPILL PREVENTION AND CONTROL
WM5 – SOLID WASTE MANAGEMENT
WM6 – HAZARDOUS WASTE MANAGEMENT
WM7 – CONTAMINATION SOIL MANAGEMENT
WM8 – CONCRETE WASTE MANAGEMENT
WM9 – SANITARY/SEPTIC WASTE MANAGEMENT
WM10 – LIQUID WASTE MANAGEMENT

EXISTING IMPERVIOUS SURFACE		NEW IMPERVIOUS SURFACE	
CONCRETE	303.45 SF	BUILDING, LANDING, PATIO, DRIVEWAY AND WALKWAY	2,748.88 SF

CONCLUSION: 2,748.88 / 303.45 = 905.88% MORE THAN 50% OF THE EXISTING SURFACE AREA, THEREFORE LID REQUIREMENTS APPLY.

THE PROJECT IS CONSIDERED A NON-DESIGNATED PROJECT. PLEASE SEE TWO TYPES OF LID ON PAGE 2 OF GRADING PLAN

EROSION CONTROL NOTES:

(A) CONSTRUCT SAND BAG EROSION CONTROL ALONG BOUNDARIES OF CONSTRUCTION AREA. THE SAND BAGS SHOULD BE 2 BAGS WIDE AND 2 BAGS HIGH.
(B) CONSTRUCT STABILIZED CONSTRUCTION ENTRANCE PER BMP #TC-1 (PROVIDE 12" MIN OF 1" TO 3" AGGREGATE)
(C) CONSTRUCT CONCRETE WASTE MANAGEMENT PER BMP # WM-8
(D) CONSTRUCT MATERIAL DELIVERY AND STORAGE PER BMP # WM-1
(E) PROPOSED STOCKPILE MANAGEMENT PER BMP # WM-3
(F) CONSTRUCT STORM DRAIN INLET PROTECTION PER BMP # SE-10

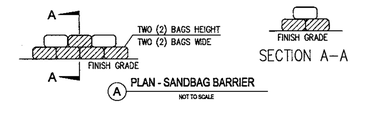

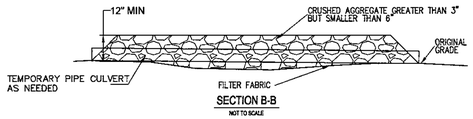

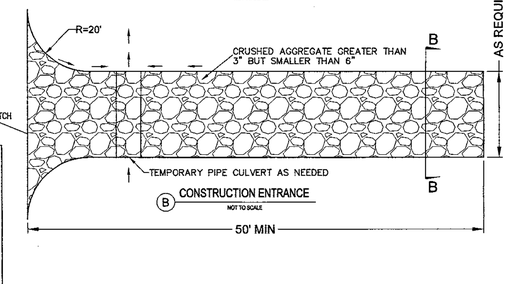

Bushman ▸ BSLT130

TOP VIEW

STRAINER BASKET
Material: Polypropylene
Color: Black
Dimension: 16" x 4"
Mesh: 20x20 S.S.

COVER
Material: Polypropylene
Color: Black
Diameter: 16"
Holes: 2 - 4" K.O.
1 - 3" Precut

SIDE VIEW

TANK
Material: Polyethylene
Ribs: 5

OVERFLOW
Material: Polypropylene
Diameter: 3" SDR 35

SPIGOT FITTING
Height: @ 21.25"
Diamater: 1/2" NPT
Location: Radius

FITTINGS
Type: Brass
Height: @ 2.5"
Location: Front
Diameter: 1" NPT

FEATURES

www.bushmanusa.com

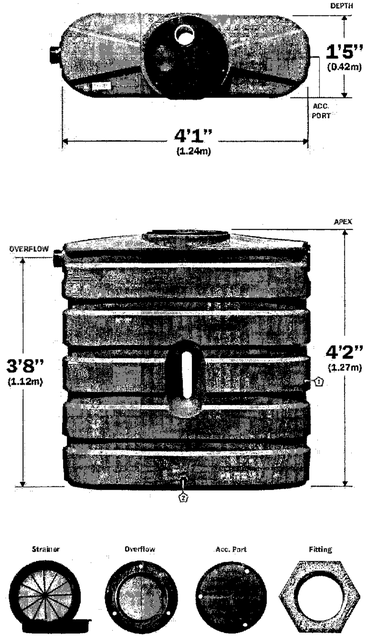

LEGEND:
.....LANDSCAPE
.....PERMEABLE CONCRETE
.....GRAVEL
.....IMPERVIOUS

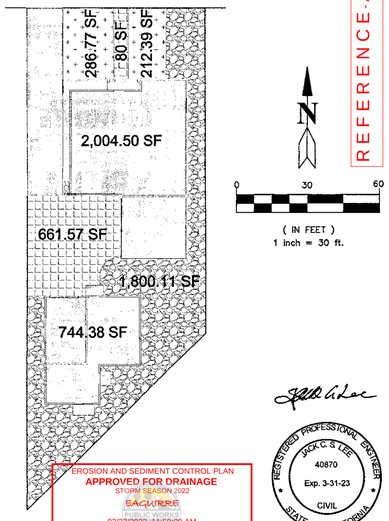

REFERENCE - Approved under a different Permit

EROSION AND SEDIMENT CONTROL PLAN
APPROVED FOR DRAINAGE
STORM SEASON 2022
LACWRRE
PUBLIC WORKS
03/23/2022 11:50:08 AM
BUILDING AND SAFETY DIVISION
LA COUNTY DEPARTMENT OF PUBLIC WORKS

REGISTERED PROFESSIONAL ENGINEER
JACK C. S. LEE
40870
Exp. 3-31-23
CIVIL
STATE OF CALIFORNIA

EARTH WORK QUANTITIES:

CUT: 63 CU.YD. IMPORT DIRT: 52 CU.YD.
FILL: 115 CU.YD.

NOTE:
THE YARDAGE SHOWN HEREON IS FOR PERMIT AND BONDING PURPOSES. THE CONTRACTOR SHALL BE RESPONSIBLE FOR VERIFYING OF THE QUANTITIES.

OWNER:

MR. SALVADOR POLINA
12531 PARAMOUNT BLVD, UNIT B,
DOWNEY, CA 90242
323-972-1988

BENCHMARK:

COUNTY BENCHMARK NO. EY11468

CS TAG IN W CB MEYER RD 6.5FT N/O BCR @ N END C.B. 44FT W/O C/L & 162FT N/O C/L LEFFINGWELL RD

ELEVATION: 112.102' (NAVD 1988)

LEGAL DESCRIPTION:

A PORTION OF LOT 87 OF TRACT NO. 10451, IN THE COUNTY OF LOS ANGELES, STATE OF CALIFORNIA, AS PER MAP RECORDED IN BOOK 155, PAGES 44 AND 45, OF MAPS, IN THE COUNTY RECORDER OFFICE OF SAID COUNTY.

APN: 8031-007-019

CALLAND ENGINEERING, INC.
dba QUARTECH CONSULTANTS
576 E. LAMBERT ROAD, BREA, CA 92821
TEL: (714) 671-1050 FAX: (714) 671-1090

PROJECT LOCATION: GRAD2109070004115
APN: 8031-007-019
VACANT LOT (13828 CREWE ST.), WHITTIER, CA 90605

DRAWN: PS
CHECKED:
DATE: 01/03/2022
JOB. NO.: 21-022-026
SCALE: 1" = 10'
FILE NAME:

C-3

SHEET 3 OF 3