FOUNDATION PLAN NOTES

FOR ALL FOUNDATION NOTES AND SPECIFICATIONS THAT COULDN'T BE SHOWN HERE FOR CLARITY SEE SHEET S-1.3.

SPECIAL INSPECTION REQUIRED

THE CONTRACTOR SHALL NOTE THAT SPECIAL INSPECTION IS REQUIRED FOR THIS PROJECT. FOR THE SPECIAL INSPECTIONS REQUIRED ON THIS PROJECT SEE THE SPECIAL INSPECTION NOTES ON SHEET S-1.3.

ENGINEERING
239-4151
John A. Kudla
Civil Engineering &
Structural Design
R.C.E. #50652
610 10th ST. UNIT 'A' PASO
ROBLES, CA.

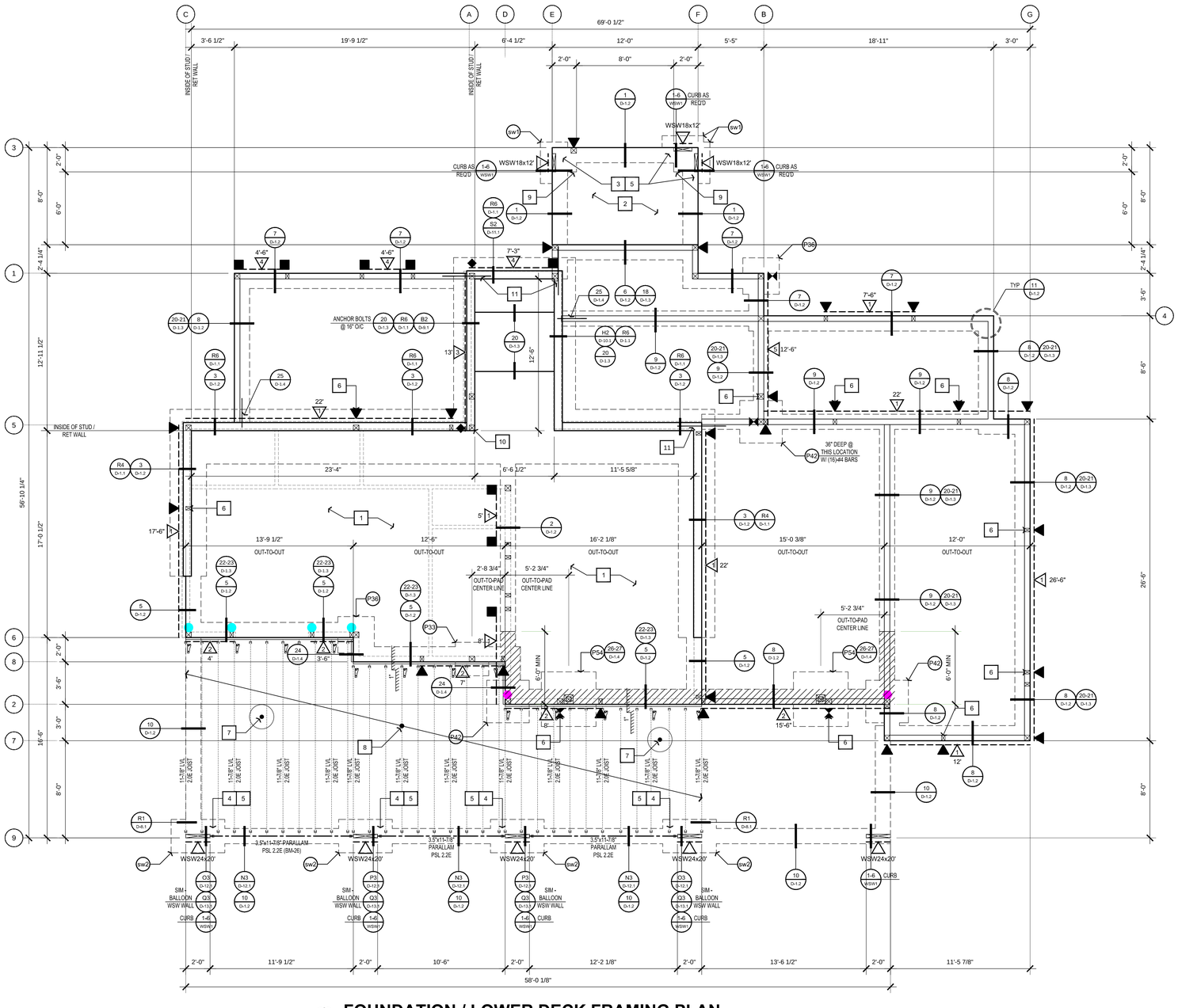

FOUNDATION / LOWER DECK FRAMING PLAN

1/4" = 1'

PLAN PREPARED FOR:

MICHAEL VELA
TR 1990-2, LOT 147
PASO ROBLES, CA 93446

REVISION LOG

REV.	DESCRIPTION	DATE

These drawings are the exclusive property of J.K. Engineering and shall be used solely for the purpose of this project on this site. Any use other than the project upon which it is intended for without the written consent of J.K. Engineering and John Kudla is prohibited.

PROJECT NO. ---

FILE NAME S-1.1 FOUNDATION PLAN.DWG

DRAWN BY NFS

DATE 5/1/2019 11:33 AM

SHEET TITLE:

FOUNDATION PLAN

SHEET NUMBER:

S-1.1

SITE DEVELOPMENT

6.2: SPECIFIC SITE DEVELOPMENT, GRADING PADS, AND FOUNDATION EXCAVATIONS

6.2.1. DUE TO THE PROPOSED CUT PAD SITUATION AND THE MEDIUM DENSE IN-PLACE NATIVE SOILS PRESENT ON-SITE, THE FOOTINGS MAY BE EXCAVATED TO EXTEND A MINIMUM OF (18)-INCHES BELOW LOWEST ADJACENT GRADE, OR (18)-INCHES INTO THE UNDERLYING MEDIUM DENSE TAN TO LIGHT BROWN MATERIAL (NOTED AS MATERIAL TYPES A2 AND A3 IN THE BORING LOGS) ENCOUNTERED AT A DEPTH OF (3)-FEET BELOW EXISTING GRADE, WHICHEVER IS DEEPER. TO ACHIEVE UNIFORM BEARING CONDITIONS, THE FOOTINGS WILL LIKELY NEED TO BE DEEPENED IN AREAS. A REPRESENTATIVE OF BEACON GEOTECHNICAL SHOULD BE NOTIFIED TO MONITOR FOOTING EXCAVATIONS.

6.2.2 PRIOR TO EXCAVATING FOOTINGS, THE SLAB AREAS SHOULD BE OVEREXCAVATED TO A DEPTH OF (1)-FOOT BELOW FINISH SUBGRADE, (3)-FEET BELOW EXISTING GRADE, OR THROUGH THE BROWN TOPSOIL MATERIAL (NOTED AS MATERIAL TYPE A1), WHICHEVER IS DEEPER. THE RESULTING SURFACE SHOULD BE SCARIFIED TO A DEPTH OF (1)-FOOT, MOISTURE CONDITIONED AND RECOMPACTED TO A MINIMUM OF 90% OF MAXIMUM DRY DENSITY.

6.2.3 ANY EXCAVATED MATERIAL FROM FOUNDATION AND SEPTIC OR DRAINAGE SYSTEMS SHOULD BE PROPERLY RECOMPACTED IN ACCORDANCE WITH ALL THE RECOMMENDATIONS FOR ENGINEERED FILL. ALTERNATIVELY, EXCAVATED SOIL MAY BE HAULED OFF SITE WHEN ADEQUATE PLACEMENT AREA IS NOT AVAILABLE AT THE PROJECT LOCATION.

6.2.4 AREAS OUTSIDE THE BUILDING AREA TO RECEIVE FILL, EXTERIOR SLABS-ON-GRADE, SIDEWALKS, AND PAVING SHOULD BE OVEREXCAVATED TO A DEPTH OF (1)-FOOT BELOW FINISH SUBGRADE OR EXISTING GRADE, WHICHEVER IS DEEPER. THE EXPOSED SURFACE SHOULD BE SCARIFIED, MOISTURE CONDITIONED AND RECOMPACTED.

6.2.5 ON-SITE SOILS MAY BE USED FOR FILL ONCE THEY ARE CLEANED OF ALL ORGANIC MATERIAL, ROCK, DEBRIS AND IRREDUCIBLE MATERIAL LARGER THAN EIGHT (8)-INCHES.

6.2.6 ALTHOUGH NOT ENCOUNTERED IN OUR BORINGS, SHOULD BE ANY TRASH, DEBRIS, OR SUBSURFACE STRUCTURES BE ENCOUNTERED DURING GRADING, REMOVALS WILL BE NECESSARY TO ADEQUATE DEPTHS AND HORIZONTAL LIMITS AS RECOMMENDED BY THIS FIRM AT THE TIME OF GRADING.

6.2.7 GRADING INSPECTIONS SHOULD BE PERFORMED IN ACCORDANCE WITH THE 2016 CALIFORNIA BUILDING CODE TABLE 1705.6. SEE APPENDIX B FOR PROJECT SPECIFIC GRADING OBSERVATION REQUIREMENTS.

6.3: SLOPE CONSTRUCTION

6.3.1. ALL HILLSIDE GRADING AND CONSTRUCTION OF FILL SLOPES SHOULD CONFORM TO A MINIMUM STANDARDS LISTED IN CHAPTER 18 OF THE 2016 CBC. IT IS RECOMMENDED THAT A REPRESENTATIVE OF BEACON GEOTECHNICAL REVIEW THE GRADING PLANS PRIOR TO GRADING AND SITE DEVELOPMENT.

6.3.2 FILL SLOPES SHOULD BE KEYED AND BENCHED INTO FIRM NATURAL GROUND WHEN THE EXISTING SLOPE TO RECEIVE FILL IS 10:1, HORIZONTAL TO VERTICAL, OR STEEPER. THE KEYS SHOULD BE TILTED INTO THE SLOPE, SHOULD BE A MINIMUM OF ONE EQUIPMENT WIDTH WIDE, AND SHOULD EXTEND A MINIMUM OF (3)-FEET DEEP AT THE OUTSIDE EDGE OR (3)-FEET INTO THE TAN A2 MATERIAL (NOTED AS MATERIAL TYPE A2), WHICHEVER IS DEEPER.

6.3.3 FILL SLOPES SHOULD BE OVERFILLED, COMPACTED AND CUT BACK TO PLANNED CONFIGURATIONS. THIS WILL YIELD BETTER COMPACTION ON THE SLOPE FACES THAN OTHER METHODS.

6.3.4 LINED DRAINAGE SWALES AND DOWN DRAINS SHOULD BE PROVIDED AT THE TOPS OF ALL CUT AND FILL SLOPES TO DIVERT DRAINAGE AWAY FROM THE SLOPE FACES.

6.3.5 CUT AND FILL SLOPES SHOULD NOT BE CONSTRUCTED STEEPER THAN 2:1 (HORIZONTAL TO VERTICAL). SETBACKS OF STRUCTURES FROM SLOPES SHOULD BE MAINTAINED AS PER THE 2016 CBC.

NOTE: FOR ALL OTHER RECOMMENDATIONS AND REQUIREMENTS NOT STATED HERE, THE CONTRACTOR SHALL REVIEW THE SOILS REPORT PRIOR TO STARTING CONSTRUCTION. IF THE CONTRACTOR HAS ANY QUESTIONS, PLEASE CONTACT BEACON GEOTECHNICAL, INC.

SPECIAL INSPECTION NOTES:

1. The engineer accepts no responsibility for special inspections during construction, or for the method or form of construction. Job site visits by the engineer do not constitute an official inspection.
2. Where "CONTINUOUS INSPECTION", "PERIODIC INSPECTION", or "SPECIAL INSPECTION" is required on the plans, the contractor, owner, or his agent shall employ an independent, approved* testing and inspection agency to provide a Deputy Inspector on site, Said Deputy Inspector shall understand that they as such, are acting as the agent of the engineer, architect, and governing jurisdictions. (CBC 1703.1.1)
3. Continuous Special Inspection, except where Periodic Special Inspection is allowed below, is required for the following:

Concrete: reinforcing, placing of concrete, during taking of test specimens, etc., as specified by CBC Table 1705.3 (except not required for foundation concrete if f'c design strength is not more than 2500 psi, and for site work concrete fully supported on earth),

Masonry: during preparation and taking of masonry test specimens, placing of all masonry units, placement of masonry reinforcement, inspection of grout space immediately prior to closing of cleanouts, during all grouting operations, etc., as specified by CBC Table 1705.4.

Epoxy/adhesive anchors in concrete and masonry per current "ICC' report.

Structural wood: periodic special inspection is required for nailing, bolting, anchoring and other fastening of components within the seismic-force-resisting system, including wood shear walls, wood diaphragms, drag struts, braces, shear panels and hold-downs,

Exception: Not required where shear wall fastener spacing is more than 4 inches on center.

High strength bolts: installation of high strength bolts shall be periodically inspected in accordance with current AISC specifications.

Shop welding*: if not performed in an approved fabrication shop per CBC Section 1705.2.

Field welding : of load supporting steel members.

* the special inspector need not be continuously present during welding of single-pass fillet welds not exceeding 5/16" size, provided the materials, qualifications of welding procedures, and welder certifications are verified prior to the start of work; periodic inspections are made of work in progress; and a visual inspection of all welds is made prior to completion or prior to shipment of shop welding.

4. Special inspection shall be provided/or the following specific phases of construction:

Item	Required?	Remarks
A. Soils compliance prior to foundation inspection.	YES	Beacon Geotechnical, Inc.
B. Moisture Meter Test for Framing Members	YES	City / County Inspector
C. Shear Wall Nailing < 4" O/C	YES	City / County Inspector
D. WSW Wood Shearwall holdown anchor type, size and placement, including embedment length, spacing, and edge distance	YES	City / County Inspector
E. Titen HD Screw Anchor Installation	YES	JK Engineering
F. Epoxy / Adhesive anchors	YES	JK Engineering
G. Field Welding	YES	Mid-Coast Geotechnical
H. Shop Welding	NO	Approved Shop

☐ FOUNDATION CALLOUTS

1. 4" CONCRETE SLAB -- SEE CONCRETE NOTE.
2. 4" CONCRETE SLAB AT COVERED PATIO -- SEE CONCRETE NOTE. SLOPE CONCRETE AWAY FROM BUILDING 2% MINIMUM. WHERE SLAB DOES NOT HAVE PERIMETER FOOTING, CONTRACTOR SHALL THICKEN PERIMETER AND USE CONTINUOUS #4 BAR AT THICKENED EDGE.
3. WSW18 WALL FOOTING SHALL BE 41" LONG X 27" WIDE X 24" DEEP. SIMPSON HOLDOWN BOLT TO BE INSTALLED 9" MINIMUM INTO ENLARGED FOOTING. ANCHOR BOLTS SHALL CONSIST OF 7/8" Ø ASTM 1554 GRADE 36 THREADED ROD W/ DOUBLE NUT AND WASHER AT BOTTOM OF THREADED ROD (MODEL #: WSW-AB7/8x24). **NOTE**: ANCHOR BOLT MODEL AND LENGTH SHALL BE DETERMINED BY CONTRACTOR IN FIELD. CONTRACTOR SHALL BUY EXTENSION KITS AS REQUIRED. SEE DETAIL SHEET WSW1 FOR FOOTING POSITION UNDER WSW WALL AND ALL OTHER INSTALLATION REQUIREMENTS.
4. WSW24 WALL FOOTING SHALL BE 53" LONG X 33" WIDE X 24" DEEP. SIMPSON HOLDOWN BOLT TO BE INSTALLED 11" MINIMUM INTO ENLARGED FOOTING. ANCHOR BOLTS SHALL CONSIST OF 1" Ø ASTM 1554 GRADE 36 THREADED ROD W/ DOUBLE NUT AND WASHER AT BOTTOM OF THREADED ROD (MODEL #: WSW-AB1x24). **NOTE**: ANCHOR BOLT MODEL AND LENGTH SHALL BE DETERMINED BY CONTRACTOR IN FIELD. CONTRACTOR SHALL BUY EXTENSION KITS AS REQUIRED. SEE DETAIL SHEET WSW1 FOR FOOTING POSITION UNDER WSW WALL AND ALL OTHER INSTALLATION REQUIREMENTS.
5. RUN PERIMETER REINFORCEMENT CONTINUOUS THROUGH WSW WALL FOOTING.
6. HOLDOWN PER PLAN FROM UPPER SHEARWALL. SEE UPPER FRAMING PLANS FOR SHEARWALL LOCATION.
7. USE 3/4" T&G APA RATED STURD-1 CDX PLY FLOOR SHEATHING AT EXTERIOR DECKS (SPAN INDEX 48 / 24) GLUED AND NAILED WITH 10d AT 6" - 6" - 12" O/C **OR** SCREWED WITH SIMPSON QUIK DRIVE SCREWS (MODEL #: WSNTL212S - 2.5" LONG) AT 6" - 6" - 12" O/C (BOUNDARY - EDGE - FIELD) CASE 1 LAYOUT.
8. 11-7/8" TJI 230 DECK JOIST @ 16" O/C. SLOPE JOIST 2% - SLOPE TO DRAIN. ALSO PROVIDE 1.75"x11-7/8" MICROLAM LVL 2.0E DECK JOIST @ 48" O/C FOR DECK PULLOUT CONNECTION.
9. EXTEND PAD FOOTING OUT AS REQUIRED FOR TWO FOOTING SQUARE ARCHITECTURAL COLUMN PER PLAN.
10. SB7/8x24" ANCHOR BOLT AT END OF 9'-0" RETAINING WALL STEM MUST BE INSTALLED INTO RETAINING WALL FOOTING. CONTRACTOR SHALL COUPLE UP 7/8" Ø ASTM F1554 GR. 36 ALL THREAD THROUGH RETAINING WALL STEM TO REQUIRED HEIGHT AT FINISHED FLOOR ABOVE RETAINING WALL. USE SIMPSON CNW7/8 COUPLE NUTS AS REQUIRED.
11. WHERE INTERSECTING FOOTING IS PARALLEL WITH RETAINING WALL STEM, CONTRACTOR SHALL PROVIDE (2)-#4 DOWELS TOP AND BOTTOM FROM FOOTING TO RETAINING WALL STEM. DOWELS SHALL EXTEND INTO BOTH FOOTING & STEM 24" MINIMUM.

TITEN SCREW ANCHOR INSTALLATION

1. DRILL A HOLE IN THE BASE MATERIAL USING A CARBIDE DRILL BIT THE SAME DIAMETER AS THE NOMINAL DIAMETER OF THE ANCHOR TO BE INSTALLED. DRILL THE HOLE TO THE SPECIFIED EMBEDMENT DEPTH PLUS A 1/2" DEEPER OVERALL TO ALLOW THE THREAD TAPPING DUST TO SETTLE.
2. BLOW HOLE CLEAN USING COMPRESSED AIR.
3. INSERT THE ANCHOR THROUGH THE FIXTURE AND INTO THE HOLE. TIGHTEN THE ANCHOR INTO THE BASE MATERIAL.
4. TIGHTEN THE ANCHOR INTO THE BASE MATERIAL UNTIL THE HEX-WASHER HEAD CONTACTS THE FIXTURE.

NOTES:

USE A TITEN HD SCREW ANCHOR ONE TIME ONLY - INSTALLING THE ANCHOR MULTIPLE TIMES MAY RESULT IN EXCESSIVE THREAD WEAR AND REDUCE LOAD CAPACITY. OVERSIZED HOLES IN BASE MATERIAL WILL REDUCE OR ELIMINATE THE MECHANICAL INTERLOCK OF THE THREADS WITH THE BASE MATERIAL AND REDUCE THE ANCHOR'S LOAD CAPACITY.

✱ EPOXY HOLDOWN NOTE

BASE MATERIAL TEMPERATURE MUST BE 50°F OR ABOVE AT TIME OF INSTALLATION. FOR BEST RESULTS, MATERIAL SHOULD BE BETWEEN 70°F AND 80°F AT TIME OF APPLICATION. TO WARM MATERIAL, STORE CARTRIDGES IN A WARM, UNIFORMLY HEATED AREA OR STORAGE CONTAINER. DO NOT IMMERSE CARTRIDGE IN WATER TO FACILITATE WARMING. MIXED MATERIAL IN NOZZLE CAN HARDEN IN 30 MINUTES AT TEMPERATURES OF 70°F AND ABOVE. USE ONLY APPROPRIATE SIMPSON STRONG-TIE MIXING NOZZLE IN ACCORDANCE WITH SIMPSON STRONG-TIE INSTRUCTIONS. MODIFICATION OR IMPROPER USE OF MIXING NOZZLE MAY IMPAIR EPOXY PERFORMANCE. **SIMPSON SET-XP EPOXY** HAS A 24-MONTH SHELF LIFE FROM DATE OF MANUFACTURE IN UNOPENED SIDE-BY-SIDE CARTRIDGE (ALWAYS CHECK EXPIRATION DATE ON PRODUCT LABEL - DO NOT USE EXPIRED PRODUCT).

HOLE PREPARATION INSTRUCTIONS:

1. DRILL 1/8" LARGER DIAMETER HOLE THAN SPECIFIED ALL THREAD INTO EXISTING FOOTING TO ACHIEVE **MINIMUM 12" EMBEDMENT INTO EXISTING FOOTING**.
2. BLOW - REMOVE DUST FROM HOLE WITH OIL-FREE COMPRESSED AIR FOR A MINIMUM 4 SECONDS. COMPRESSED AIR NOZZLE MUST REACH THE BOTTOM OF THE HOLE. COMPRESSED AIR PRESSURE MUST BE 80-PSI MINIMUM.
3. BRUSH - CLEAN WITH A NYLON BRUSH FOR A MINIMUM OF 4 CYCLES. BRUSH SHOULD PROVIDE RESISTANCE TO INSERTION. IF NO RESISTANCE IS FELT, THE BRUSH IS WORN AND MUST BE REPLACED.
4. BLOW - REMOVE DUST FROM HOLE WITH OIL-FREE COMPRESSED AIR FOR A MINIMUM OF 4 SECONDS. COMPRESSED AIR NOZZLE MUST REACH THE BOTTOM OF THE HOLE. COMPRESSED AIR PRESSURE MUST BE 80-PSI MINIMUM.

CARTRIDGE PREPARATION INSTRUCTIONS:

1. DISPENSE - DISPENSE ADHESIVE TO SIDE UNTIL PROPERLY MIXED (UNIFORM COLOR) DISPENSES FROM CARTRIDGE.

EPOXY INSTALLATION INSTRUCTIONS INTO VERTICAL DRY AND DAMP HOLES:

1. FILL HOLE 1/2 - 2/3 FULL, STARTING FROM BOTTOM OF HOLE TO PREVENT AIR POCKETS. WITHDRAW NOZZLE AS HOLE FILLS UP.
   JK ENGINEERING RECOMMENDS ALL CONTRACTORS USE SIMPSON PISTON PLUG DELIVERY SYSTEM (MODEL #: PP75-RP10 FOR 3/4" DILL BIT DIAMETER) FOR EPOXY INSTALLATION. CONTRACTOR SHALL INSERT PISTON PLUG TO BOTTOM OF DRILLED HOLE AND DISPENSE ADHESIVE UNTIL HOLE IS 1/2 TO 2/3 FULL. THE USE OF THE PISTON PLUG SYSTEM ALLOWS THE CONTRACTOR TO KNOW EXACTLY HOW MUCH EPOXY IS IN THE HOLE AND AVOIDS POSSIBLE AIR POCKETS.
2. INSERT CLEAN, OIL FREE ANCHOR, TURNING SLOWLY UNTIL THE ANCHOR CONTACTS THE BOTTOM OF THE HOLE.
3. DO NOT DISTURB ANCHOR UNTIL FULLY CURED.
   BASE MATERIAL TEMP = 50°F ---> CURE TIME = 72 HOURS
   60°F ---> CURE TIME = 48 HOURS
   +70°F ---> CURE TIME = 24 HOURS

FRAMING NOTES:

1. ALL LUMBER SHALL BE IDENTIFIED WITH THE GRADE MARK AND STAMP OF THE GRADING ASSOCIATION COVERING THE SPECIES AND UNDER WHOSE GRADING RULES THE LUMBER WAS PRODUCED.
2. THE MANUFACTURERS A.I.T.C. CERTIFICATION OF COMPLIANCE FOR GLU-LAM BEAMS OR MICRO-LAM BEAMS IS TO BE PROVIDED AT THE TIME OF FRAMING INSPECTION AND PROPERLY INDICATE THE FIBER BENDING AND GRADE SPECIFICATION.
3. ALL COIL STRAPS ARE TO BE EVENLY DISTRIBUTED ONTO BOTH MEMBERS BEING CONNECTED. (U.O.N.)
4. ALL BEARING POST AT ANY GIVEN FLOOR LEVEL SHALL BE CONTINUOUS FROM POINT OF ORIGIN TO FOUNDATION. PROVIDE 4X SOLID BLOCKING AT FLOOR SYSTEM BETWEEN BEARING POST ABOVE AND BELOW. SEE FRAMING PLANS FOR 4X OR 6X BEARING POST LOCATIONS.
5. ALL INTERIOR NON-BEARING WALLS TO BE ANCHORED TO CONCRETE SLAB W/ SIMPSON SHOT PINS (MODEL #: PDPAW-287 - MECHANICALLY GALVANIZED) @ 24" O/C MAX SPACING. SHOT PINS SHALL BE CENTERED ON SILL PLATES.
6. ALL COIL STRAPS ARE TO BE **FULLY NAILED** UNLESS OTHERWISE NOTED ON SPECIFIED DETAIL.

FOUNDATION NOTES:

1. STRENGTH OF CONCRETE AT 28 DAYS SHALL BE 2500 PSI MINIMUM.
2. ALL HOLDOWNS AND BRACKETS IN CONCRETE SHALL BE SET IN PLACE PRIOR TO FOUNDATION INSPECTION.
3. A COPY OF THE SOILS REPORT SHALL BE ON SITE DURING FOUNDATION INSPECTION.
4. VERIFY ALL HOLDOWNS AND ANCHOR BOLTS LOCATIONS WITH FLOOR PLAN.
5. THE SOILS ENGINEER SHALL INSPECT AND APPROVE THE FOUNDATION EXCAVATIONS BEFORE REQUESTING A BUILDING DIVISION FOUNDATION INSPECTION.
6. PRIOR TO CALLING FOR BUILDING DIVISION FOUNDATION INSPECTION, PRELIMINARY GRADING AND COMPACTION REPORTS SHALL BE SUBMITTED TO AND APPROVED BY THE BUILDING DIVISION GRADING INSPECTOR.
7. THE FASTENERS EMBEDDED IN CONCRETE SHALL BE ATTACHED TO, OR HOOKED AROUND, REINFORCING BELOW, OR OTHERWISE TERMINATED TO EFFECTIVELY TRANSFER FORCES TO THE REINFORCING STEEL. (SEC 1633.2.4.2 #6)
8. HOLD DOWN DEVICES MUST BE SECURED IN PLACE PRIOR TO FOUNDATION INSPECTION.
9. SLABS SHALL BE SAW CUT 3/4" DEEP @ 15" O.C. GRIDS WITHIN 24 HOURS OF SLAB POUR.
10. PROVIDE FINAL SOILS REPORT PRIOR TO FOUNDATION INSPECTION. THIS REPORT SHALLCERTIFY THAT THE SOIL PREPARED IS TO THE PRELIMINARY SOIL REPORT AND THE SOIL CONDITION IS SUITABLE FOR THE PROPOSED STRUCTURE. THIS REPORT SHALL BE SIGNED AND WET STAMPED BY THE SOIL ENGINEER.
11. SOIL ENGINEER SHALL INSPECT ALL FOUNDATION EXCAVATIONS PRIOR TO CONCRETE POURING AND OBSERVE ALL REQUIRED MOISTURE CONDITIONS OF UNDER-SLAB AREAS.
12. PRIOR TO POURING FOUNDATION, A LICENSED PROFESSIONAL SHALL PERFORM A FOUNDATION PAD INSPECTION. A LETTER IS TO BE SENT TO THE PLAN CHECK DIVISION AND CERTIFY THAT THE CONSTRUCTION OF THE PAD IS TO THE SITE PLAN AND TO THE ARCHITECTURAL PLAN; AND NO DEVIATION FROM THE APPROVED PLANS.

FOUNDATION VERIFICATION LETTER REQ'D

PRIOR TO THE CONTRACTOR REQUESTING A BUILDING DEPARTMENT FOUNDATION INSPECTION, THE SOILS ENGINEER SHALL ADVISE THE BUILDING OFFICIAL IN WRITING THAT:

1. THE BUILDING PAD WAS PREPARED IN ACCORDANCE WITH THE SOILS REPORT.
2. THE UTILITY TRENCHES HAVE BEEN PROPERLY BACKFILLED AND COMPACTED.
3. THE FOUNDATION EXCAVATIONS COMPLY WITH THE INTENT OF THE SOILS REPORT.

CONTRACTOR WSW WALL NOTE

THE CONTRACTOR SHALL NOTE THAT SIMPSON MAKES DIFFERENT TEMPLATE PLATES FOR EACH OF THEIR PRE-ENGINEERED SHEAR BRACE WALLS. USE CARE WHEN ORDERING ANCHORAGE / TEMPLATE KIT TO ORDER CORRECT KIT FOR WSW WALL DENOTED ON PLANS.

ANCHOR BOLT NOTE

2 X SILL PLATE ----------> USE 5/8" DIAMETER X 10" MIN. ANCHOR BOLTS
3 X SILL PLATE ----------> USE 5/8" DIAMETER X 12" MIN. ANCHOR BOLTS

ASTM F1554 GR. 36 ANCHOR BOLTS SHALL BE EMBEDDED 7" MINIMUM INTO PERIMETER FOOTING AND SPACED AT 4 FEET MAX. ON CENTER UNLESS NOTED OTHERWISE ON SHEAR WALL SCHEDULE. BOLTS SHALL BE A MAXIMUM OF 12" BUT NOT LESS THAN 4" FROM SILL ENDS AND SPLICES WITH A MINIMUM OF 2 BOLTS PER SPLICE. MINIMUM TWO ANCHOR BOLTS PER SHEARWALL. PROVIDE 0.229" THICK x 3" SQUARE FLAT PLATE WASHER W/ ANCHOR BOLTS (SIMPSON BPS5/8-3). **WASHERS MUST BE WITHIN 1/2" OF STRUCTURAL SHEATHING.**

FOUNDATION PLAN LEGEND

= 15" WIDE X 24" DEEP CONTINUOUS FOOTING WITH: (3)-#4 BARS TOP AND BOTTOM

PAD FOOTING LEGEND

(SW1) = WSW18 FOOTING SHALL BE 41" LONG X 27" WIDE X 24" DEEP CENTERED UNDER WSW WALL.
PROVIDE TWO MATS OF REINFORCEMENT IN ANCHORAGE PAD FOOTING (ONE MAT AT TOP AND BOTTOM).
DOUBLE MATS OF REINFORCEMENT SHALL BE AS FOLLOWS:
ALONG LENGTH OF FOOTING: (2)-ROWS OF (5)-#4 BARS
ALONG WIDTH OF FOOTING: (2)-ROWS OF (4)-#4 BARS

(SW2) = WSW24 FOOTING SHALL BE 53" LONG X 33" WIDE X 24" DEEP CENTERED UNDER WSW WALL.
PROVIDE TWO MATS OF REINFORCEMENT IN ANCHORAGE PAD FOOTING (ONE MAT AT TOP AND BOTTOM).
DOUBLE MATS OF REINFORCEMENT SHALL BE AS FOLLOWS:
ALONG LENGTH OF FOOTING: (2)-ROWS OF (7)-#4 BARS
ALONG WIDTH OF FOOTING: (2)-ROWS OF (4)-#4 BARS

(P33) = 33" SQUARE X 24" DEEP INTO COMPETENT MATERIAL WITH: (8)-# 4 BARS EACH WAY ---> SEE DETAIL (19/D-1.3)

(P36) = 36" SQUARE X 24" DEEP INTO COMPETENT MATERIAL WITH: (10)-#4 BARS EACH WAY ---> DETAIL (19/D-1.3)
PAB8 ANCHOR BOLT REQUIRES 18" MINIMUM EDGE DISTANCE IN ALL DIRECTIONS FROM CENTER OF BOLT. ENLARGE PAD FOOTING AS REQUIRED TO ACHIEVE EDGE DISTANCE. ---> SEE DETAIL (16/D-1.3)

(P42) = 42" SQUARE X 24" DEEP INTO COMPETENT MATERIAL WITH: (12)-#4 BARS EACH WAY ---> DETAIL (19/D-1.3)
PAB8 ANCHOR BOLT REQUIRES 18" MINIMUM EDGE DISTANCE IN ALL DIRECTIONS FROM CENTER OF BOLT. ENLARGE PAD FOOTING AS REQUIRED TO ACHIEVE EDGE DISTANCE. ---> SEE DETAIL (17/D-1.3)

(P54) = 54" SQUARE X 24" DEEP INTO COMPETENT MATERIAL WITH: (14)-# 4 BARS EACH WAY
SEE DETAILS (19/D-1.3) & (26-27/D-1.4)

NOTES:

1. BARS SHALL BE A MINIMUM 3" CLEAR FROM BOTTOM AND SIDES OF FOOTING
2. **RUN PERIMETER REINFORCEMENT CONTINUOUS THROUGH PAD FOOTING.**
3. PAD FOOTING TO BE PROVIDED CENTERED DIRECTLY BELOW SHEAR WALL END POST / BEARING POST PER PLAN. SEE PLAN FOR POST LOCATIONS.
4. FOR STRUCTURES TO BE CONSTRUCTED ABOVE SLOPES, THE OUTSIDE FACES AT THE BOTTOM OF FOOTINGS SHOULD PROVIDE A MINIMUM HORIZONTAL DISTANCE OF 20-FEET FROM THE SLOPE FACE. CONTRACTOR SHALL DEEPEN FOOTING AS REQUIRED.
5. PAD FOOTING REINFORCEMENT MAY BE BROKEN UP INTO TWO MATS (ONE TOP AND BOTTOM) IF DESIRED.

STEPPED FOOTING REQUIREMENTS

THE CONTRACTOR SHALL NOTE THAT IF THE EXISTING GRADE SLOPES MORE THAN 10:1 (HORIZONTAL : VERTICAL) THEN STEPPED FOOTINGS PER DETAIL (20-21/D-1.3) MUST BE CONSTRUCTED. IF THE EXISTING SLOPE IS LESS THAN 10:1, THEN DETAIL (20-21/D-1.3) MAY BE OMITTED.

SHEAR WALL SCHEDULE

	SHEAR (plf)	MATERIAL	2 SIDES	NAILING (E.N. F.N.)	TOP PLATE CONNECTOR [1],[2],[3]	SILL PLATE NAILS [6] @ SUB-FLR	½" Ø A.B. [4] @ FND
1	280	15/32" OSB (ID# 24/0)	N	8d @ 6 - 12	RBC @ 18" o/c or LPT4 @ 24" o/c	16d @ 6" o/c	48" o/c
2	430	15/32" OSB (ID# 24/0)	N	8d @ 4 - 12	RBC @ 12" o/c or LPT4 @ 16" o/c	16d @ 4.5" o/c	40" o/c
3	550	15/32" OSB (ID# 24/0)	N	8d @ 3 - 12	RBC @ 8" o/c or LPT4 @ 12" o/c	16d @ 3.5" o/c	32" o/c
4	665	15/32" OSB (ID# 24/0)	N	10d @ 3 - 12	RBC @ 6" o/c or LPT4 @ 10" o/c	16d @ 3.0" o/c	26" o/c
5	870	15/32" OSB (ID# 24/0)	N	10d @ 2 - 12	RBC @ 6" o/c or LPT4 @ 8" o/c	SDWS0.22x6" SCREWS @ 6" O/C	20" o/c
5 LB HS	1330	15/32" OSB (ID# 24/0)	Y	10d @ 3 - 12	LTP4 @ 5" o/c	(2)-Rows SDWS0.22x6" SCREWS @ 6" O/C	12" o/c
5 LB HS	1740	15/32" OSB (ID# 24/0)	Y	10d @ 2 - 12	LTP4 @ 4" o/c	(2)-Rows SDWS0.22x6" SCREWS @ 6" O/C	10" o/c

FOOTNOTES:

1. All sheathing to be Struct I panel grade and fully blocked.
2. Refer to "Vertical Diaphragm Notes" for material and application specifications.
3. All nails specified are common. Where "air-gun" nailing is used, care shall be taken to use true common nail equivalents.
4. Provide 0.229" thick x 3" square; flat plate washers at all 5/8" diameter anchor bolts. Plate washer is required to be within 1/2" of plywood sheathing.
5. If referenced detail does NOT show A35's and only H1 clips at truss to top plate / beam connection, then H1 clips were designed to handle shear transfer and additional A35's are NOT required at that wall line. Only provide A35's when referenced detail shows them and calls out required spacing --> See Footnote #12.
6. Use RBC @ 3x sill plate to rim joist or solid blocking with spacing per "Top Plate Connector".
7. Ok to use (1) A35 clip in lieu of (1) RBC as needed.
8. Studs shall be 3x minimum @ panel edges. Use 3x P.T.D.F. bottom plate for Shear Panel 6 & 7. Use 2x P.T.D.F. bottom plate for Shear Panels 1-5. Stagger nails @ double top plate and panel edges.
9. Stagger nails at opposite sides of wall.
10. Provide a double rim joist and stagger SDWS screws by 3".
11. Install LTP4 with 8d common nails only.
12. Apply A35 / LTP4'S per shearwall schedule for length of shearwall when referenced detail states "Per Shearwall Schedule." If referenced detail states A35 / LTP4'S at incremental spacing along "entire length of wall," the contractor shall provided them across entire length of wall and NOT just at shearwall. (No additional fasteners are required at shearwalls when detail references along entire length of wall)

HOLDOWN KEY

▼ = HDU2 W/ SB5/8x24. USE 4X6 D.F. #2 POST W/ HOLDOWN. SEE DETAILS (12-15/D-1.3) FOR APPROPRIATE APPLICATION.
■ = HDU4 W/ SB5/8x24. USE 4X6 D.F. #2 POST W/ HOLDOWN. SEE DETAILS (12-15/D-1.3) FOR APPROPRIATE APPLICATION.
● = HDU5 W/ SB5/8x24. USE 4X6 D.F. #2 POST W/ HOLDOWN. SEE DETAILS (12-15/D-1.3) FOR APPROPRIATE APPLICATION.
◆ = HDU8 W/ SB7/8x24. USE 6X6 D.F. #1 POST W/ HOLDOWN. SEE DETAILS (12-15/D-1.3) FOR APPROPRIATE APPLICATION.
⧗ = HDU11 W/ **PAB8** ANCHOR BOLT EMBEDDED MINIMUM **12" INTO FIRST POUR** W/ MINIMUM EDGE DISTANCE OF **18" IN ALL DIRECTIONS**. SEE SIMPSON CATALOG FOR SPECIFICATIONS. CONTRACTOR SHALL WIDEN FOOTING AS NECESSARY. USE 6X6 D.F. #1 POST PER PLAN. SEE DETAIL (16/D-1.3)
● = HDU14 W/ **PAB8** ANCHOR BOLT EMBEDDED MINIMUM **12" INTO FIRST POUR** W/ MINIMUM EDGE DISTANCE OF **18" IN ALL DIRECTIONS**. SEE SIMPSON CATALOG FOR SPECIFICATIONS. CONTRACTOR SHALL WIDEN FOOTING AS NECESSARY. HDU14 REQUIRES **HEAVY HEX ANCHOR NUT** SUPPLIED WITH HOLDOWN. PROVIDE **CNW1 COUPLER NUT** THROUGH STEM FOOTING AS REQUIRED. USE 6X6 D.F. #1 POST PER PLAN. SEE DETAIL (17/D-1.3)

HOLDOWN NOTES:

1. HOLDOWN ANCHORS MUST BE TIED IN PLACE PRIOR TO FOUNDATION INSPECTION AND RE-TIGHTENED JUST PRIOR TO COVERING THE WALL FRAMING.
2. HDU HOLDOWNS MAY BE INSTALLED 18" MAXIMUM ABOVE TOP OF CONCRETE.

SB HOLDOWN ANCHOR DETAIL

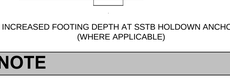

INCREASED FOOTING DEPTH AT SSTB HOLDOWN ANCHOR (WHERE APPLICABLE)

SOIL NOTE

SOILS EXPANSION INDEX: VERY LOW TO LOW
REPORT #: F-101663
BY: BEACON GEOTECHNICAL, INC.
DATED: SEPTEMBER 28, 2017

THE SOILS REPORT REFERENCED IS PART OF THESE PLANS AND ALL RECOMMENDATIONS THERE IN SHALL BE COMPLIED WITH.

CONCRETE NOTE

CONCRETE SLAB SHALL BE 4" THICK MINIMUM WITH #3 BARS @ 18" O/C. EACH WAY. SET REINFORCEMENT AT MID DEPTH OF SLAB. SLABS SHOULD BE UNDERLAIN WITH A MINIMUM OF FOUR (4) INCHES OF CLEAN AND FREE DRAINING SAND. AREAS WHERE FLOOR WETNESS WOULD BE UNDESIRABLE (LIVING - CONDITIONED SPACE) MUST BE UNDERLAIN WITH A 10-MIL MOISTURE BARRIER TO REDUCE MOISTURE TRANSMISSION FROM THE SUBGRADE SOILS TO THE SLAB. THE MEMBRANE SHOULD BE PLACED AT MID-HEIGHT IN THE CLEAN SAND.

FOOTINGS SHALL BE 15 INCHES WIDE X 24 INCHES DEEP WITH (2)-#4 BARS TOP AND BOTTOM UNLESS OTHERWISE NOTED ON FOUNDATION PLAN. WHERE DEEPENED FOOTINGS ARE REQUIRED BY GEOTECHNICAL ENGINEER OF RECORD SEE DETAIL (4/D-1.2). FOOTINGS AND / OR DEEPENED FOOTINGS SHALL EXTEND A MINIMUM OF (18)-INCHES INTO THE UNDERLYING MEDIUM DENSE TAN TO LIGHT BROWN MATERIALS, NOTED AS SOIL TYPES A2 AND A3 INT HE PROJECT BORING LOGS.

FOR STRUCTURES TO BE CONSTRUCTED ABOVE SLOPES, THE OUTSIDE FACES AT THE BOTTOM OF FOOTINGS SHOULD PROVIDE A MINIMUM HORIZONTAL DISTANCE OF TWENTY (20) FEET FOR THE SLOPE FACE.

ALWAYS CHECK FOUNDATION LEGEND FOR DIFFERENCES IN REBAR SIZES AND LOCATIONS. NOTE THAT DEPTH OF FOOTING SHALL BEGIN AT COMPETENT MATERIAL, WHICH MAY OR MAY NOT BE THE SAME AS FINISHED GRADE. USE #3 REINFORCEMENT BARS SET 3" MINIMUM ABOVE THE BOTTOM OF THE FOOTING AND BENT 3'-0" MINIMUM INTO SLAB.

**FOUNDATION EXCAVATIONS SHOULD BE OBSERVED BY A REPRESENTATIVE OF BEACON GEOTECHNICAL, INC. AFTER

SPECIAL INSPECTION NOTES:

1. The engineer accepts no responsibility for special inspections during construction, or for the method or form of construction. Job site visits by the engineer do not constitute an official inspection.
2. Where "CONTINUOUS INSPECTION", "PERIODIC INSPECTION", or "SPECIAL INSPECTION" is required on the plans, the contractor, owner, or his agent shall employ an independent, approved* testing and inspection agency to provide a Deputy Inspector on site, Said Deputy Inspector shall understand that they as such, are acting as the agent of the engineer, architect, and governing jurisdictions. (CBC 1703.1.1)
3. Continuous Special Inspection, except where Periodic Special Inspection is allowed below, is required for the following:

   Concrete: reinforcing, placing of concrete, during taking of test specimens, etc., as specified by CBC Table 1705.3 (except not required for foundation concrete if f'c design strength is not more than 2500 psi, and for site work concrete fully supported on earth),

   Masonry: during preparation and taking of masonry test specimens, placing of all masonry units, placement of masonry reinforcement, inspection of grout space immediately prior to closing of cleanouts, during all grouting operations, etc., as specified by CBC Table 1705.4.

   Epoxy/adhesive anchors in concrete and masonry per current "ICC' report.

   Structural wood: periodic special inspection is required for nailing, bolting, anchoring and other fastening of components within the seismic-force-resisting system, including wood shear walls, wood diaphragms, drag struts, braces, shear panels and hold-downs,

   Exception: Not required where shear wall fastener spacing is more than 4 inches on center.

   High strength bolts: installation of high strength bolts shall be periodically inspected in accordance with current AISC specifications.

   Shop welding*: if not performed in an approved fabrication shop per CBC Section 1705.2.

   Field welding·: of load supporting steel members.

   * the special inspector need not be continuously present during welding of single-pass fillet welds not exceeding 5/16" size, provided the materials, qualifications of welding procedures, and welder certifications are verified prior to the start of work; periodic inspections are made of work in progress; and a visual inspection of all welds is made prior to completion or prior to shipment of shop welding.
4. Special inspection shall be provided/or the following specific phases of construction:

Item	Required?	Remarks
A. Soils compliance prior to foundation inspection.	YES	Beacon Geotechnical, Inc.
B. Moisture Meter Test for Framing Members	YES	City / County Inspector
C. WSW Wood Shearwall holdown anchor type, size and placement, including embedment length, spacing, and edge distance	YES	City / County Inspector

CONTRACTOR WSW WALL NOTE

THE CONTRACTOR SHALL NOTE THAT SIMPSON MAKES DIFFERENT TEMPLATE PLATES FOR EACH OF THEIR PRE-ENGINEERED SHEAR BRACE WALLS. USE CARE WHEN ORDERING ANCHORAGE / TEMPLATE KIT TO ORDER CORRECT KIT FOR WSW WALL DENOTED ON PLANS.

ANCHOR BOLT NOTE

2 X SILL PLATE ----------> USE 5/8" DIAMETER X 10" MIN. ANCHOR BOLTS
3 X SILL PLATE ----------> USE 5/8" DIAMETER X 12" MIN. ANCHOR BOLTS

ASTM F1554 GR. 36 ANCHOR BOLTS SHALL BE EMBEDDED 7" MINIMUM INTO PERIMETER FOOTING AND SPACED AT 4 FEET MAX. ON CENTER UNLESS NOTED OTHERWISE ON SHEAR WALL SCHEDULE. BOLTS SHALL BE A MAXIMUM OF 12" BUT NOT LESS THAN 4" FROM SILL ENDS AND SPLICES WITH A MINIMUM OF 2 BOLTS PER SPLICE. MINIMUM TWO ANCHOR BOLTS PER SHEARWALL. PROVIDE 0.229" THICK x 3" SQUARE FLAT PLATE WASHER W/ ANCHOR BOLTS (SIMPSON BPS5/8-3). **WASHERS MUST BE WITHIN 1/2" OF STRUCTURAL SHEATHING.**

PAD FOOTING LEGEND

(SW) = WSW24 FOOTING SHALL BE 53" LONG X 33" WIDE X 18" DEEP CENTERED UNDER WSW WALL.
PROVIDE TWO MATS OF REINFORCEMENT IN ANCHORAGE PAD FOOTING (ONE MAT AT TOP AND BOTTOM).
DOUBLE MATS OF REINFORCEMENT SHALL BE AS FOLLOWS:
ALONG LENGTH OF FOOTING: (2)-ROWS OF (5)-#4 BARS
ALONG WIDTH OF FOOTING: (2)-ROWS OF (3)-#4 BARS

NOTES:
1. BARS SHALL BE A MINIMUM 3" CLEAR FROM BOTTOM AND SIDES OF FOOTING.
2. **RUN PERIMETER REINFORCEMENT CONTINUOUS THROUGH PAD FOOTING.**
3. PAD FOOTING TO BE PROVIDED CENTERED DIRECTLY BELOW SHEAR WALL END POST / BEARING POST PER PLAN. SEE PLAN FOR POST LOCATIONS.
4. FOR STRUCTURES TO BE CONSTRUCTED ABOVE SLOPES, THE OUTSIDE FACES AT THE BOTTOM OF FOOTINGS SHOULD PROVIDE A MINIMUM HORIZONTAL DISTANCE OF 20-FEET FROM THE SLOPE FACE. CONTRACTOR SHALL DEEPEN FOOTING AS REQUIRED.
5. PAD FOOTING REINFORCEMENT MAY BE BROKEN UP INTO TWO MATS (ONE TOP AND BOTTOM) IF DESIRED.

FOUNDATION CALLOUTS

1. 4" CONCRETE SLAB -- SEE CONCRETE NOTE.
2. PROVIDE 4" CONCRETE DRIVEWAY WITH #3 @ 18" O/C SET AT MIDSPAN OF SLAB OVER 4" CLEAN COMPACTED FILL SAND. PROVIDE 1/4" CONTROL JOINTS AS INDICATED AND AT 20'-0" O/C MAXIMUM. SLOPE CONCRETE AWAY FROM BUILDING 2% MINIMUM. THICKEN PERIMETER AND USE CONTINUOUS #4 BARS.
3. WSW24 WALL FOOTING SHALL BE 53" LONG X 33" WIDE X 18" DEEP. SIMPSON HOLDOWN BOLT TO BE INSTALLED 11" MINIMUM INTO ENLARGED FOOTING. ANCHOR BOLTS SHALL CONSIST OF 1" Ø ASTM 1554 GRADE 36 THREADED ROD W/ DOUBLE NUT AND WASHER AT BOTTOM OF THREADED ROD (MODEL #: WSW-AB1x24). **NOTE**: ANCHOR BOLT MODEL AND LENGTH SHALL BE DETERMINED BY CONTRACTOR IN FIELD. CONTRACTOR SHALL BUY EXTENSION KITS AS REQUIRED. SEE DETAIL SHEET WSW1 FOR FOOTING POSITION UNDER WSW WALL AND ALL OTHER INSTALLATION REQUIREMENTS.
4. RUN PERIMETER REINFORCEMENT CONTINUOUS THROUGH WSW WALL FOOTING.
5. PROVIDE 1" HIGH X 6" WIDE CONCRETE CURB AROUND GARAGE PERIMETER (TYP).

SITE DEVELOPMENT

6.2: SPECIFIC SITE DEVELOPMENT, GRADING PADS, AND FOUNDATION EXCAVATIONS

6.2.1. DUE TO THE PROPOSED CUT PAD SITUATION AND THE MEDIUM DENSE IN-PLACE NATIVE SOILS PRESENT ON-SITE, THE FOOTINGS MAY BE EXCAVATED TO EXTEND A MINIMUM OF (18)-INCHES BELOW LOWEST ADJACENT GRADE, OR (18)-INCHES INTO THE UNDERLYING MEDIUM DENSE TAN TO LIGHT BROWN MATERIAL (NOTED AS MATERIAL TYPES A2 AND A3 IN THE BORING LOGS) ENCOUNTERED AT A DEPTH OF (3)-FEET BELOW EXISTING GRADE, WHICHEVER IS DEEPER. TO ACHIEVE UNIFORM BEARING CONDITIONS, THE FOOTINGS WILL LIKELY NEED TO BE DEEPENED IN AREAS. A REPRESENTATIVE OF BEACON GEOTECHNICAL SHOULD BE NOTIFIED TO MONITOR FOOTING EXCAVATIONS.

6.2.2 PRIOR TO EXCAVATING FOOTINGS, THE SLAB AREAS SHOULD BE OVEREXCAVATED TO A DEPTH OF (1)-FOOT BELOW FINISH SUBGRADE, (3)-FEET BELOW EXISTING GRADE, OR THROUGH THE BROWN TOPSOIL MATERIAL (NOTED AS MATERIAL TYPE A1), WHICHEVER IS DEEPER. THE RESULTING SURFACE SHOULD BE SCARIFIED TO A DEPTH OF (1)-FOOT, MOISTURE CONDITIONED AND RECOMPACTED TO A MINIMUM OF 90% OF MAXIMUM DRY DENSITY.

6.2.3 ANY EXCAVATED MATERIAL FROM FOUNDATION AND SEPTIC OR DRAINAGE SYSTEMS SHOULD BE PROPERLY RECOMPACTED IN ACCORDANCE WITH ALL THE RECOMMENDATIONS FOR ENGINEERED FILL. ALTERNATIVELY, EXCAVATED SOIL MAY BE HAULED OFF SITE WHEN ADEQUATE PLACEMENT AREA IS NOT AVAILABLE AT THE PROJECT LOCATION.

6.2.4 AREAS OUTSIDE THE BUILDING AREA TO RECEIVE FILL, EXTERIOR SLABS-ON-GRADE, SIDEWALKS, AND PAVING SHOULD BE OVEREXCAVATED TO A DEPTH OF (1)-FOOT BELOW FINISH SUBGRADE OR EXISTING GRADE, WHICHEVER IS DEEPER. THE EXPOSED SURFACE SHOULD BE SCARIFIED, MOISTURE CONDITIONED AND RECOMPACTED.

6.2.5 ON-SITE SOILS MAY BE USED FOR FILL ONCE THEY ARE CLEANED OF ALL ORGANIC MATERIAL, ROCK, DEBRIS AND IRREDUCIBLE MATERIAL LARGER THAN EIGHT (8)-INCHES.

6.2.6 ALTHOUGH NOT ENCOUNTERED IN OUR BORINGS, SHOULD BE ANY TRASH, DEBRIS, OR SUBSURFACE STRUCTURES BE ENCOUNTERED DURING GRADING, REMOVALS WILL BE NECESSARY TO ADEQUATE DEPTHS AND HORIZONTAL LIMITS AS RECOMMENDED BY THIS FIRM AT THE TIME OF GRADING.

6.2.7 GRADING INSPECTIONS SHOULD BE PERFORMED IN ACCORDANCE WITH THE 2016 CALIFORNIA BUILDING CODE TABLE 1705.6. SEE APPENDIX B FOR PROJECT SPECIFIC GRADING OBSERVATION REQUIREMENTS.

6.3: SLOPE CONSTRUCTION

6.3.1. ALL HILLSIDE GRADING AND CONSTRUCTION OF FILL SLOPES SHOULD CONFORM TO A MINIMUM STANDARDS LISTED IN CHAPTER 18 OF THE 2016 CBC. IT IS RECOMMENDED THAT A REPRESENTATIVE OF BEACON GEOTECHNICAL REVIEW THE GRADING PLANS PRIOR TO GRADING AND SITE DEVELOPMENT.

6.3.2 FILL SLOPES SHOULD BE KEYED AND BENCHED INTO FIRM NATURAL GROUND WHEN THE EXISTING SLOPE TO RECEIVE FILL IS 10:1, HORIZONTAL TO VERTICAL, OR STEEPER. THE KEYS SHOULD BE TILTED INTO THE SLOPE, SHOULD BE A MINIMUM OF ONE EQUIPMENT WIDTH WIDE, AND SHOULD EXTEND A MINIMUM OF (3)-FEET DEEP AT THE OUTSIDE EDGE OR (3)-FEET INTO THE TAN A2 MATERIAL (NOTED AS MATERIAL TYPE A2), WHICHEVER IS DEEPER.

6.3.3 FILL SLOPES SHOULD BE OVERFILLED, COMPACTED AND CUT BACK TO PLANNED CONFIGURATIONS. THIS WILL YIELD BETTER COMPACTION ON THE SLOPE FACES THAN OTHER METHODS.

6.3.4 LINED DRAINAGE SWALES AND DOWN DRAINS SHOULD BE PROVIDED AT THE TOPS OF ALL CUT AND FILL SLOPES TO DIVERT DRAINAGE AWAY FROM THE SLOPE FACES.

6.3.5 CUT AND FILL SLOPES SHOULD NOT BE CONSTRUCTED STEEPER THAN 2:1 (HORIZONTAL TO VERTICAL). SETBACKS OF STRUCTURES FROM SLOPES SHOULD BE MAINTAINED AS PER THE 2016 CBC.

NOTE: FOR ALL OTHER RECOMMENDATIONS AND REQUIREMENTS NOT STATED HERE, THE CONTRACTOR SHALL REVIEW THE SOILS REPORT PRIOR TO STARTING CONSTRUCTION. IF THE CONTRACTOR HAS ANY QUESTIONS, PLEASE CONTACT BEACON GEOTECHNICAL, INC.

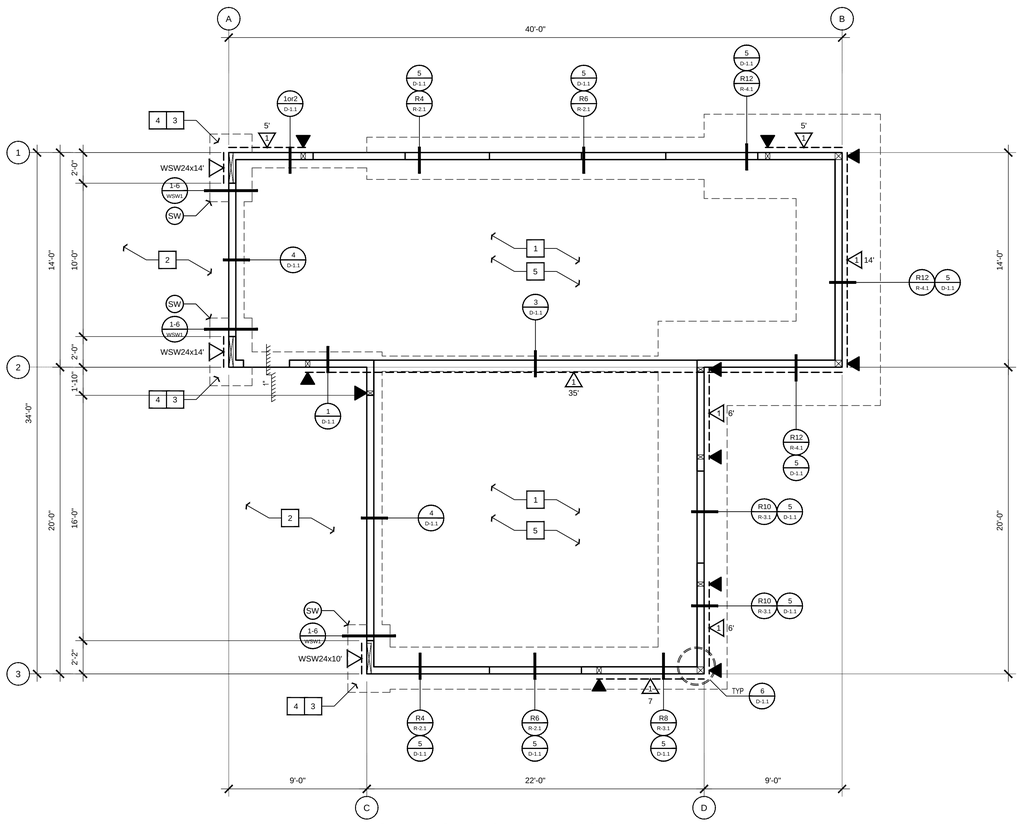

GARAGE FOUNDATION PLAN

1/4" = 1'

SHEAR WALL SCHEDULE

	SHEAR (plf)	MATERIAL	2 SIDES	NAILING (E.N. F.N.)	TOP PLATE CONNECTOR [1,2,3,4,5,6,7,8,9,10,11,12]	SILL PLATE NAILS [6] @ SUB-FLR	½" Ø A.B. [12] @ FND
1	280	15/32" OSB (ID# 24/0)	N	8d @ 6 - 12	RBC @ 18" o/c or LPT4 @ 24" o/c	16d @ 6" o/c	48" o/c
2	430	15/32" OSB (ID# 24/0)	N	8d @ 4 - 12	RBC @ 12" o/c or LPT4 @ 18" o/c	16d @ 4.5" o/c	40" o/c
3	550	15/32" OSB (ID# 24/0)	N	8d @ 3 - 12	RBC @ 8" o/c or LPT4 @ 12" o/c	16d @ 3.5" o/c	32" o/c
4	665	15/32" OSB (ID# 24/0)	N	10d @ 3 - 12	RBC @ 8" o/c or LPT4 @ 10" o/c	16d @ 3.0" o/c	26" o/c
5	870	15/32" OSB (ID# 24/0)	N	10d @ 2 - 12	RBC @ 6" o/c or LPT4 @ 8" o/c	SDWS0.22x6" SCREWS @ 6" O/C	20" o/c
6	1330	15/32" OSB (ID# 24/0)	Y	10d @ 3 - 12	LTP4 @ 5" o/c	(2)-Rows SDWS0.22x6" SCREWS @ 6" O/C	12" o/c
7	1740	15/32" OSB (ID# 24/0)	Y	10d @ 2 - 12	LTP4 @ 4" o/c	(2)-Rows SDWS0.22x6" SCREWS @ 6" O/C	10" o/c

FOOTNOTES:
1. All sheathing to be Struct I panel grade and fully blocked.
2. Refer to "Vertical Diaphragm Notes" for material and application specifications.
3. All nails specified are common. Where "air-gun" nailing is used, care shall be taken to use true common nail equivalents.
4. Provide 0.229" thick x 3" square, flat plate washers at all 5/8" diameter anchor bolts. Plate washer is required to be within 1/2" of plywood sheathing.
5. If referenced detail does NOT show A35's and only H1 clips at truss to top plate / beam connection, then H1 clips were designed to handle shear transfer and additional A35's are NOT required at that wall line. Only provide A35's when referenced detail shows them and calls out required spacing ---> See Footnote #12.
6. Use RBC @ 3x sill plate to rim joist or solid blocking with spacing per "Top Plate Connector".
7. Ok to use (1) A35 clip in lieu of (1) RBC as needed.
8. Studs shall be 3x minimum @ panel edges. Use 3x P.T.D.F. bottom plate for Shear Panel 6 & 7. Use 2x P.T.D.F. bottom plate for Shear Panels 1-5. Stagger nails @ double top plate and panel edges.
9. Stagger nails at opposite sides of wall.
10. Provide a double rim joist and stagger SDWS screws by 3".
11. Install LTP4 with 8d common nails only.
12. Apply A35 / LTP4'S per shearwall schedule for length of shearwall when referenced detail states "Per Shearwall Schedule." If referenced detail states A35 / LTP4'S at incremental spacing along "entire length of wall," the contractor shall provided them across entire length of wall and NOT just at shearwall. (No additional fasteners are required at shearwalls when detail references along entire length of wall)

HOLDOWN KEY

▼ = HDU2 W/ SBS/8x24. USE 4X6 D.F. #2 POST W/ HOLDOWN. SEE DETAIL (7/D-1.1)

HOLDOWN NOTES:
1. HOLDOWN ANCHORS MUST BE TIED IN PLACE PRIOR TO FOUNDATION INSPECTION AND RE-TIGHTENED JUST PRIOR TO COVERING THE WALL FRAMING.
2. HDU HOLDOWNS MAY BE INSTALLED 18" MAXIMUM ABOVE TOP OF CONCRETE.

SB HOLDOWN ANCHOR DETAIL

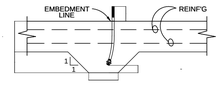

INCREASED FOOTING DEPTH AT SSTB HOLDOWN ANCHOR (WHERE APPLICABLE)

SOIL NOTE

SOILS EXPANSION INDEX: VERY LOW TO LOW
REPORT #: F-101663
BY: BEACON GEOTECHNICAL, INC.
DATED: SEPTEMBER 28, 2017

THE SOILS REPORT REFERENCED IS PART OF THESE PLANS AND ALL RECOMMENDATIONS THERE IN SHALL BE COMPLIED WITH.

CONCRETE NOTE

CONCRETE SLAB SHALL BE 4" THICK MINIMUM WITH #4 BARS @ 16" O/C. EACH WAY. SET REINFORCEMENT AT MID DEPTH OF SLAB. SLABS SHOULD BE UNDERLAIN WITH A MINIMUM OF FOUR (4) INCHES OF CLEAN AND FREE DRAINING SAND. AREAS WHERE FLOOR WETNESS WOULD BE UNDESIRABLE (LIVING - CONDITIONED SPACE) MUST BE UNDERLAIN WITH A 10-MIL MOISTURE BARRIER TO REDUCE MOISTURE TRANSMISSION FROM THE SUBGRADE SOILS TO THE SLAB. THE MEMBRANE SHOULD BE PLACED AT MID-HEIGHT IN THE CLEAN SAND.

FOOTINGS SHALL BE 12 INCHES WIDE X 18 INCHES DEEP WITH (2)-#4 BARS TOP AND BOTTOM UNLESS OTHERWISE NOTED ON FOUNDATION PLAN. WHERE DEEPENED FOOTINGS ARE REQUIRED BY GEOTECHNICAL ENGINEER OF RECORD SEE DETAIL (9/D-1.1). FOOTINGS AND / OR DEEPENED FOOTINGS SHALL EXTEND A MINIMUM OF (18)-INCHES INTO THE UNDERLYING MEDIUM DENSE TAN TO LIGHT BROWN MATERIALS, NOTED AS SOIL TYPES A2 AND A3 INT HE PROJECT BORING LOGS.

FOR STRUCTURES TO BE CONSTRUCTED ABOVE SLOPES, THE OUTSIDE FACES AT THE BOTTOM OF FOOTINGS SHOULD PROVIDE A MINIMUM HORIZONTAL DISTANCE OF TWENTY (20) FEET FOR THE SLOPE FACE.

ALWAYS CHECK FOUNDATION LEGEND FOR DIFFERENCES IN REBAR SIZES AND LOCATIONS. NOTE THAT DEPTH OF FOOTING SHALL BEGIN AT COMPETENT MATERIAL, WHICH MAY OR MAY NOT BE THE SAME AS FINISHED GRADE. USE #3 REINFORCEMENT BARS SET 3" MINIMUM ABOVE THE BOTTOM OF THE FOOTING AND BENT 3'-0" MINIMUM INTO SLAB.

FOUNDATION EXCAVATIONS SHOULD BE OBSERVED BY A REPRESENTATIVE OF BEACON GEOTECHNICAL, INC. AFTER EXCAVATION, BUT PRIOR TO PLACING REINFORCING STEEL OR FORMS.

PREMOISTENING CONTROL FOR SOILS UNDER FOOTINGS AND SLABS SHALL BE TO 120% OF OPTIMUM MOISTURE CONTENT TO A DEPTH OF 21" BELOW LOWEST GRADE, TESTING REQUIRED. AFTER PREMOISTENING, THE SPECIFIED MOISTURE CONTENT OF THE SOILS SHALL BE MAINTAINED UNTIL CONCRETE IS PLACED. REQUIRED MOISTURE CONTENT SHALL BE VERIFIED BY AN APPROVED TESTING LABORATORY NOT MORE THAN 24 HOURS PRIOR TO PLACEMENT OF CONCRETE.

CONCRETE SLABS SHALL BE SAW CUT 3/4" DEEP @ 15' O/C. GRIDS WITHIN 24 HOURS OF SLAB POUR.

STEPPED FOOTING REQUIREMENTS

THE CONTRACTOR SHALL NOTE THAT IF THE EXISTING GRADE SLOPES MORE THAN 10:1 (HORIZONTAL : VERTICAL) THEN STEPPED FOOTINGS PER DETAIL (9/D-1.1) MUST BE CONSTRUCTED. IF THE EXISTING SLOPE IS LESS THAN 10:1, THEN DETAIL (9/D-1.1) MAY BE OMITTED.

FOUNDATION NOTES:

1. STRENGTH OF CONCRETE AT 28 DAYS SHALL BE 2500 PSI MINIMUM.
2. ALL HOLDOWNS AND BRACKETS IN CONCRETE SHALL BE SET IN PLACE PRIOR TO FOUNDATION INSPECTION.
3. A COPY OF THE SOILS REPORT SHALL BE ON SITE DURING FOUNDATION INSPECTION.
4. VERIFY ALL HOLDOWNS AND ANCHOR BOLTS LOCATIONS WITH FLOOR PLAN.
5. THE SOILS ENGINEER SHALL INSPECT AND APPROVE THE FOUNDATION EXCAVATIONS BEFORE REQUESTING A BUILDING DIVISION FOUNDATION INSPECTION.
6. PRIOR TO CALLING FOR BUILDING DIVISION FOUNDATION INSPECTION, PRELIMINARY GRADING AND COMPACTION REPORTS SHALL BE SUBMITTED TO AND APPROVED BY THE BUILDING DIVISION GRADING INSPECTOR.
7. THE FASTENERS EMBEDDED IN CONCRETE SHALL BE ATTACHED TO, OR HOOKED AROUND, REINFORCING STEEL OR OTHERWISE TERMINATED TO EFFECTIVELY TRANSFER FORCES TO THE REINFORCING STEEL. (SEC 1633.2.4.2 #6)
8. HOLD DOWN DEVICES MUST BE SECURED IN PLACE PRIOR TO FOUNDATION INSPECTION.
9. SLABS SHALL BE SAW CUT 3/4" DEEP @ 15" O.C. GRIDS WITHIN 24 HOURS OF SLAB POUR.
10. PROVIDE FINAL SOILS REPORT PRIOR TO FOUNDATION INSPECTION. THIS REPORT SHALLCERTIFY THAT THE SOIL PREPARED IS TO THE PRELIMINARY SOIL REPORT AND THE SOIL CONDITION IS SUITABLE FOR THE PROPOSED STRUCTURE. THIS REPORT SHALL BE SIGNED AND WET STAMPED BY THE SOIL ENGINEER.
11. SOIL ENGINEER SHALL INSPECT ALL FOUNDATION EXCAVATIONS PRIOR TO CONCRETE POURING AND OBSERVE ALL REQUIRED MOISTURE CONDITIONS OF UNDER-SLAB AREAS.
12. PRIOR TO POURING FOUNDATION, A LICENSED PROFESSIONAL SHALL PERFORM A FOUNDATION PAD INSPECTION. A LETTER IS TO BE SENT TO THE PLAN CHECK DIVISION AND CERTIFY THAT THE CONSTRUCTION OF THE PAD IS TO THE SITE PLAN AND TO THE ARCHITECTURAL PLAN; AND NO DEVIATION FROM THE APPROVED PLANS.

FOUNDATION VERIFICATION LETTER REQ'D

PRIOR TO THE CONTRACTOR REQUESTING A BUILDING DEPARTMENT FOUNDATION INSPECTION, THE SOILS ENGINEER SHALL ADVISE THE BUILDING OFFICIAL IN WRITING THAT:
1. THE BUILDING PAD WAS PREPARED IN ACCORDANCE WITH THE SOILS REPORT.
2. THE UTILITY TRENCHES HAVE BEEN PROPERLY BACKFILLED AND COMPACTED.
3. THE FOUNDATION EXCAVATIONS COMPLY WITH THE INTENT OF THE SOILS REPORT.

ENGINEERING
239-4151
John A. Kudla
Civil Engineering &
Structural Design
R.C.E. #50652
610 10th ST. UNIT 'A' PASO
ROBLES, CA.

PLAN PREPARED FOR:
MICHAEL VELA
TR 1990-2, LOT 147
PASO ROBLES, CA 93446

REVISION LOG

REV.	DESCRIPTION	DATE

These drawings are the exclusive property of J.K. Engineering and shall be used solely for the purpose of this project on this site. Any use other than the project upon which it is intended for without the written consent of J.K. Engineering and John Kudla is prohibited.

PROJECT NO. ---

FILE NAME S-1.3 GARAGE FOUNDATION PLAN.DWG

DRAWN BY NFS

DATE 5/1/2019 11:33 AM

SHEET TITLE:
GARAGE FOUNDATION PLAN

SHEET NUMBER:
S-1.3

D:\jobs\dwg\PROJECTS\Architects\dwg\Vela\Vela\S-1.3 GARAGE FOUNDATION PLAN.dwg Mark Sheet by 05/14/2019 10:07:28 AM

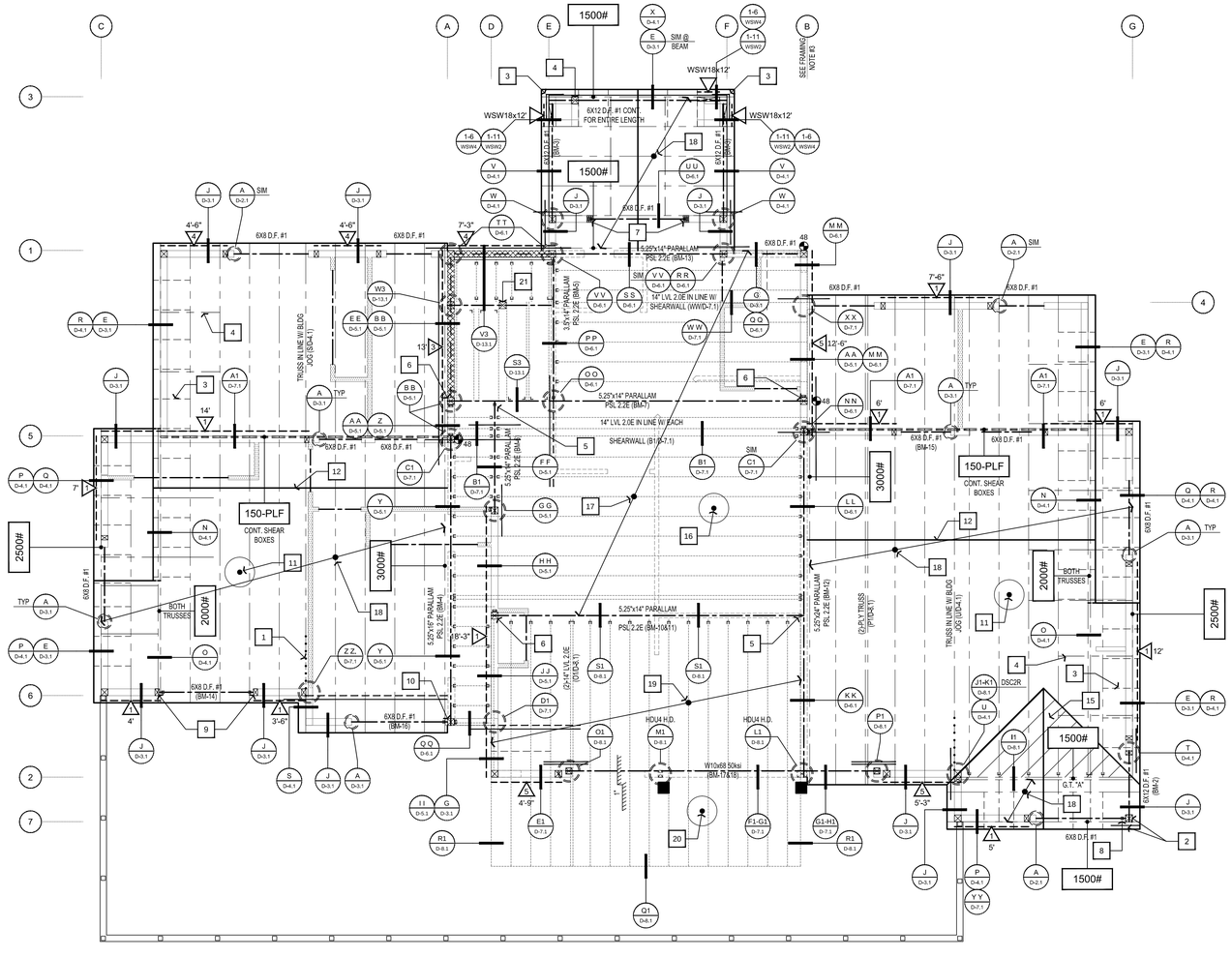

LOWER ROOF / UPPER FLOOR FRAMING PLAN

1/4" = 1'

FRAMING NOTES:

1. ALL HEADERS ABOVE OPENINGS SHALL BE A MINIMUM:
   6X8 D.F. #1 AT 2X6 D.F. #2 STUD WALLS (U.O.N.)
   ALL INTERIOR NON-BEARING HEADERS SHALL BE 4X8 D.F. #2 OR 6X8 D.F. #1.
   WINDOW / DOOR OPENING NOTE: ALL WINDOW / DOOR OPENINGS SHALL BE CONNECTED PER DETAIL (A/D-2.1) U.O.N.
2. ALL TOP PLATES TO HAVE 48" MIN. LAP AT SPLICES WITH **(20)-16d NAILS** STAGGERED PER LAP CONNECTION. NAILS SHALL BE INSTALLED VERTICALLY (PERPENDICULAR TO TOP PLATE). **(DO NOT INSTALL NAILS AT ANGLE)**
3. **LINE-B TOP PLATE SPLICE CONNECTION**: ALL TOP PLATES ALONG THESE WALL LINES SHALL HAVE 60" MIN. LAP AT SPLICES WITH **(40)-16d NAILS** STAGGERED PER LAP CONNECTION. NAILS SHALL BE INSTALLED VERTICALLY (PERPENDICULAR TO TOP PLATE). **(DO NOT INSTALL NAILS AT ANGLE)**
4. ALL LUMBER SHALL BE IDENTIFIED WITH THE GRADE MARK AND STAMP OF THE GRADING ASSOCIATION COVERING THE SPECIES AND UNDER WHOSE GRADING RULES THE LUMBER WAS PRODUCED.
5. THE MANUFACTURERS A.I.T.C. CERTIFICATION OF COMPLIANCE FOR GLU-LAM BEAMS OR MICRO-LAM BEAMS IS TO BE PROVIDED AT THE TIME OF FRAMING INSPECTION AND PROPERLY INDICATE THE FIBER BENDING AND GRADE SPECIFICATION.
6. PLACE SHEAR PANEL ON SHEAR WALLS PRIOR TO THE CONSTRUCTION OF INTERSECTING WALLS.
7. PROVIDE FIRE STOPS IN CONCEALED SPACES OF STUD WALLS INCLUDING SPACES AT CEILING AND FLOORS & IN OPENINGS AROUND DUCTS, PIPES, CHIMNEYS, AND SIMILAR OPENINGS WHICH ALLOW PASSAGE OF FIRE.
8. SHOWER COMPARTMENT AND WALLS ABOVE BATHTUBS WITH INSTALLED SHOWER HEADS SHALL BE FINISHED WITH A NONABSORBENT SURFACE TO A HEIGHT NOT LESS THAN 72" ABOVE THE FLOOR PER CRC R307.2. FIBER-CEMENT, FIBER-MAT REINFORCED CONCRETE, GLASS MAT GYPSUM BACKERS, OR FIBER-REINFORCED GYPSUM BACKERS SHALL BE USED AS A BASE FOR CERAMIC WALL TILES IN TUB AND SHOWER AREAS AS WELL AS WALL PANELS IN SHOWER AREAS PER CRC R702.4.2.
9. ALL COIL STRAPS ARE TO BE EVENLY DISTRIBUTED ONTO BOTH MEMBERS BEING CONNECTED. (U.O.N.)
10. ALL BEARING POST AT ANY GIVEN FLOOR LEVEL SHALL BE CONTINUOUS FROM POINT OF ORIGIN TO FOUNDATION. PROVIDE 4X SOLID BLOCKING AT FLOOR SYSTEM BETWEEN BEARING POST ABOVE AND BELOW. SEE FRAMING PLANS FOR 4X OR 6X BEARING POST LOCATIONS.
11. ALL COIL STRAPS ARE TO BE **FULLY NAILED** UNLESS OTHERWISE NOTED ON SPECIFIED DETAIL.

ENGINEERED ROOF TRUSS NOTES:

1. THE TRUSSES SHALL NOT BE INSTALLED UNTIL AN **APPROVED JOB COPY** OF THE TRUSS SUBMITTALS IS ISSUED BY THE APPROPRIATE CITY / COUNTY BUILDING DIVISION.
2. ALL TRUSS ENGINEERING, DRAWINGS, TRUSS TYPES, AND DETAILED SHOP DRAWINGS SHALL BE APPROVED BY THE PROJECT ENGINEER OR ARCHITECT PRIOR TO THE INSTALLATION OF THE TRUSSES.
3. TRUSS MEMBERS AND COMPONENTS SHALL **NOT** BE CUT, NOTCHED, DRILLED, OR OTHERWISE ALTERED IN ANY WAY WITHOUT WRITTEN CONCURRENCE AND APPROVAL OF A REGISTERED DESIGN PROFESSIONAL.
4. ALTERATIONS RESULTING IN THE ADDITION OF LOADS TO ANY MEMBER (E.G. HVAC EQUIPMENT, WATER HEATER) SHALL NOT BE PERMITTED WITHOUT VERIFICATION THAT THE TRUSS IS CAPABLE OF SUPPORTING SUCH ADDITIONAL LOADING.
5. TRUSS MANUFACTURER SHALL PROVIDE A TRUSS PLACEMENT DIAGRAM THAT IDENTIFIES THE PROPOSED LOCATION FOR EACH INDIVIDUALLY DESIGNATED TRUSS AND REFERENCE THE CORRESPONDING TRUSS DESIGN DRAWINGS (TO BE INCLUDED IN THE SUBMITTAL PACKAGE AND WITH THE SHIPMENT OF TRUSSES.)
6. ALL TRUSS DIMENSIONS SHALL BE VERIFIED IN FIELD PRIOR TO ORDERING AND MANUFACTURING OF TRUSSES. **EITHER THE CONTRACTOR OR TRUSS COMPANY IS RESPONSIBLE** TO GO TO THE FIELD AND MEASURING THE ACTUAL FRAMING DIMENSIONS PRIOR TO ORDERING TRUSSES.
7. TRUSS FABRICATOR SHALL BE APPROVED IN ACCORDANCE WITH CBC SECTION 1704.2. TRUSS FABRICATOR SHALL PROVIDE DOCUMENTATION TO JUSTIFY DURING SUBMITTAL; INCLUDING NAME AND PHONE NUMBER OF THE AGENCY INSPECTING THE SHOP OPERATIONS.
8. TRUSS MANUFACTURER SHALL PROVIDE REQUIRED TYPICAL OR INDUSTRY STANDARD NOTES AND DETAILS IN THE TRUSS PACKAGE REGARDING REQUIREMENTS FOR BRACING AND INSTALLATION OF TRUSSES.
9. TRUSS TO TRUSS CONNECTIONS SHALL BE SPECIFIED ON THE TRUSS DESIGN DRAWINGS.
10. EACH TRUSS SHALL BE LEGIBLY BRANDED, MARKED, OR OTHERWISE PERMANENTLY AFFIXED THERE TO THE FOLLOWING INFORMATION WITHIN TWO FEET OF THE CENTER OF THE BOTTOM CHCORD: **IDENTITY OF THE COMPANY MANUFACTURING THE TRUSS, THE DESIGN LOAD (AXIAL LOAD), AND THE SPACING OF TRUSSES**.
11. PLANS, DETAILS, AND CALCULATIONS SHALL BE REVIEWED BY THE JOB ARCHITECT / ENGINEER PRIOR TO SUBMITTAL TO THE CITY / COUNTY FOR APPROVAL.
12. ALL TRUSS CALCULATIONS AND DETAILS ARE TO BE PREPARED AND SIGNED BY A REGISTERED ARCHITECT / ENGINEER.

AXIAL LOADED TRUSSES

????#

ALL AXIAL LOADED TRUSSES TO BE IN LINE WITH SHEAR PANELS AS SHOWN ON FRAMING PLAN AND ROOF PLY TO BE NAILED WITH 8d NAILS @ 6 O.C. ALONG ENTIRE LENGTH OF TRUSS.
AT ALL AXIAL LOADED G.T.'S OR (2) PLY AXIAL LOADED TRUSSES **PROVIDE 8d @ 6" O/C FROM ROOF SHEATHING INTO BOTH TOP CHORD MEMBERS OF TRUSS**. STAGGER NAILS ON BOTH TOP CHORD MEMBERS AND NAIL FOR ENTIRE LENGTH OF TRUSS. (THEREFORE THERE SHOULD BE TWO ROWS OF 8d @ 6" O/C ALONG MULTI PLY TRUSS)

LWR RF / UPPER FLR FRM PLAN LEGEND

=	EXTERIOR WALLS: (PLATE HEIGHT = 9'-0")	2X6 D.F. #2 STUDS @ 16" O/C
=	INTERIOR NON-BEARING WALLS: PLUMBING WALLS: (PLATE HEIGHT = 9'-0")	2X4 D.F. #2 STUDS @ 16" O/C 2X6 D.F. #2 STUDS @ 16" O/C SEE DETAILS (C/D-3.1) & (D/D-3.1)
=	EXTERIOR BALLOON WALLS: (PLATE HEIGHT = 19'-3")	2X6 D.F. #2 STUDS @ 12" O/C
=	CALIFORNIA FRAMING:	SEE DETAIL (H/D-3.1)

SPECIAL INSPECTION REQUIRED

THE CONTRACTOR SHALL NOTE THAT SPECIAL INSPECTION IS REQUIRED FOR THIS PROJECT. FOR THE SPECIAL INSPECTIONS REQUIRED ON THIS PROJECT SEE THE SPECIAL INSPECTION NOTES ON SHEET S-1.3.

SHEAR WALL SCHEDULE

	SHEAR (plf)	MATERIAL	2 SIDES	NAILING (E.N. F.N.)	TOP PLATE CONNECTOR [1,2,3,4,5,6,7]	SILL PLATE NAILS [8] @ SUB-FLR	½" Ø A.B. [9,10] @ FND
1	280	15/32" OSB (ID# 24/0)	N	8d @ 6 - 12	RBC @ 18" o/c or LPT4 @ 24" o/c	16d @ 6" o/c	48" o/c
2	430	15/32" OSB (ID# 24/0)	N	8d @ 4 - 12	RBC @ 12" o/c or LPT4 @ 18" o/c	16d @ 4.5" o/c	40" o/c
3	550	15/32" OSB (ID# 24/0)	N	8d @ 3 - 12	RBC @ 8" o/c or LPT4 @ 12" o/c	16d @ 3.5" o/c	32" o/c
4	665	15/32" OSB (ID# 24/0)	N	10d @ 3 - 12	RBC @ 6" o/c or LPT4 @ 10" o/c	16d @ 3.0" o/c	26" o/c
5	870	15/32" OSB (ID# 24/0)	N	10d @ 2 - 12	RBC @ 6" o/c or LPT4 @ 8" o/c	SDWS0.22x6" SCREWS @ 6" O/C	20" o/c
6	1330	15/32" OSB (ID# 24/0)	Y	10d @ 3 - 12	LTP4 @ 5" o/c	(2)-Rows SDWS0.22x6" SCREWS @ 6" O/C	12" o/c
7	1740	15/32" OSB (ID# 24/0)	Y	10d @ 2 - 12	LTP4 @ 4" o/c	(2)-Rows SDWS0.22x6" SCREWS @ 6" O/C	10" o/c

FOOTNOTES:

1. All sheathing to be Struct I panel grade and fully blocked.
2. Refer to "Vertical Diaphragm Notes" for material and application specifications.
3. All nails specified are common. Where "air-gun" nailing is used, care shall be taken to use true common nail equivalents.
4. Provide 0.229" thick x 3" square, flat plate washers at all 5/8" diameter anchor bolts. Plate washer is required to be within 1/2" of plywood sheathing.
5. If referenced detail does NOT show A35's and only H1 clips at truss to top plate / beam connection, then H1 clips were designed to handle shear transfer and additional A35's are NOT required at that wall line. Only provide A35's when referenced detail shows them and calls out required spacing --> See Footnote #12.
6. Use RBC @ 3x sill plate to rim joist or solid blocking with spacing per "Top Plate Connector".
7. Ok to use (1) A35 clip in lieu of (1) RBC as needed.
8. Studs shall be 3x minimum @ panel edges. Use 3x P.T.D.F. bottom plate for Shear Panel 6 & 7. Use 2x P.T.D.F. bottom plate for Shear Panels 1-5. Stagger nails @ double top plate and panel edges.
9. Stagger nails at opposite sides of wall.
10. Provide a double rim joist and stagger SDWS screws by 3".
11. Install LTP4 with 8d common nails only.
12. Apply A35 / LTP4'S per shearwall schedule for length of shearwall when referenced detail states "Per Shearwall Schedule." If referenced detail states A35 / LTP4'S at incremental spacing along "entire length of wall," the contractor shall provided them across entire length of wall and NOT just at shearwall. (No additional fasteners are required at shearwalls when detail references along entire length of wall)

LWR RF / UP FLR FRMG PLAN CALLOUTS

1. PROVIDE 8d @ 6" O/C FOR 4'-0" MINIMUM ALONG TRUSS IN LINE W/ BUILDING JOG BEYOND JOG AND INTO MAIN ROOF DIAPHRAGM. SEE DETAIL (S/D-4.1)
2. 6X6 D.F. #1 POST W/ EPC6Z AT POST TO BEAM CONNECTION. ALSO PROVIDE CS16 STRAP 12" MINIMUM ONTO TOP PLATE AND EXTEND OUT AND BEND DOWN FACE OF 6X12 BEAM 6-INCHES MINIMUM FOR TOP PLATE SPLICE TIE.
3. CS16 STRAP 12" TO FACE OF BEAM. EXTEND STRAP OUT AND BEND AROUND CORNER AND STRAP 12" TO FACE OF PERPENDICULAR BEAM.
4. 6X6 D.F. #1 POST W/ EPC6Z AT POST TO BEAM CONNECTION.
5. HUC06Z HANGER AT BEAM TO BEAM CONNECTION.
6. 6X6 D.F. #1 POST UNDER FLOOR BEAM. CONNECT BEAM TO TOP OF TOP PLATE W/ HGA10.
7. DOUBLE 2X6 D.F. #2 KING STUDS REQUIRED AT DOOR / WINDOW OPENING. ATTACH BEARING TRIMMER STUD TO FIRST KING STUD PER DETAIL (B/D-3.1) AND ATTACH DOUBLE KING STUD PER DETAIL (B/D-3.1). PROVIDE A35 AT DOUBLE KING STUD TO TOP / SILL PLATE. SEE DETAIL (A/D-3.1) FOR ALL OTHER REQUIREMENTS.
8. HUC68 HANGER AT BEAM TO POST CONNECTION. 6X6 D.F. #1 CORNER POST SHALL BE CONTINUOUS TO BOTTOM OF 6X12 BEAM IN OPPOSITE DIRECTION. PROVIDE HGA10 AT POST TO SILL PLATE CONNECTION.
9. 4X6 D.F. #2 POST / SHEARWALL END POST SHALL BE CONTINUOUS FROM SILL PLATE TO TOP PLATE. PROVIDE A35 AT POST TO TOP / SILL PLATE CONNECTION (NOT REQ'D AT SILL PLATE IF HDU HOLDOWN SHOWN). HANG HEADERS TO POST W/ HUC68 HANGER.
10. 6X6 D.F. #1 POST / SHEARWALL END POST SHALL BE CONTINUOUS FROM SILL PLATE TO TOP PLATE. PROVIDE A35 AT POST TO TOP / SILL PLATE CONNECTION (NOT REQ'D AT SILL PLATE IF HDU HOLDOWN SHOWN). HANG HEADERS TO POST W/ HUC68 HANGER. PROVIDE HGA10 AT PARALLAM BEAM TO TOP PLATE CONNECTION ABOVE BEARING 6X6 D.F. #1 POST.
11. PROVIDE 5/8" APA RATED EXPOSURE-1 OSB RADIANT BARRIER ROOF SHEATHING (SPAN INDEX 40/20) WITH 8d @ 6" - 6" - 12". CASE 1 LAYOUT.
12. SOLID BLOCK AT RIDGE. (TYP)
13. 2X6 D.F. #2 FLAT OUTRIGGERS @ 24" O/C ON ALL GABLE ENDS.
14. 2X6 D.F. #2 OUT-OF-PLANE WALL BRACING @ 48" O/C. SEE DETAIL (E/D-3.1) OR OTHER REFERENCED DETAIL ON PLAN.
15. CALIFORNIA FRAMING. CONTINUE ROOF SHEATHING UNDER CALIFORNIA FRAMING AND SOLID BLOCK AT HIPS AND VALLEYS. PROVIDE 22" X 30" OPENING FOR ATTIC ACCESS AND ATTIC VENTILATION IN ROOF SHEATHING UNDER CALIFORNIA FRAMING. BLOCK OUT OPENING AND EDGE NAIL SHEATHING. SEE DETAIL (H/D-3.1)
16. USE 3/4" T&G APA RATED STURD-1 OSB PLY FLOOR SHEATHING (SPAN INDEX 48 / 24) GLUED AND NAILED WITH 10d AT 6" - 6" - 12" O/C **OR** SCREWED WITH SIMPSON QUIK DRIVE SCREWS (MODEL #: WSNTL212S - 2.5" LONG) AT 6" - 6" - 12" O/C (BOUNDARY - EDGE - FIELD) CASE 1 LAYOUT.
17. 14" TJI 360 FLOOR JOISTS @ 16" O/C.
18. PRE-ENGINEERED ROOF TRUSSES @ 24" O/C BY OTHERS.
19. 1.75"x14" MICROLAM LVL 2.0E FLOOR JOIST @ 16" O/C (BM-8 & 9). JOIST OK TO BE NOTCHED AT START OF DECK AND RIPPED 1/4" PER FOOT (SLOPE TO DRAIN). LVL HEIGHT REQUIRED TO BE 10.5" MINIMUM AT END OF CANTILEVER. CONTRACTOR SHALL USE GREAT CARE TO NOT OVER NOTCH DECK JOIST AT START OF CANTILEVER. PROVIDE FULL HEIGHT 1.5" LSL SOLID BLOCKING AT MIDSPAN OF JOIST.
20. USE 3/4" T&G APA RATED STURD-1 CDX PLY FLOOR SHEATHING AT EXTERIOR DECKS (SPAN INDEX 48 / 24) GLUED AND NAILED WITH 10d AT 6" - 6" - 12" O/C **OR** SCREWED WITH SIMPSON QUIK DRIVE SCREWS (MODEL #: WSNTL212S - 2.5" LONG) AT 6" - 6" - 12" O/C (BOUNDARY - EDGE - FIELD) CASE 1 LAYOUT.
21. 6X6 D.F. #1 POST FROM LANDING BEAM BELOW TO CANTILEVERED LANDING BEAM AT THIS FLOOR LEVEL. ATTACH POST TO BOTH BEAMS W/ PC6Z POST CAP. INVERT AT LOWER BEAM.

MST STRAPS

48 = MST 48 VERTICAL HOLDOWN STRAP BETWEEN FLOORS

ATTACH MST VERTICAL STRAPS TO **4X D.F. #2 POST ABOVE AND BELOW** THE FLOOR SYSTEM. SEE DETAIL (CC/D-5.1) FOR TYPICAL INSTALLATION OF VERTICAL MST.

HOLDOWN KEY

= HDU4 HOLDOWN.
USE 6X8 D.F. #1 CORNER SHEARWALL END POST & 4X6 D.F. #2 MID WALL SHEARWALL END POST.
USE SIMPSON ATS-SBC5H ROD TO STEEL BEAM CONNECTOR & CNW5/8 COUPLER NUT W/ ASTM F1554 GR. 36 ALL THREAD EXTENSION AS REQUIRED.
CORNER: SEE DETAIL (L1/D-8.1)
MID WALL: SEE DETAIL (M1/D-8.1)

ROOF FRAMING NOTES:

1. USE H-1 CLIPS AT EACH TRUSS / RAFTER TO TOP PLATE / BEAM CONNECTIONS.
2. USE H10A-2 CLIPS AT ALL (2)-PLY / G.T. / DBL RAFTER TO TOP PLATE / BEAM CONNECTIONS. IF G.T. IS LARGER THAN TWO PLY APPLY HGA10 AT G.T. TO TOP PLATE / BEAM CONNECTION.
3. WHERE H-1 CLIP DOES NOT FIT FOR STANDARD SINGLE PLY TRUSS PROVIDE H2.5A AT TRUSS TO TOP PLATE W/ A35 AT NEXT ADJACENT EAVE BLOCK TO TOP PLATE CONNECTION.
   ALTERNATE CONNECTION: PROVIDE HGA10 AT TRUSS TO TOP PLATE.
4. PROVIDE EAVE BLOCKS BETWEEN EACH TRUSS W/ 8d AT 6" O.C. AND PROVIDE VENT BLOCKS AT EVERY THIRD TRUSS IF APPLIES.
5. PROVIDE 5/8" APA RATED EXPOSURE-1 OSB RADIANT BARRIER ROOF SHEATHING (SPAN INDEX 40/20) WITH 8d @ 6" - 6" - 12". CASE 1 LAYOUT.
6. USE ⅝" "LP FLAMEBLOCK" SHEATHING AT EAVES W/ 6-6-12 NAILING AND CASE 1 LAYOUT. USE EXTERIOR GLUE AT ALL EXPOSED EAVES.
7. ROOF UNDER LAYMENT SHALL COMPLY WITH CBC 1507 AND APPLICABLE TABLES. USE 30# FELT UNDERNEATH ALL ROOF MATERIALS.
8. FASCIA TO BE 2X8 HEM FIR.
9. PROVIDE FLASHING AND COUNTER FLASHING AT ROOF TO WALL CONNECTIONS.
10. PROVIDE DIAGONAL BRACING AT GABLE ENDS AS PER TRUSS MANUFACTURER SPECIFICATIONS.
11. ALL GABLE END TRUSSES SHALL HAVE RADIANT BARRIER APPLIED TO BACK OF TRUSS.

ENGINEERING
239-4151
John A. Kudla
Civil Engineering &
Structural Design
R.C.E. #50652
610 10th ST. UNIT 'A' PASO ROBLES, CA.

PLAN PREPARED FOR:

MICHAEL VELA
TR 1990-2, LOT 147
PASO ROBLES, CA 93446

REVISION LOG

REV.	DESCRIPTION	DATE

These drawings are the exclusive property of J.K. Engineering and shall be used solely for the purpose of this project on this site. Any use other than the project upon which it is intended for without the written consent of J.K. Engineering and John Kudla is prohibited.

PROJECT NO. ----

FILE NAME S-2.1 LOWER FRAMING PLAN.DWG

DRAWN BY NFS

DATE 5/1/2019 11:33 AM

SHEET TITLE:

LOWER FRAMING PLAN

SHEET NUMBER:

S-2.1

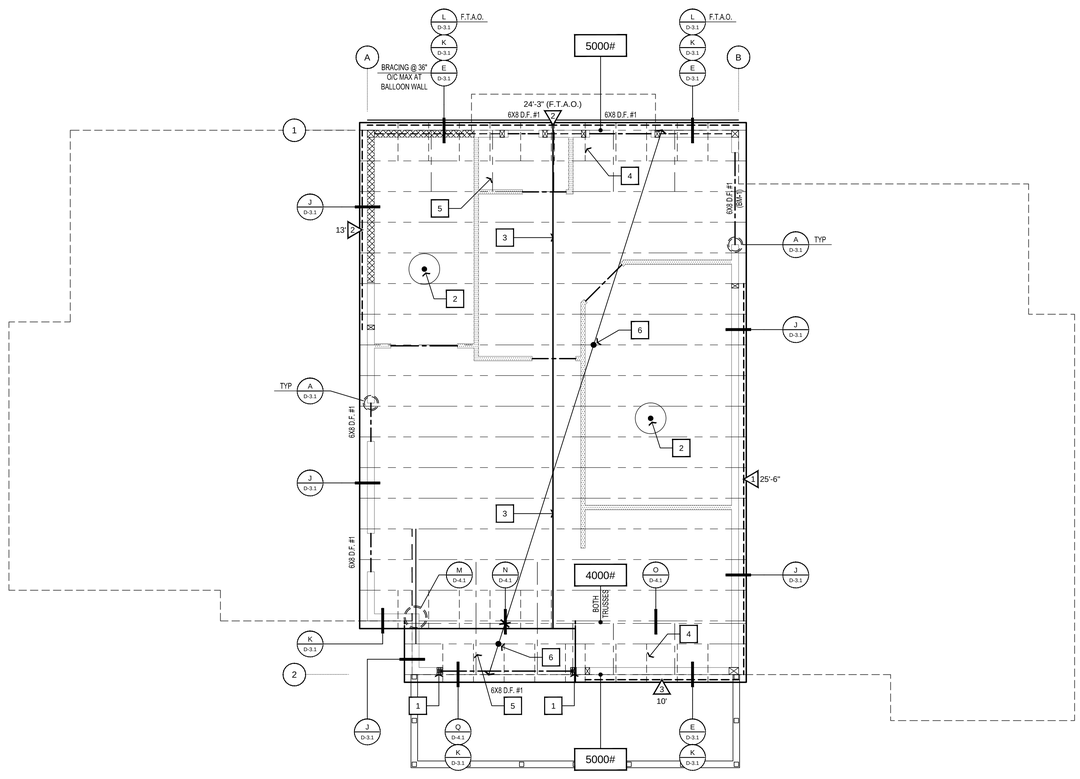

UPPER ROOF FRAMING PLAN

1/4" = 1'

ENGINEERED ROOF TRUSS NOTES:

1. THE TRUSSES SHALL NOT BE INSTALLED UNTIL AN **APPROVED JOB COPY** OF THE TRUSS SUBMITTALS IS ISSUED BY THE APPROPRIATE CITY / COUNTY BUILDING DIVISION.
2. ALL TRUSS ENGINEERING, DRAWINGS, TRUSS TYPES, AND DETAILED SHOP DRAWINGS SHALL BE APPROVED BY THE PROJECT ENGINEER OR ARCHITECT PRIOR TO THE INSTALLATION OF THE TRUSSES.
3. TRUSS MEMBERS AND COMPONENTS SHALL **NOT** BE CUT, NOTCHED, DRILLED, OR OTHERWISE ALTERED IN ANY WAY WITHOUT WRITTEN CONCURRENCE AND APPROVAL OF A REGISTERED DESIGN PROFESSIONAL.
4. ALTERATIONS RESULTING IN THE ADDITION OF LOADS TO ANY MEMBER (E.G. HVAC EQUIPMENT, WATER HEATER) SHALL NOT BE PERMITTED WITHOUT VERIFICATION THAT THE TRUSS IS CAPABLE OF SUPPORTING SUCH ADDITIONAL LOADING.
5. TRUSS MANUFACTURER SHALL PROVIDE A TRUSS PLACEMENT DIAGRAM THAT IDENTIFIES THE PROPOSED LOCATION FOR EACH INDIVIDUALLY DESIGNATED TRUSS AND REFERENCE THE CORRESPONDING TRUSS DESIGN DRAWINGS (TO BE INCLUDED IN THE SUBMITTAL PACKAGE AND WITH THE SHIPMENT OF TRUSSES.)
6. ALL TRUSS DIMENSIONS SHALL BE VERIFIED IN FIELD PRIOR TO ORDERING AND MANUFACTURING OF TRUSSES. **EITHER THE CONTRACTOR OR TRUSS COMPANY IS RESPONSIBLE** TO GO TO THE FIELD AND MEASURING THE ACTUAL FRAMING DIMENSIONS PRIOR TO ORDERING TRUSSES.
7. TRUSS FABRICATOR SHALL BE APPROVED IN ACCORDANCE WITH CBC SECTION 1704.2. TRUSS FABRICATOR SHALL PROVIDE DOCUMENTATION TO JUSTIFY DURING SUBMITTAL; INCLUDING NAME AND PHONE NUMBER OF THE AGENCY INSPECTING THE SHOP OPERATIONS.
8. TRUSS MANUFACTURER SHALL PROVIDE REQUIRED TYPICAL OR INDUSTRY STANDARD NOTES AND DETAILS IN THE TRUSS PACKAGE REGARDING REQUIREMENTS FOR BRACING AND INSTALLATION OF TRUSSES.
9. TRUSS TO TRUSS CONNECTIONS SHALL BE SPECIFIED ON THE TRUSS DESIGN DRAWINGS.
10. EACH TRUSS SHALL BE LEGIBLY BRANDED, MARKED, OR OTHERWISE PERMANENTLY AFFIXED THERE TO THE FOLLOWING INFORMATION WITHIN TWO FEET OF THE CENTER OF THE BOTTOM CHORD: **IDENTITY OF THE COMPANY MANUFACTURING THE TRUSS, THE DESIGN LOAD (AXIAL LOAD), AND THE SPACING OF TRUSSES**.
11. PLANS, DETAILS, AND CALCULATIONS SHALL BE REVIEWED BY THE JOB ARCHITECT / ENGINEER PRIOR TO SUBMITTAL TO THE CITY / COUNTY FOR APPROVAL.
12. ALL TRUSS CALCULATIONS AND DETAILS ARE TO BE PREPARED AND SIGNED BY A REGISTERED ARCHITECT / ENGINEER.

AXIAL LOADED TRUSSES

????#

ALL AXIAL LOADED TRUSSES TO BE IN LINE WITH SHEAR PANELS AS SHOWN ON FRAMING PLAN AND ROOF PLY TO BE NAILED WITH 8d NAILS @ 6 O.C. ALONG ENTIRE LENGTH OF TRUSS.
AT ALL AXIAL LOADED G.T.'S OR (2) PLY AXIAL LOADED TRUSSES **PROVIDE 8d @ 6" O/C FROM ROOF SHEATHING INTO BOTH TOP CHORD MEMBERS OF TRUSS**. STAGGER NAILS ON BOTH TOP CHORD MEMBERS AND NAIL FOR ENTIRE LENGTH OF TRUSS. (THEREFORE THERE SHOULD BE TWO ROWS OF 8d @ 6" O/C ALONG MULTI PLY TRUSS)

PROJECT DESIGN CRITERIA

GOVERNING BUILDING CODE			
2016 CALIFORNIA RESIDENTIAL CODE			
2016 CALIFORNIA BUILDING CODE			
GENERAL PARAMETERS			
CONSTRUCTION TYPE	TYPE V-B		
NUMBER OF STORIES	3		
MAX HEIGHT (ABV. GRADE)	33'-0"		
ROOF - (LIVING)	DL / LR	29 / 20	PSF
ROOF - (ENTRY PORCH)	DL / LR	30 / 20	PSF
FLOOR - WOOD	DL / L	17 / 40	PSF
FLOOR - TILE	DL / L	22 / 40	PSF
DECK	DL / L	22 / 60	PSF
WALLS - EXTERIOR	DL	18	PSF
WALLS - INTERIOR	DL	8	PSF
GEOTECHNICAL PARAMETERS			
BEARING PRESSURE	1850	PSF	
WIND / SEISMIC BEARING PRESSURE	2466	PSF	
LATERAL PASSIVE PRESSURE	325	PCF	
EFP (REST / ACTIVE)	60 / 40	PCF	
FRICTION COEFFICIENT	0.33		
WIND DESIGN PARAMETERS			
DESIGN PROCEDURE	SIMPLIFIED		
BASIC WIND SPEED	110 MPH		
EXPOSURE	B		
RISK CATEGORY	II		
INTERNAL PRESSURE COEFF.	N/A		
DESIGN LATERAL WIND PRESSURE	15.18 PSF (ZONE - A)		
DESIGN VERTICAL WIND PRESSURE	14.55 PSF (ZONE - E)		
SEISMIC DESIGN PARAMETERS			
DESIGN PROCEDURE	EQUIV. FORCE		
SITE CLASS	D		
IMPORTANCE FACTOR	1.00		
OCCUPANCY CATEGORY	II		
MAPPED SPECTRAL RESPONSE	SS = 1.317	S1 = 0.4753	
SPECTRAL RESPONSE COEFFICIENT	SDS = 0.878	SD1 = 0.483	
SEISMIC DESIGN CATEGORY	SDC = D		
SEISMIC FORCE RESISTING SYSTEM	WOOD STRUCTURAL RATED PANEL		
RESPONSE MODIFICATION FACTOR	R = 6.5		
DESIGN BASE SHEAR	0.13W		
ANALYSIS PROCEDURE USED	ASD		

SHEAR WALL SCHEDULE

	SHEAR (psf)	MATERIAL	2 SIDES	NAILING (E.N. F.N.)	TOP PLATE CONNECTOR [1,2,3]	SILL PLATE NAILS [6] @ SUB-FLR	½" Ø A.B. [4,5] @ FND
1	280	15/32" OSB (ID# 24/0)	N	8d @ 6 - 12	RBC @ 18" o/c or LPT4 @ 24" o/c	16d @ 6" o/c	48" o/c
2	430	15/32" OSB (ID# 24/0)	N	8d @ 4 - 12	RBC @ 12" o/c or LPT4 @ 16" o/c	16d @ 4.5" o/c	40" o/c
3	550	15/32" OSB (ID# 24/0)	N	8d @ 3 - 12	RBC @ 8" o/c or LPT4 @ 12" o/c	16d @ 3.5" o/c	32" o/c
4	665	15/32" OSB (ID# 24/0)	N	10d @ 3 - 12	RBC @ 8" o/c or LPT4 @ 10" o/c	16d @ 3.0" o/c	26" o/c
5	870	15/32" OSB (ID# 24/0)	N	10d @ 2 - 12	RBC @ 6" o/c or LPT4 @ 8" o/c	SDWS0.22x6" SCREWS @ 6" O/C	20" o/c
5 U.N.	1330	15/32" OSB (ID# 24/0)	Y	10d @ 3 - 12	LTP4 @ 5" o/c	(2)-Rows SDWS0.22x6" SCREWS @ 6" O/C	12" o/c
5 U.N.	1740	15/32" OSB (ID# 24/0)	Y	10d @ 2 - 12	LTP4 @ 4" o/c	(2)-Rows SDWS0.22x6" SCREWS @ 6" O/C	10" o/c

FOOTNOTES:

1. All sheathing to be Struct I panel grade and fully blocked.
2. Refer to "Vertical Diaphragm Notes" for material and application specifications.
3. All nails specified are common. Where "air-gun" nailing is used, care shall be taken to use true common nail equivalents.
4. Provide 0.229" thick x 3" square, flat plate washers at all 5/8" diameter anchor bolts. Plate washer is required to be within 1/2" of plywood sheathing.
5. If referenced detail does NOT show A35's and only H1 clips at truss to top plate / beam connection, then H1 clips were designed to handle shear transfer and additional A35's are NOT required at that wall line. Only provide A35's when referenced detail shows them and calls out required spacing --> See Footnote #12.
6. Use RBC @ 3x sill plate to rim joist or solid blocking with spacing per "Top Plate Connector".
7. Ok to use (1) A35 clip in lieu of (1) RBC as needed.
8. Studs shall be 3x minimum @ panel edges. Use 3x P.T.D.F. bottom plate for Shear Panel 6 & 7. Use 2x P.T.D.F. bottom plate for Shear Panels 1-5. Stagger nails @ double top plate and panel edges.
9. Stagger nails at opposite sides of wall.
10. Provide a double rim joist and stagger SDWS screws by 3".
11. Install LTP4 with 8d common nails only.
12. Apply A35 / LTP4'S per shearwall schedule for length of shearwall when referenced detail states "Per Shearwall Schedule." If referenced detail states A35 / LTP4'S at incremental spacing along "entire length of wall," the contractor shall provided them across entire length of wall and NOT just at shearwall. (No additional fasteners are required at shearwalls when detail references along entire length of wall)

UPPER ROOF FRAMING PLAN CALLOUTS

1. DOUBLE 2X6 D.F. #2 KING STUDS REQUIRED AT DOOR / WINDOW OPENING. ATTACH BEARING TRIMMER STUD TO FIRST KING STUD PER DETAIL (B/D-3.1) AND ATTACH DOUBLE KING STUD PER DETAIL (B/D-3.1). PROVIDE A35 AT DOUBLE KING STUD TO TOP / SILL PLATE. SEE DETAIL (A/D-3.1) FOR ALL OTHER REQUIREMENTS.
2. PROVIDE 5/8" APA RATED EXPOSURE-1 OSB RADIANT BARRIER ROOF SHEATHING (SPAN INDEX 40/20) WITH 8d @ 6" - 6" - 12". CASE 1 LAYOUT.
3. SOLID BLOCK AT RIDGE. (TYP)
4. 2X6 D.F. #2 FLAT OUTRIGGERS @ 24" O/C ON ALL GABLE ENDS.
5. 2X6 D.F. #2 OUT-OF-PLANE WALL BRACING @ 48" O/C. SEE DETAIL (E/D-3.1) OR OTHER REFERENCED DETAIL ON FRAMING PLAN.
6. PRE-ENGINEERED ROOF TRUSSES @ 24" O/C BY OTHERS.

ROOF FRAMING NOTES:

1. USE H-1 CLIPS AT EACH TRUSS / RAFTER TO TOP PLATE / BEAM CONNECTIONS.
2. USE H10A-2 CLIPS AT ALL (2)-PLY / G.T. / DBL RAFTER TO TOP PLATE / BEAM CONNECTIONS. IF G.T. IS LARGER THAN TWO PLY APPLY HGA10 AT G.T. TO TOP PLATE / BEAM CONNECTION.
3. WHERE H-1 CLIP DOES NOT FIT FOR STANDARD SINGLE PLY TRUSS PROVIDE H2.5A AT TRUSS TO TOP PLATE W/ A35 AT NEXT ADJACENT EAVE BLOCK TO TOP PLATE CONNECTION.
   ALTERNATE CONNECTION: PROVIDE HGA10 AT TRUSS TO TOP PLATE.
4. PROVIDE EAVE BLOCKS BETWEEN EACH TRUSS W/ 8d AT 6" O.C. AND PROVIDE VENT BLOCKS AT EVERY THIRD TRUSS IF APPLIES.
5. PROVIDE 5/8" APA RATED EXPOSURE-1 OSB RADIANT BARRIER ROOF SHEATHING (SPAN INDEX 40/20) WITH 8d @ 6" - 6" - 12". CASE 1 LAYOUT.
6. USE ⅝"- "LP FLAMEBLOCK" SHEATHING AT EAVES W/ 6-6-12 NAILING AND CASE 1 LAYOUT. USE EXTERIOR GLUE AT ALL EXPOSED EAVES.
7. ROOF UNDER LAYMENT SHALL COMPLY WITH CBC 1507 AND APPLICABLE TABLES. USE 30# FELT UNDERNEATH ALL ROOF MATERIALS.
8. FASCIA TO BE 2X8 HEM FIR.
9. PROVIDE FLASHING AND COUNTER FLASHING AT ROOF TO WALL CONNECTIONS.
10. PROVIDE DIAGONAL BRACING AT GABLE ENDS AS PER TRUSS MANUFACTURER SPECIFICATIONS.
11. ALL GABLE END TRUSSES SHALL HAVE RADIANT BARRIER APPLIED TO BACK OF TRUSS.

FRAMING NOTES:

1. ALL HEADERS ABOVE OPENINGS SHALL BE A MINIMUM:
   6X8 D.F. #1 AT 2X6 D.F. #2 STUD WALLS (U.O.N.)
   ALL INTERIOR NON-BEARING HEADERS SHALL BE 4X8 D.F. #2
   OR 6X8 D.F. #1.
   WINDOW / DOOR OPENING NOTE: ALL WINDOW / DOOR OPENINGS SHALL BE CONNECTED PER DETAIL (A/D-3.1) U.O.N.
2. ALL TOP PLATES TO HAVE 48" MIN. LAP AT SPLICES WITH **(18)-16d NAILS** STAGGERED PER LAP CONNECTION. NAILS SHALL BE INSTALLED VERTICALLY (PERPENDICULAR TO TOP PLATE). (**DO NOT INSTALL NAILS AT ANGLE**)
3. ALL LUMBER SHALL BE IDENTIFIED WITH THE GRADE MARK AND STAMP OF THE GRADING ASSOCIATION COVERING THE SPECIES AND UNDER WHOSE GRADING RULES THE LUMBER WAS PRODUCED.
4. PLACE SHEAR PANEL ON SHEAR WALLS PRIOR TO THE CONSTRUCTION OF INTERSECTING WALLS.
5. PROVIDE FIRE STOPS IN CONCEALED SPACES OF STUD WALLS INCLUDING SPACES AT CEILING AND FLOORS & IN OPENINGS AROUND DUCTS, PIPES, CHIMNEYS, AND SIMILAR OPENINGS WHICH ALLOW PASSAGE OF FIRE.
6. SHOWER COMPARTMENT AND WALLS ABOVE BATHTUBS WITH INSTALLED SHOWER HEADS SHALL BE FINISHED WITH A NONABSORBENT SURFACE TO A HEIGHT NOT LESS THAN 72" ABOVE THE FLOOR PER CRC R307.2. FIBER-CEMENT, FIBER-MAT REINFORCED CONCRETE, GLASS MAT GYPSUM BACKERS, OR FIBER-REINFORCED GYPSUM BACKERS SHALL BE USED AS A BASE FOR CERAMIC WALL TILES IN TUB AND SHOWER AREAS AS WELL AS WALL PANELS IN SHOWER AREAS PER CRC R702.4.2.
7. ALL COIL STRAPS ARE TO BE EVENLY DISTRIBUTED ONTO BOTH MEMBERS BEING CONNECTED. (U.O.N.)
8. ALL BEARING POST AT ANY GIVEN FLOOR LEVEL SHALL BE CONTINUOUS FROM POINT OF ORIGIN TO FOUNDATION. PROVIDE 4X SOLID BLOCKING AT FLOOR SYSTEM BETWEEN BEARING POST ABOVE AND BELOW. SEE FRAMING PLANS FOR 4X OR 6X BEARING POST LOCATIONS.
9. ALL COIL STRAPS ARE TO BE **FULLY NAILED** UNLESS OTHERWISE NOTED ON SPECIFIED DETAIL.

UPPER ROOF FRAMING PLAN LEGEND

——— =	EXTERIOR WALLS: (PLATE HEIGHT = 9'-0")	2X6 D.F. #2 STUDS @ 16" O/C
——— =	INTERIOR NON-BEARING WALLS: PLUMBING WALLS: (PLATE HEIGHT = 9'-0")	2X4 D.F. #2 STUDS @ 16" O/C 2X6 D.F. #2 STUDS @ 16" O/C SEE DETAILS (C/D-3.1) & (D/D-3.1)
=	EXTERIOR BALLOON WALLS: (PLATE HEIGHT = 19'-3")	2X6 D.F. #2 STUDS @ 12" O/C

SPECIAL INSPECTION REQUIRED

THE CONTRACTOR SHALL NOTE THAT SPECIAL INSPECTION IS REQUIRED FOR THIS PROJECT. FOR THE SPECIAL INSPECTIONS REQUIRED ON THIS PROJECT SEE THE SPECIAL INSPECTION NOTES ON SHEET S-1.3.

ENGINEERING
239-4151
John A. Kudla
Civil Engineering &
Structural Design
R.C.E. #50652
610 10th ST. UNIT 'A' PASO
ROBLES, CA.

PLAN PREPARED FOR:

MICHAEL VELA
TR 1990-2, LOT 147
PASO ROBLES, CA 93446

REVISION LOG

REV.	DESCRIPTION	DATE

These drawings are the exclusive property of J.K. Engineering and shall be used solely for the purpose of this project on this site. Any use other than the project upon which it is intended for without the written consent of J.K. Engineering and John Kudla is prohibited.

PROJECT NO. ----

FILE NAME S-2.2 UPPER FRAMING PLAN.DWG

DRAWN BY NFS

DATE 5/1/2019 11:33 AM

SHEET TITLE:

UPPER
FRAMING PLAN

SHEET NUMBER:

S-2.2

B:\drafting\PROJECT\Michael\Building\Sheets\S-2.2 UPPER FRAMING PLAN.dwg, Nick Sowinsky 8/14/2018 8:45:19 AM

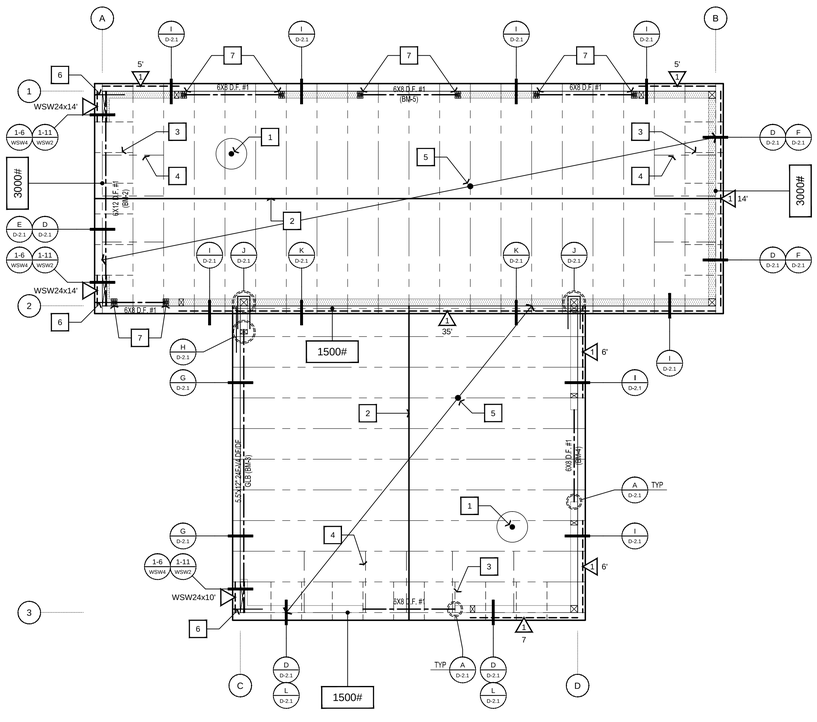

GARAGE ROOF FRAMING PLAN

1/4" = 1'

ENGINEERED ROOF TRUSS NOTES:

1. THE TRUSSES SHALL NOT BE INSTALLED UNTIL AN **APPROVED JOB COPY** OF THE TRUSS SUBMITTALS IS ISSUED BY THE APPROPRIATE CITY / COUNTY BUILDING DIVISION.
2. ALL TRUSS ENGINEERING, DRAWINGS, TRUSS TYPES, AND DETAILED SHOP DRAWINGS SHALL BE APPROVED BY THE PROJECT ENGINEER OR ARCHITECT PRIOR TO THE INSTALLATION OF THE TRUSSES.
3. TRUSS MEMBERS AND COMPONENTS SHALL **NOT** BE CUT, NOTCHED, DRILLED, OR OTHERWISE ALTERED IN ANY WAY WITHOUT WRITTEN CONCURRENCE AND APPROVAL OF A REGISTERED DESIGN PROFESSIONAL.
4. ALTERATIONS RESULTING IN THE ADDITION OF LOADS TO ANY MEMBER (E.G. HVAC EQUIPMENT, WATER HEATER) SHALL NOT BE PERMITTED WITHOUT VERIFICATION THAT THE TRUSS IS CAPABLE OF SUPPORTING SUCH ADDITIONAL LOADING.
5. TRUSS MANUFACTURER SHALL PROVIDE A TRUSS PLACEMENT DIAGRAM THAT IDENTIFIES THE PROPOSED LOCATION FOR EACH INDIVIDUALLY DESIGNATED TRUSS AND REFERENCE THE CORRESPONDING TRUSS DESIGN DRAWINGS (TO BE INCLUDED IN THE SUBMITTAL PACKAGE AND WITH THE SHIPMENT OF TRUSSES.)
6. ALL TRUSS DIMENSIONS SHALL BE VERIFIED IN FIELD PRIOR TO ORDERING AND MANUFACTURING OF TRUSSES. **EITHER THE CONTRACTOR OR TRUSS COMPANY IS RESPONSIBLE** TO GO TO THE FIELD AND MEASURING THE ACTUAL FRAMING DIMENSIONS PRIOR TO ORDERING TRUSSES.
7. TRUSS FABRICATOR SHALL BE APPROVED IN ACCORDANCE WITH CBC SECTION 1704.2. TRUSS FABRICATOR SHALL PROVIDE DOCUMENTATION TO JUSTIFY DURING SUBMITTAL; INCLUDING NAME AND PHONE NUMBER OF THE AGENCY INSPECTING THE SHOP OPERATIONS.
8. TRUSS MANUFACTURER SHALL PROVIDE REQUIRED TYPICAL OR INDUSTRY STANDARD NOTES AND DETAILS IN THE TRUSS PACKAGE REGARDING REQUIREMENTS FOR BRACING AND INSTALLATION OF TRUSSES.
9. TRUSS TO TRUSS CONNECTIONS SHALL BE SPECIFIED ON THE TRUSS DESIGN DRAWINGS.
10. EACH TRUSS SHALL BE LEGIBLY BRANDED, MARKED, OR OTHERWISE PERMANENTLY AFFIXED THERE TO THE FOLLOWING INFORMATION WITHIN TWO FEET OF THE CENTER OF THE BOTTOM CHORD: **IDENTITY OF THE COMPANY MANUFACTURING THE TRUSS, THE DESIGN LOAD (AXIAL LOAD), AND THE SPACING OF TRUSSES**.
11. PLANS, DETAILS, AND CALCULATIONS SHALL BE REVIEWED BY THE JOB ARCHITECT / ENGINEER PRIOR TO SUBMITTAL TO THE CITY / COUNTY FOR APPROVAL.
12. ALL TRUSS CALCULATIONS AND DETAILS ARE TO BE PREPARED AND SIGNED BY A REGISTERED ARCHITECT / ENGINEER.

PROJECT DESIGN CRITERIA

GOVERNING BUILDING CODE
2016 CALIFORNIA RESIDENTIAL CODE
2016 CALIFORNIA BUILDING CODE

GENERAL PARAMETERS			
CONSTRUCTION TYPE	TYPE V-B		
NUMBER OF STORIES	1		
MAX HEIGHT (ABV. GRADE)	17'-0"		
ROOF	DL / LR	25 / 20	PSF
ROOF (OVERHANG)	DL / LR	29 / 20	PSF
WALLS - EXTERIOR	DL	18	PSF
WALLS - INTERIOR	DL	8	PSF

GEOTECHNICAL PARAMETERS		
BEARING PRESSURE	1850	PSF
WIND / SEISMIC BEARING PRESSURE	2466	PSF
LATERAL PASSIVE PRESSURE	325	PCF
EFP (REST / ACTIVE)	60 / 40	PCF
FRICTION COEFFICIENT	0.33	

WIND DESIGN PARAMETERS	
DESIGN PROCEDURE	SIMPLIFIED
BASIC WIND SPEED	110 MPH
EXPOSURE	B
RISK CATEGORY	II
INTERNAL PRESSURE COEFF.	N/A
DESIGN LATERAL WIND PRESSURE	14.46 PSF (ZONE - A)
DESIGN VERTICAL WIND PRESSURE	13.86 PSF (ZONE - E)

SEISMIC DESIGN PARAMETERS		
DESIGN PROCEDURE	EQUIV. FORCE	
SITE CLASS	D	
IMPORTANCE FACTOR	1.00	
OCCUPANCY CATEGORY	II	
MAPPED SPECTRAL RESPONSE	SS = 1.317	S1 = 0.4753
SPECTRAL RESPONSE COEFFICIENT	SDS = 0.878	SD1 = 0.483
SEISMIC DESIGN CATEGORY	SDC = D	
SEISMIC FORCE RESISTING SYSTEM	WOOD STRUCTURAL RATED PANEL	
RESPONSE MODIFICATION FACTOR	R = 6.5	
DESIGN BASE SHEAR	0.13W	
ANALYSIS PROCEDURE USED	ASD	

SHEAR WALL SCHEDULE

	SHEAR (plf)	MATERIAL	2 SIDES	NAILING (E.N. F.N.)	TOP PLATE CONNECTOR [1]	SILL PLATE NAILS [2] @ SUB-FLR	½"-Ø A.B.[3] @ FND
1	280	15/32" OSB (ID# 24/0)	N	8d @ 6 - 12	RBC @ 16" o/c or LPT4 @ 24" o/c	16d @ 6" o/c	48" o/c
2	430	15/32" OSB (ID# 24/0)	N	8d @ 4 - 12	RBC @ 12" o/c or LPT4 @ 16" o/c	16d @ 4.5" o/c	40" o/c
3	550	15/32" OSB (ID# 24/0)	N	8d @ 3 - 12	RBC @ 8" o/c or LPT4 @ 12" o/c	16d @ 3.5" o/c	32" o/c
4	665	15/32" OSB (ID# 24/0)	N	10d @ 3 - 12	RBC @ 8" o/c or LPT4 @ 10" o/c	16d @ 3.0" o/c	26" o/c
5	870	15/32" OSB (ID# 24/0)	N	10d @ 2 - 12	RBC @ 6" o/c or LPT4 @ 8" o/c	SDWS0.22x6" SCREWS @ 6" O/C	20" o/c
4 & 5	1330	15/32" OSB (ID# 24/0)	Y	10d @ 3 - 12	LTP4 @ 5" o/c	(2)-Rows SDWS0.22x6" SCREWS @ 6" O/C	12" o/c
3 & 5	1740	15/32" OSB (ID# 24/0)	Y	10d @ 2 - 12	LTP4 @ 4" o/c	(2)-Rows SDWS0.22x6" SCREWS @ 6" O/C	10" o/c

FOOTNOTES:

1. All sheathing to be Struct I panel grade and fully blocked.
2. Refer to "Vertical Diaphragm Notes" for material and application specifications.
3. All nails specified are common. Where "air-gun" nailing is used, care shall be taken to use true common nail equivalents.
4. Provide 0.229" thick x 3" square, flat plate washers at all 5/8" diameter anchor bolts. Plate washer is required to be within 1/2" of plywood sheathing.
5. If referenced detail does NOT show A35's and only H1 clips at truss to top plate / beam connection, then H1 clips were designed to handle shear transfer and additional A35's are NOT required at that wall line. Only provide A35's when referenced detail shows them and calls out required spacing --> See Footnote #12.
6. Use RBC @ 3x sill plate to rim joist or solid blocking with spacing per "Top Plate Connector".
7. Ok to use (1) A35 clip in lieu of (1) RBC as needed.
8. Studs shall be 3x minimum @ panel edges. Use 3x P.T.D.F. bottom plate for Shear Panel 6 & 7. Use 2x P.T.D.F. bottom plate for Shear Panels 1-5. Stagger nails @ double top plate and panel edges.
9. Stagger nails at opposite sides of wall.
10. Provide a double rim joist and stagger SDWS screws by 3".
11. Install LTP4 with 8d common nails only.
12. Apply A35 / LTP4'S per shearwall schedule for length of shearwall when referenced detail states "Per Shearwall Schedule." If referenced detail states A35 / LTP4'S at incremental spacing along "entire length of wall," the contractor shall provided them across entire length of wall and NOT just at shearwall. (No additional fasteners are required at shearwalls when detail references along entire length of wall)

ROOF FRAMING PLAN CALLOUTS

1. PROVIDE 5/8" APA RATED EXPOSURE-1 OSB RADIANT BARRIER ROOF SHEATHING (SPAN INDEX 40/20) WITH 8d @ 6" - 6" - 12". CASE 1 LAYOUT.
2. SOLID BLOCK AT RIDGE. (TYP)
3. 2X6 D.F. #2 FLAT OUTRIGGERS @ 24" O/C ON ALL GABLE ENDS. (BM-1)
4. 2X6 D.F. #2 OUT-OF-PLANE WALL BRACING @ 48" O/C. SEE DETAIL (E/D-2.1)
5. PRE-ENGINEERED ROOF TRUSSES @ 24" O/C BY OTHERS.
6. CS16 STRAP 12-INCHES ON TOP OF TOP PLATE. EXTEND STRAP OUT 6-INCHES MINIMUM AND STRAP DOWN FACE OF GARAGE HEADER.
7. DOUBLE 2X6 D.F. #2 KING STUDS REQUIRED AT DOOR / WINDOW OPENING. ATTACH BEARING TRIMMER STUD TO FIRST KING STUD PER DETAIL (B/D-2.1) AND ATTACH DOUBLE KING STUD PER DETAIL (B/D-2.1). PROVIDE A35 AT DOUBLE KING STUD TO TOP / SILL PLATE. SEE DETAIL (A/D-2.1) FOR ALL OTHER REQUIREMENTS.

ROOF FRAMING NOTES:

1. USE H-1 CLIPS AT EACH TRUSS TOP PLATE / BEAM CONNECTIONS.
2. WHERE H-1 CLIP DOES NOT FIT FOR STANDARD SINGLE PLY TRUSS PROVIDE H2.5A AT TRUSS TO TOP PLATE W/ A35 AT NEXT ADJACENT EAVE BLOCK TO TOP PLATE CONNECTION.
   ALTERNATE CONNECTION: PROVIDE HGA10 AT TRUSS TO TOP PLATE.
3. PROVIDE EAVE BLOCKS BETWEEN EACH TRUSS W/ 8d AT 6" O.C. AND PROVIDE VENT BLOCKS AT EVERY THIRD TRUSS IF APPLIES.
4. PROVIDE 5/8" APA RATED EXPOSURE-1 OSB RADIANT BARRIER ROOF SHEATHING (SPAN INDEX 40/20) WITH 8d @ 6" - 6" - 12". CASE 1 LAYOUT.
5. USE ⅝" "LP FLAMEBLOCK" SHEATHING AT EAVES W/ 6-6-12 NAILING AND CASE 1 LAYOUT. USE EXTERIOR GLUE AT ALL EXPOSED EAVES.
6. ROOF UNDER LAYMENT SHALL COMPLY WITH CBC 1507 AND APPLICABLE TABLES. USE 30# FELT UNDERNEATH ALL ROOF MATERIALS.
7. FASCIA TO BE 2X8 HEM FIR.
8. PROVIDE FLASHING AND COUNTER FLASHING AT ROOF TO WALL CONNECTIONS.
9. PROVIDE DIAGONAL BRACING AT GABLE ENDS AS PER TRUSS MANUFACTURER SPECIFICATIONS.
10. ALL GABLE END TRUSSES SHALL HAVE RADIANT BARRIER APPLIED TO BACK OF TRUSS.

FRAMING NOTES:

1. **WINDOW / DOOR OPENING NOTE:** ALL WINDOW / DOOR OPENINGS SHALL BE CONNECTED PER DETAIL (A/D-2.1) U.O.N.
2. ALL TOP PLATES TO HAVE 48" MIN. LAP AT SPLICES WITH **(12)-16d NAILS** STAGGERED PER LAP CONNECTION. NAILS SHALL BE INSTALLED VERTICALLY (PERPENDICULAR TO TOP PLATE). (**DO NOT INSTALL NAILS AT ANGLE**)
3. ALL LUMBER SHALL BE IDENTIFIED WITH THE GRADE MARK AND STAMP OF THE GRADING ASSOCIATION COVERING THE SPECIES AND UNDER WHOSE GRADING RULES THE LUMBER WAS PRODUCED.
4. THE MANUFACTURERS A.I.T.C. CERTIFICATION OF COMPLIANCE FOR GLU-LAM BEAMS OR MICRO-LAM BEAMS IS TO BE PROVIDED AT THE TIME OF FRAMING INSPECTION AND PROPERLY INDICATE THE FIBER BENDING AND GRADE SPECIFICATION.
5. PLACE SHEAR PANEL ON SHEAR WALLS PRIOR TO THE CONSTRUCTION OF INTERSECTING WALLS.
6. PROVIDE FIRE STOPS IN CONCEALED SPACES OF STUD WALLS INCLUDING SPACES AT CEILING AND FLOORS & IN OPENINGS AROUND DUCTS, PIPES, CHIMNEYS, AND SIMILAR OPENINGS WHICH ALLOW PASSAGE OF FIRE.
7. ALL COIL STRAPS ARE TO BE EVENLY DISTRIBUTED ONTO BOTH MEMBERS BEING CONNECTED. (U.O.N.)
8. ALL COIL STRAPS ARE TO BE **FULLY NAILED** UNLESS OTHERWISE NOTED ON SPECIFIED DETAIL.

ROOF FRAMING PLAN LEGEND

——— =	GARAGE EXTERIOR WALLS: (PLATE HEIGHT = 10'-0")	2X6 D.F. #2 STUDS @ 16" O/C
····· =	RV GARAGE EXTERIOR WALLS: (PLATE HEIGHT = 15'-0")	2X6 D.F. #2 STUDS @ 16" O/C

SPECIAL INSPECTION REQUIRED

THE CONTRACTOR SHALL NOTE THAT SPECIAL INSPECTION IS REQUIRED FOR THIS PROJECT. FOR THE SPECIAL INSPECTIONS REQUIRED ON THIS PROJECT SEE THE SPECIAL INSPECTION NOTES ON SHEET S-1.1.

AXIAL LOADED TRUSSES

????#

ALL AXIAL LOADED TRUSSES TO BE IN LINE WITH SHEAR PANELS AS SHOWN ON FRAMING PLAN AND ROOF PLY TO BE NAILED WITH 8d NAILS @ 6 O.C. ALONG ENTIRE LENGTH OF TRUSS.
AT ALL AXIAL LOADED G.T.'S OR (2) PLY AXIAL LOADED TRUSSES **PROVIDE 8d @ 6" O/C FROM ROOF SHEATHING INTO BOTH TOP CHORD MEMBERS OF TRUSS**. STAGGER NAILS ON BOTH TOP CHORD MEMBERS AND NAIL FOR ENTIRE LENGTH OF TRUSS. (THEREFORE THERE SHOULD BE TWO ROWS OF 8d @ 6" O/C ALONG MULTI PLY TRUSS)

ENGINEERING
239-4151
John A. Kudla
Civil Engineering &
Structural Design
R.C.E. #50652
610 10th ST. UNIT 'A' PASO
ROBLES, CA.

PLAN PREPARED FOR:

MICHAEL VELA
TR 1990-2, LOT 147
PASO ROBLES, CA 93446

REVISION LOG

REV.	DESCRIPTION	DATE

These drawings are the exclusive property of J.K. Engineering and shall be used solely for the purpose of this project on this site. Any use other than the project upon which it is intended for without the written consent of J.K. Engineering and John Kudla is prohibited.

PROJECT NO. ---

FILE NAME S-2.3 GARAGE FRAMING PLAN.DWG

DRAWN BY NFS

DATE 5/1/2019 11:34 AM

SHEET TITLE:

GARAGE FRAMING PLAN

SHEET NUMBER:

S-2.3

[Drafting/PROJECT DWG/Michael/Kudla/Bldg/elevations/S-2.1 GARAGE FRAMING PLAN.dwg, Nick Sweeney, 5/7/2019 10:18:53 AM

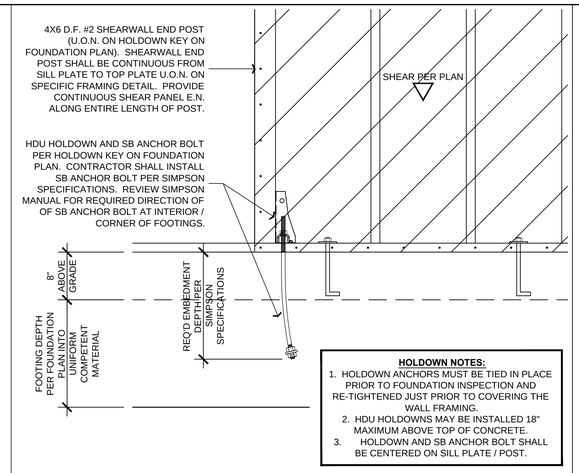

7 HDU HOLDOWN & SB ANCHOR BOLT DETAIL

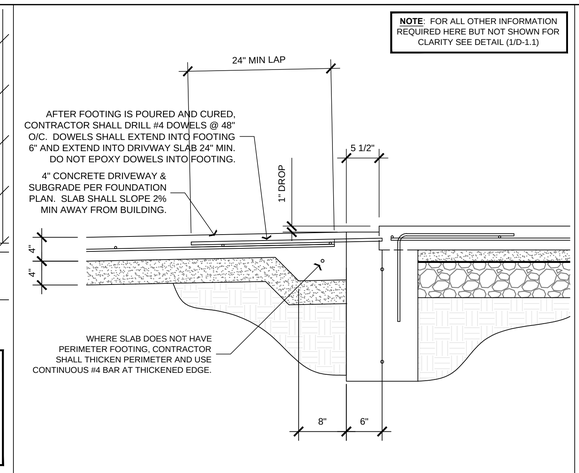

4 FOOTING AT GARAGE DOOR

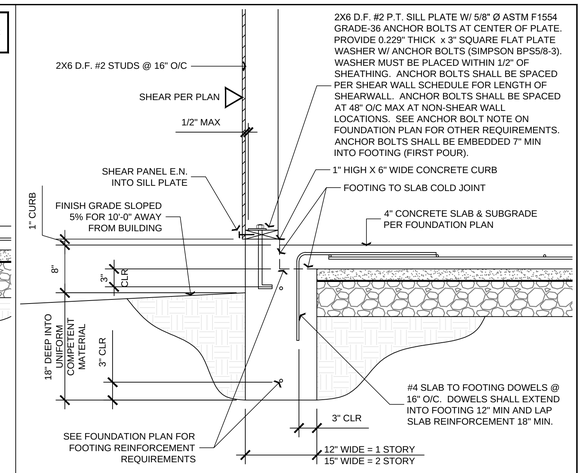

1 EXTERIOR FOOTING AT GARAGE

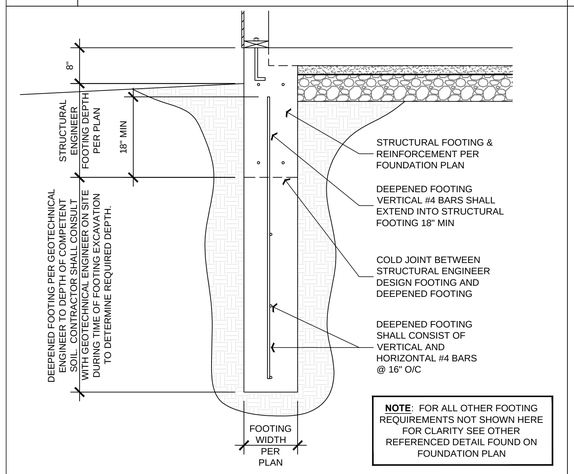

8 DEEPENDED FOOTING - IF GEO. ENG. REQ'S

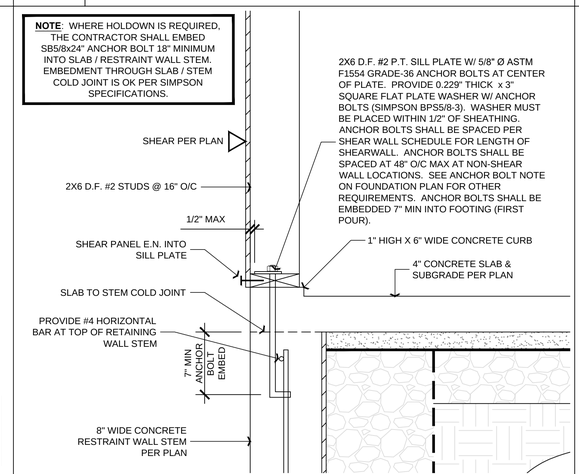

5 STUD WALL AT CONCRETE RESTRAINT WALL

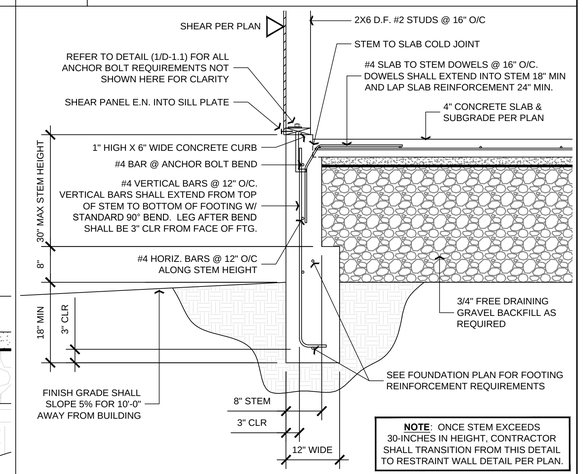

2 RAISED EXTERIOR FOOTING

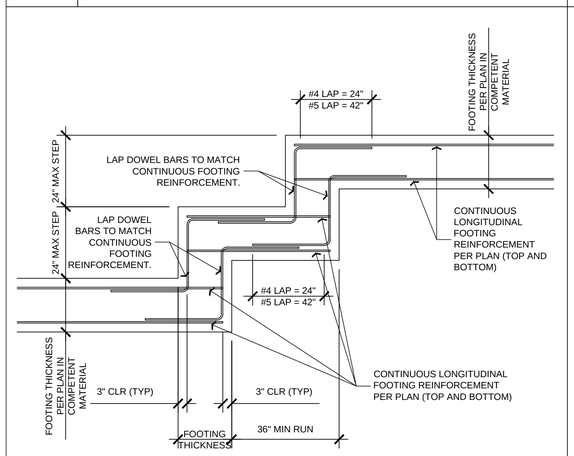

9 STEPPED FOOTING DETAIL

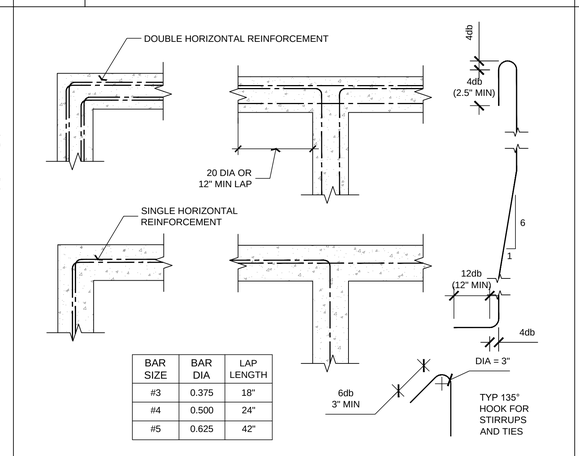

BAR SIZE	BAR DIA	LAP LENGTH
#3	0.375	18"
#4	0.500	24"
#5	0.625	42"

6 TYPICAL HORIZONTAL REINFORCING

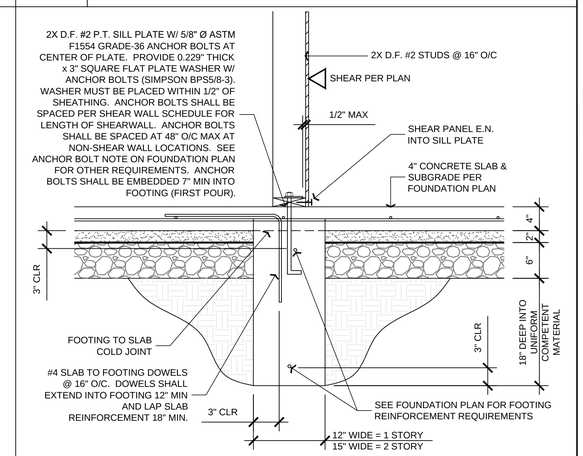

3 INTERIOR FOOTING DETAIL

ENGINEERING
239-4151
John A. Kudla
Civil Engineering &
Structural Design
R.C.E. #50652
610 10th ST. UNIT 'A' PASO
ROBLES, CA.

PLAN PREPARED FOR:

ERRON VELA
LOT 147 OF TRACT 1990 - TIMBERLINE DRIVE
PASO ROBLES, CA 93446

REVISION LOG

REV.	DESCRIPTION	DATE

These drawings are the exclusive property of J.K. Engineering and shall be used solely for the purpose of this project on this site. Any use other than the project upon which it is intended for without the written consent of J.K. Engineering and John Kudla is prohibited.

PROJECT NO. 18-0921-17
FILE NAME DJK
DRAWN BY 09/21/18
DATE FOUNDATION DETAILS.DWG
SHEET TITLE:

GARAGE STRUCTURAL DETAILS

SHEET NUMBER:

D-1.1

\\drafting\PROJECTS\Vela\Consultants\Kudla Engineering\Vela_Erron (Single Family Residence)\Garage\FOUNDATION DETAILS.dwg Nick Sowerby 9/20/2018 11:33:46 AM

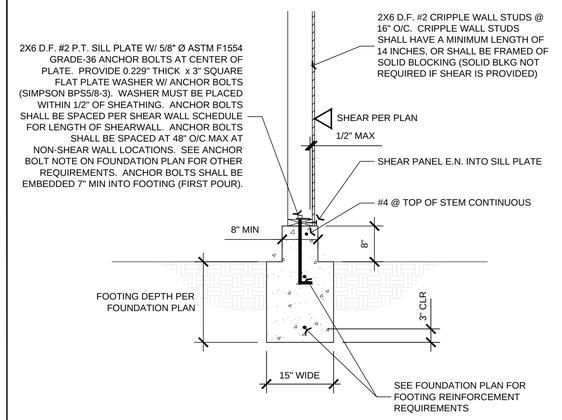

9 INTERIOR FOOTING

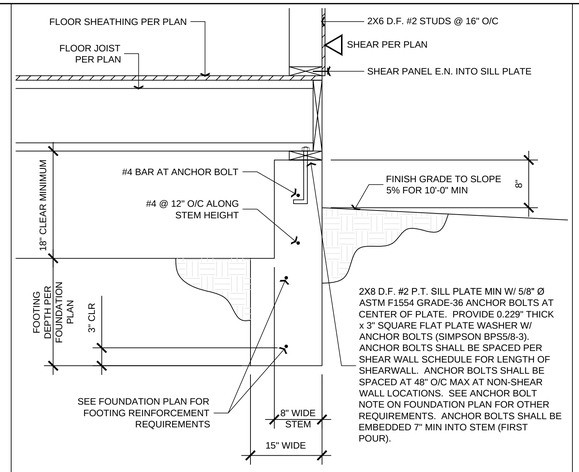

7 RAISED FOUNDATION - NO CRIPPLE WALL

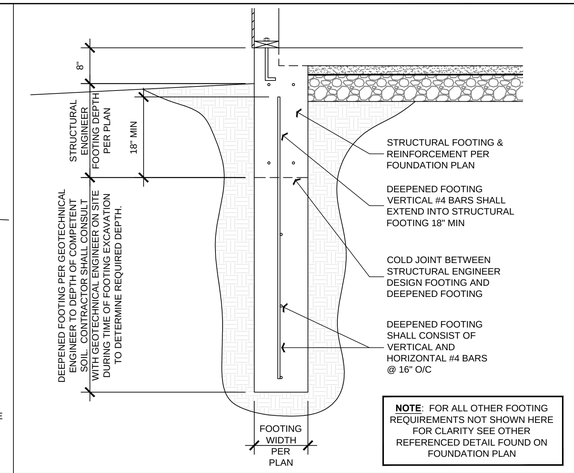

4 DEEPENDED FOOTING - IF GEO. ENG. REQ'S

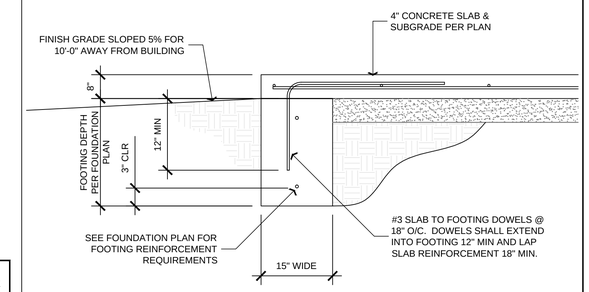

1 PERIMETER FOOTING

NOTE: FOR STRUCTURES TO BE CONSTRUCTED ABOVE SLOPES, THE OUTSIDE FACES AT THE BOTTOM OF FOOTINGS SHOULD PROVIDE A MINIMUM HORIZONTAL DISTANCE OF 20-FEET FROM THE SLOPE FACE. CONTRACTOR SHALL DEEPEN FOOTING AS REQUIRED.
NOTE: GRADE BEAM REINFORCEMENT SHALL BE CONTINUOUS THROUGH PAD FOOTING. (DO NOT PROVIDE LAP SPLICE AT PAD FOOTING)

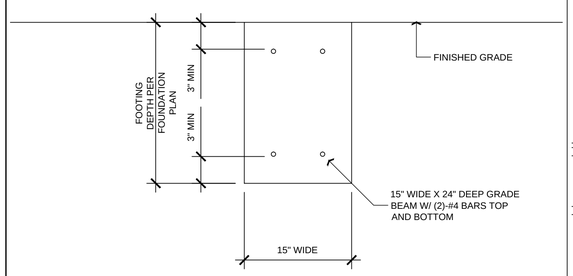

10 CONTINUOUS GRADE BEAM DETAIL

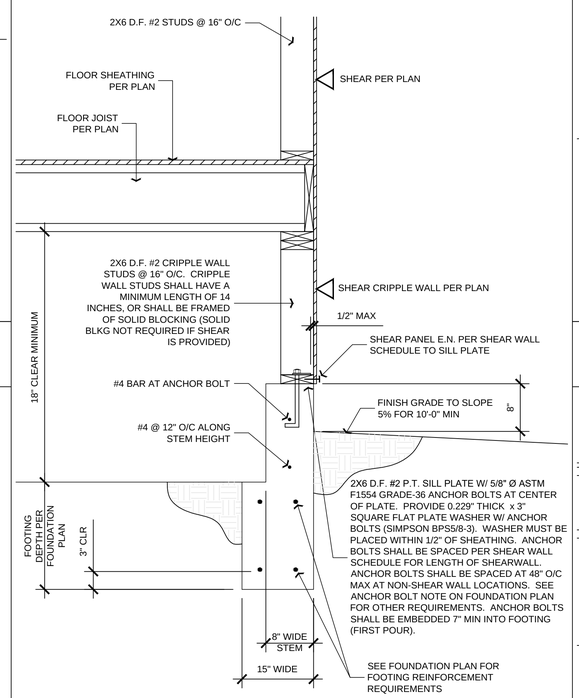

8 RAISED FOUNDATION W/ CRIPPLE WALL

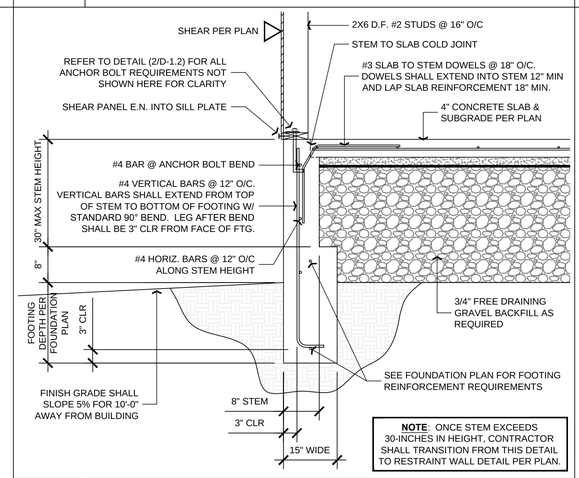

5 RAISED EXTERIOR FOOTING

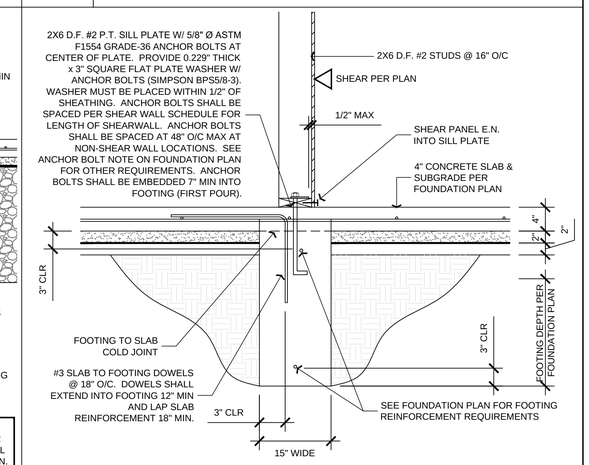

2 INTERIOR FOOTING DETAIL

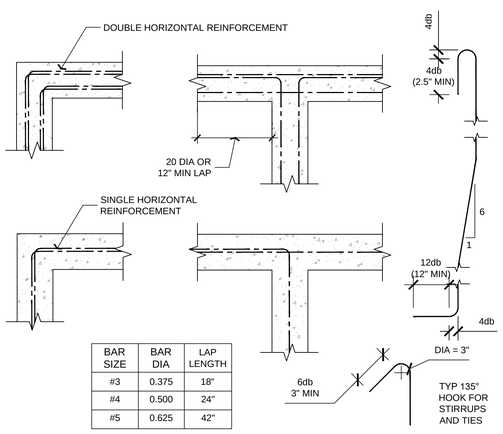

BAR SIZE	BAR DIA	LAP LENGTH
#3	0.375	18"
#4	0.500	24"
#5	0.625	42"

11 TYPICAL HORIZONTAL REINFORCING

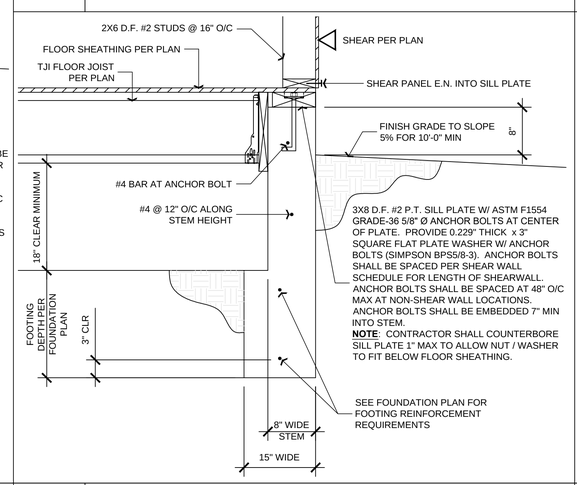

6 RAISED FOUNDATION W/ LEDGER

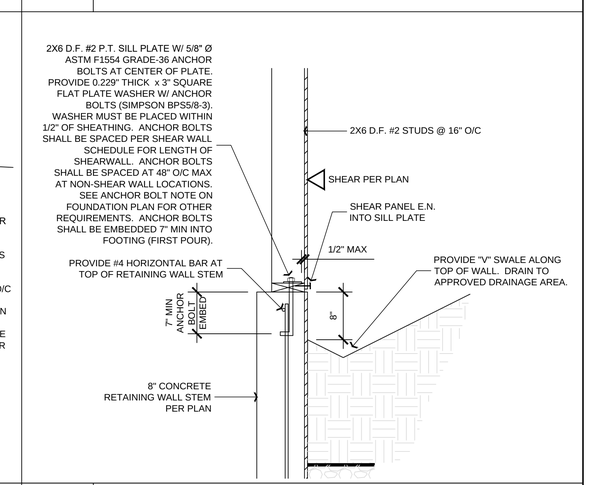

3 STUD WALL AT CONCRETE RETAINING WALL

ENGINEERING
239-4151
John A. Kudla
Civil Engineering &
Structural Design
R.C.E. #50652
610 10th ST. UNIT 'A' PASO ROBLES, CA.

PLAN PREPARED FOR:

ERRON VELA
LOT 147 OF TRACT 1990 - TIMBERLINE DRIVE
PASO ROBLES, CA 93446

REVISION LOG

REV.	DESCRIPTION	DATE

These drawings are the exclusive property of J.K. Engineering and shall be used solely for the purpose of this project on this site. Any use other than the project upon which it is intended for without the written consent of J.K. Engineering and John Kudla is prohibited.

PROJECT NO. 18-0921-17
FILE NAME DJK
DRAWN BY 09/21/18
DATE FOUNDATION DETAILS.DWG
SHEET TITLE:

STRUCTURAL DETAILS

SHEET NUMBER:

D-1.2

\\Drawing\PROJECTS\Vela\Construction\Kudla Engineering\Vela_Erron (Single Family Residence)\Plans\FOUNDATION DETAILS.dwg Nick Sowersby 10/12/2018 8:21:13 AM

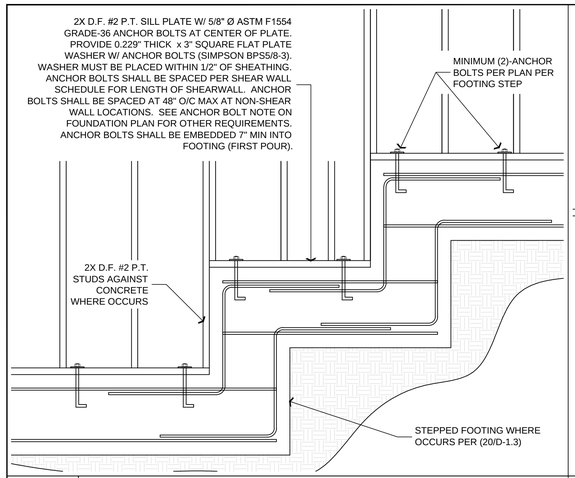

21 STUD WALL TO STEPPED FOOTING

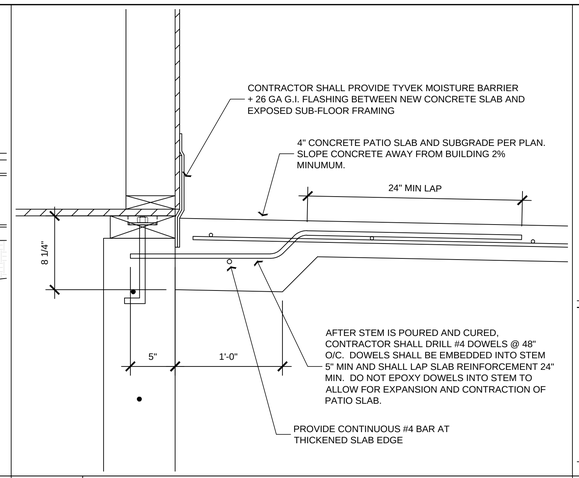

18 PATIO SLAB TO STEM CONNECTION

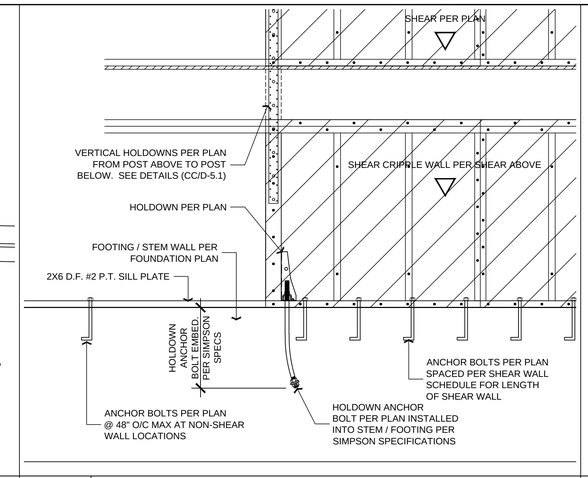

15 HOLDOWN DETAIL W/ CRIPPLE WALL

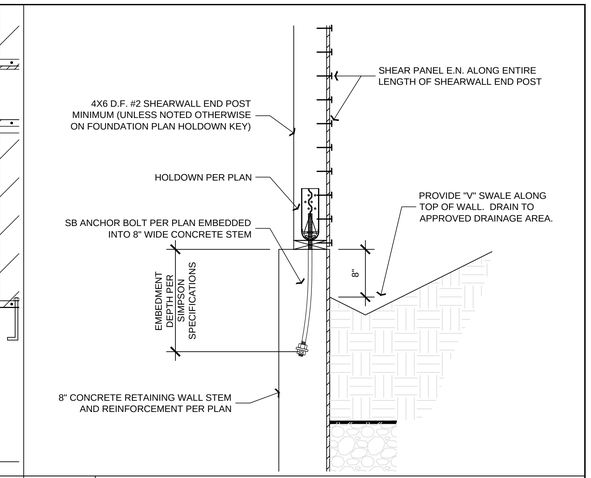

12 SB ANCHOR BOLT AT CONCRETE STEM

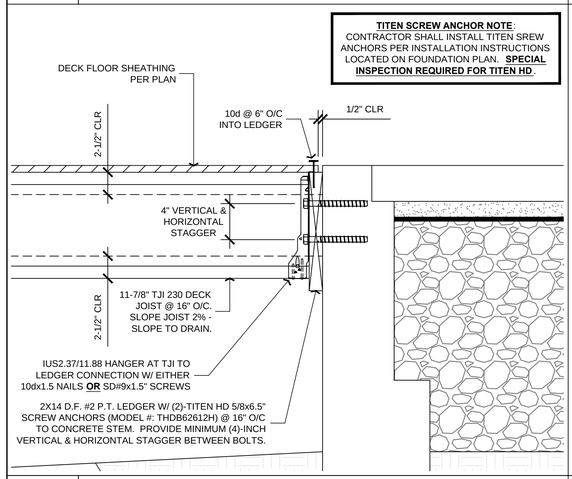

22 LEDGER CONNECTION TO CONCRETE STEM

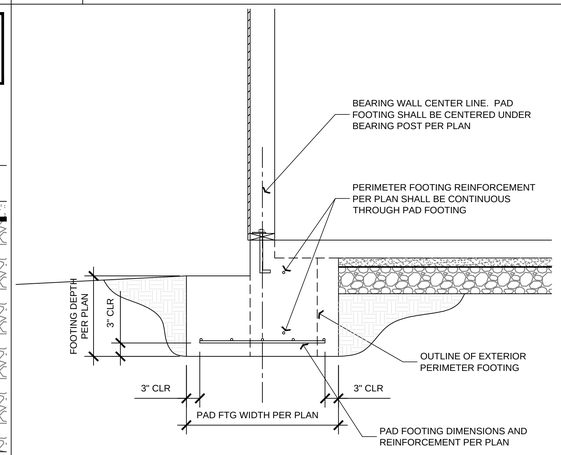

19 PAD FOOTING AT PERIMETER FOOTING

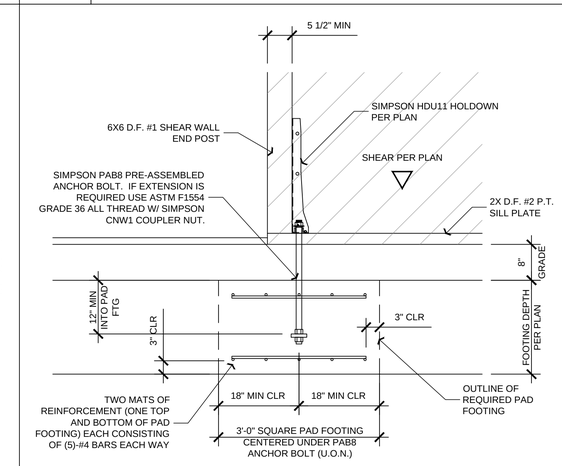

16 HDU11 HOLDOWN DETAIL

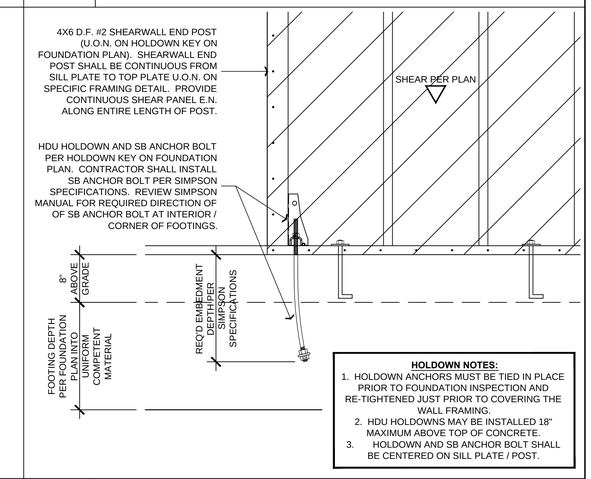

13 HDU HOLDOWN & SB ANCHOR BOLT DETAIL

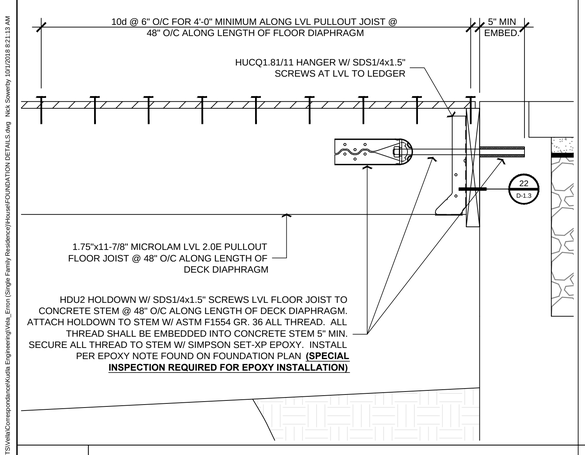

23 DECK PULLOUT CONNECTION TO CONCRETE

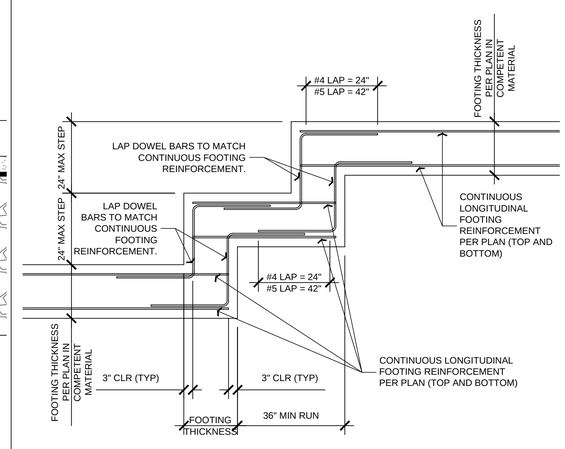

20 STEPPED FOOTING DETAIL

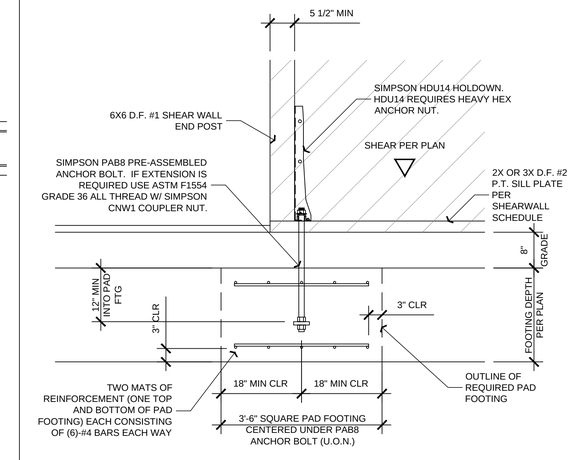

17 HDU14 HOLDOWN DETAIL

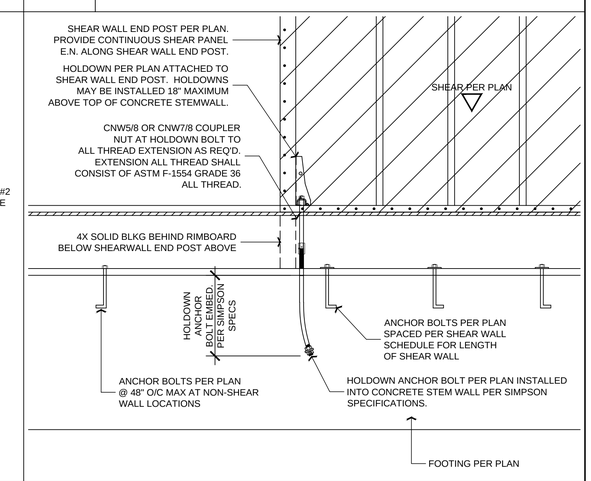

14 HDU HOLDOWN & SB ANCHOR BOLT DETAIL

ENGINEERING
239-4151
John A. Kudla
Civil Engineering &
Structural Design
R.C.E. #50652
610 10th ST. UNIT 'A' PASO
ROBLES, CA.

PLAN PREPARED FOR:

ERRON VELA
LOT 147 OF TRACT 1990 - TIMBERLINE DRIVE
PASO ROBLES, CA 93446

REVISION LOG

REV.	DESCRIPTION	DATE

These drawings are the exclusive property of J.K. Engineering and shall be used solely for the purpose of this project on this site. Any use other than the project upon which it is intended for without the written consent of J.K. Engineering and John Kudla is prohibited.

PROJECT NO. 18-0921-17
FILE NAME DJK
DRAWN BY 09/21/18
DATE FOUNDATION DETAILS.DWG
SHEET TITLE:

STRUCTURAL DETAILS

SHEET NUMBER:

D-1.3

\\Bdrive\Projects\Wd\Correspondence\Kudla Engineering\Vela_Erron\Single Family Residence\Plan\Foundation DETAILS.dwg Wed, Sep/26, 2018 8:21:13 AM

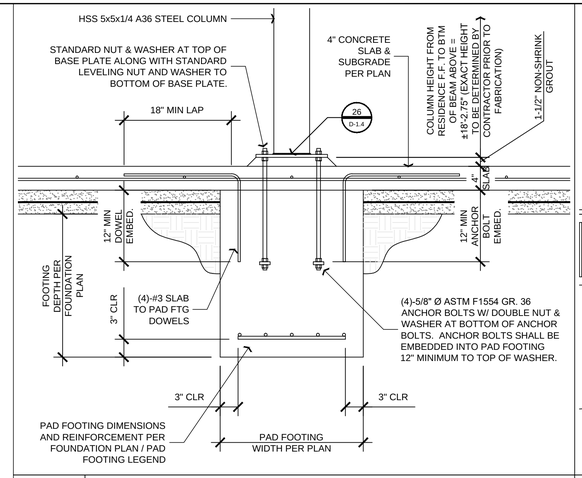

27 STEEL COLUMN TO PAD FOOTING DETAIL

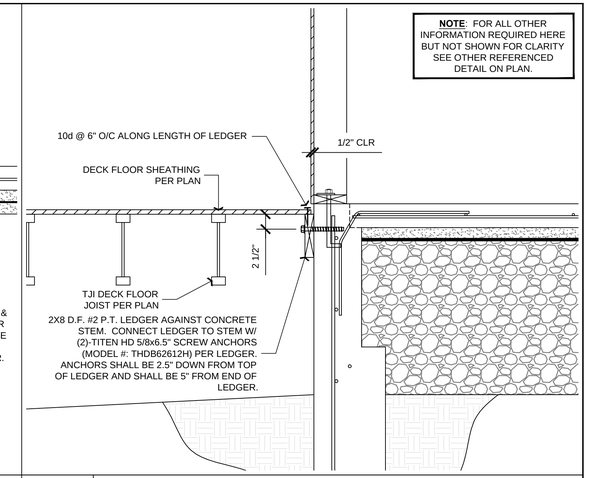

24 LEDGER CONNECTION

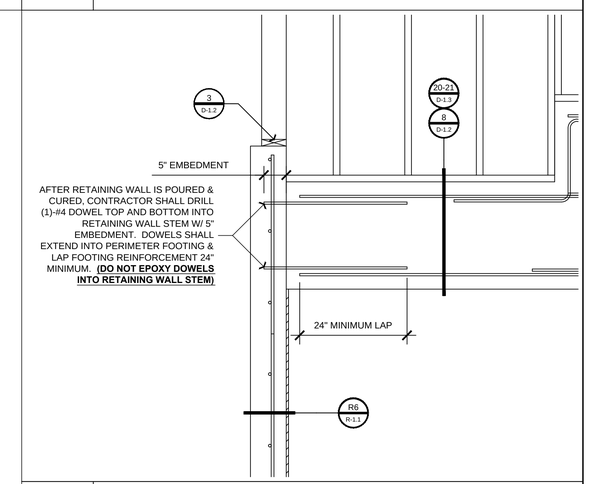

25 FOOTING TO RETAINING WALL TIE

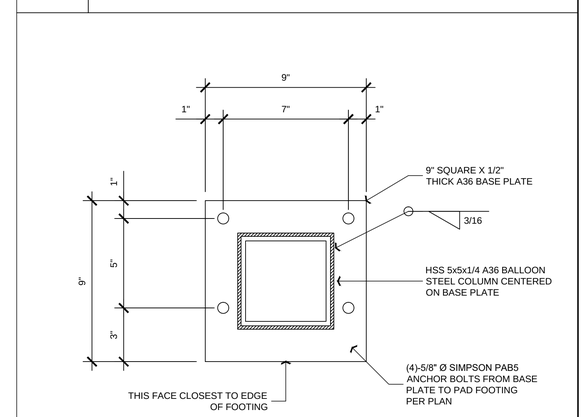

26 STEEL COLUMN BASE PLATE DETAIL

ENGINEERING
239-4151
John A. Kudla
Civil Engineering &
Structural Design
R.C.E. #50652
610 10th ST. UNIT 'A' PASO ROBLES, CA.

PLAN PREPARED FOR:

ERRON VELA
LOT 147 OF TRACT 1990 - TIMBERLINE DRIVE
PASO ROBLES, CA 93446

REVISION LOG

REV.	DESCRIPTION	DATE

These drawings are the exclusive property of J.K. Engineering and shall be used solely for the purpose of this project on this site. Any use other than the project upon which it is intended for without the written consent of J.K. Engineering and John Kudla is prohibited.

PROJECT NO. 18-0921-17
FILE NAME DJK
DRAWN BY 09/21/18
DATE FOUNDATION DETAILS.DWG

SHEET TITLE:
STRUCTURAL DETAILS

SHEET NUMBER:
D-1.4

\\Storefing\PROJECTS\Vela\Correspondence\Kudla Engineering\Vela_Erron (Single Family Residence)\House\FOUNDATION DETAILS.dwg Nick Sowerby 10/10/2018 8:21:13 AM

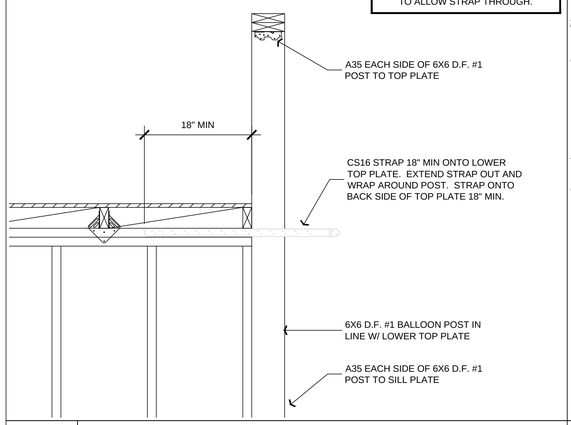

J RE-ENTRANT CORNER CONNECTION

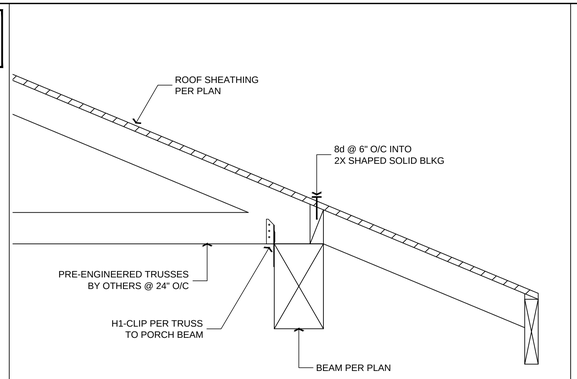

G SHEAR TRANSFER - TRUSS EAVE TO BEAM

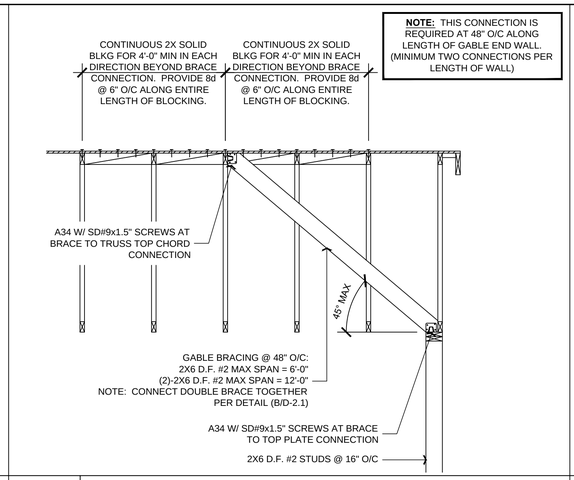

D OUT-OF-PLANE CONNECTION AT GABLE END

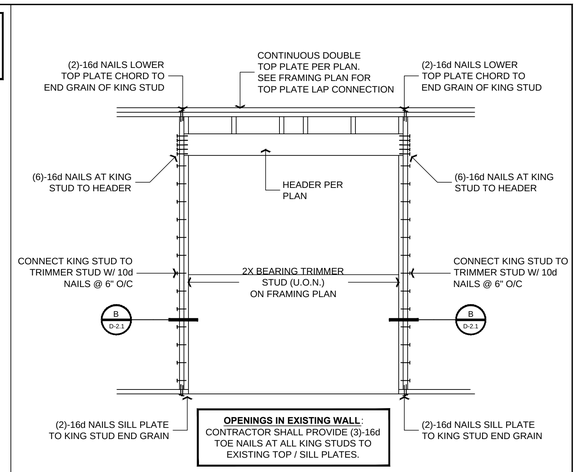

A TYP FRM AT WINDOW / DOOR OPENING (U.O.N.)

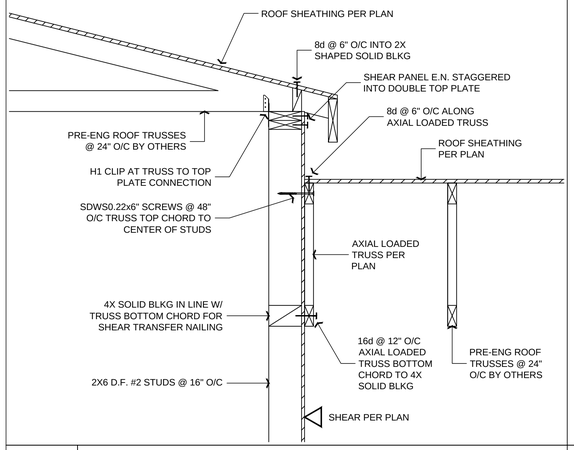

K SHEAR TRANSFER

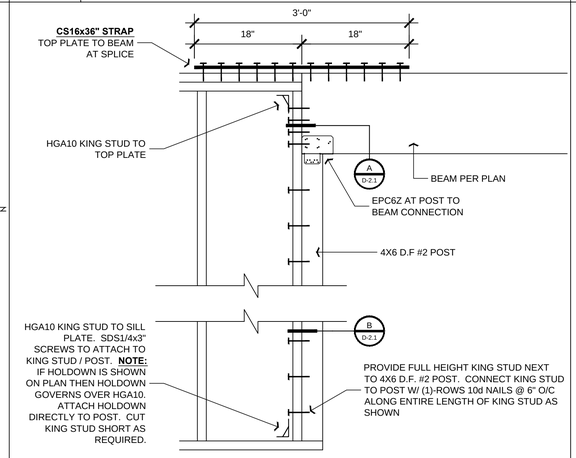

H TYP GARAGE HEADER CONNECTION

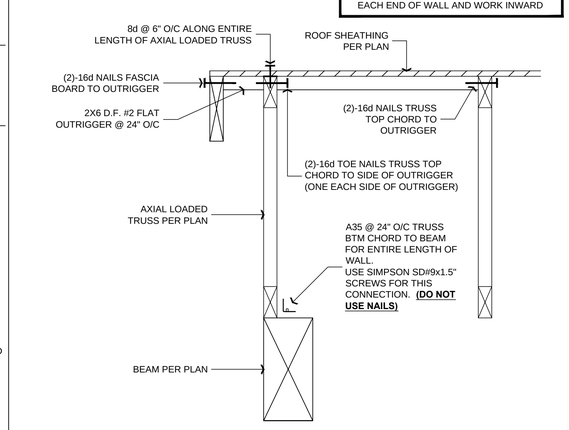

E SHEAR TRANSFER - GABLE END TRUSS

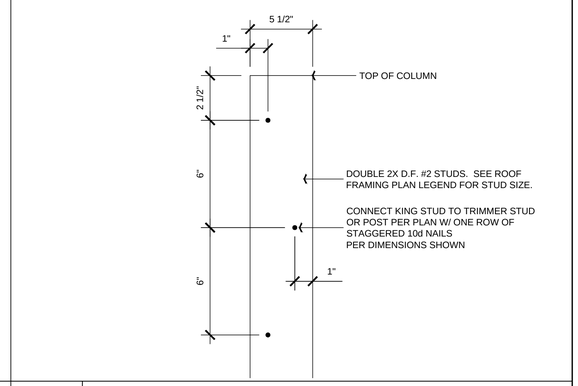

B BUILT UP DOUBLE STUD COLUMN

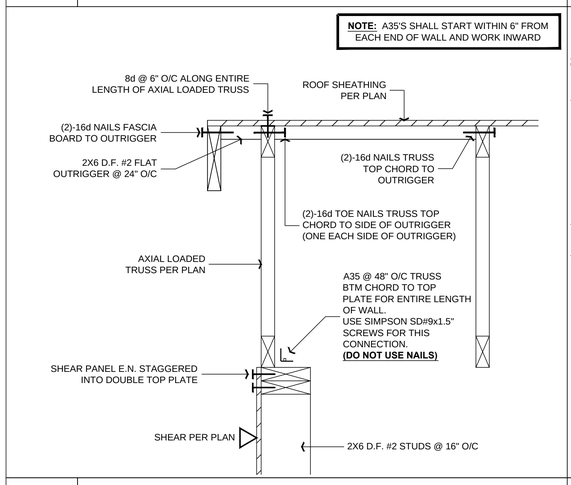

L SHEAR TRANSFER - GABLE END TRUSS

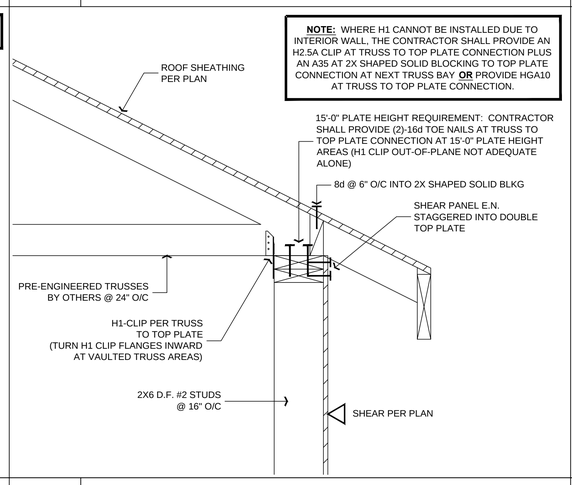

I SHEAR TRANSFER - TRUSS EAVE CONNECTION

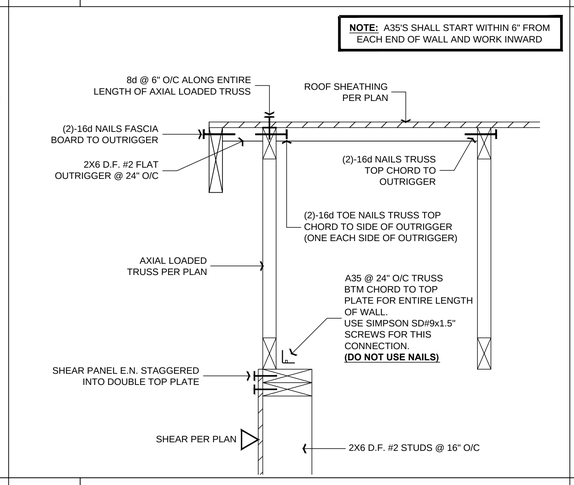

F SHEAR TRANSFER - GABLE END TRUSS

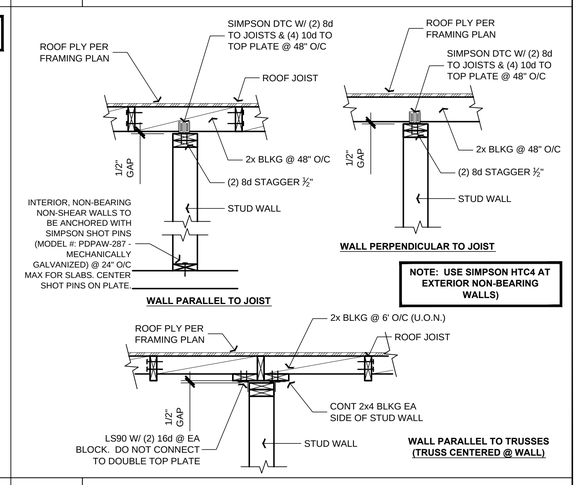

C INTERIOR NON-BRG WALL DETAIL

ENGINEERING
239-4151
John A. Kudla
Civil Engineering &
Structural Design
R.C.E. #50652
610 10th ST. UNIT 'A' PASO
ROBLES, CA.

PLAN PREPARED FOR:

ERRON VELA
LOT 147 OF TRACT 1990 - TIMBERLINE DRIVE
PASO ROBLES, CA 93446

REVISION LOG

REV.	DESCRIPTION	DATE

These drawings are the exclusive property of J.K. Engineering and shall be used solely for the purpose of this project on this site. Any use other than the project upon which it is intended for without the written consent of J.K. Engineering and John Kudla is prohibited.

PROJECT NO. 18-0921-17
DRAWN BY DJK
DATE: 09/21/18
SHEET TITLE: VELA GARAGE STRUCTURAL.DWG

GARAGE STRUCTURAL DETAILS

SHEET NUMBER:
D-2.1

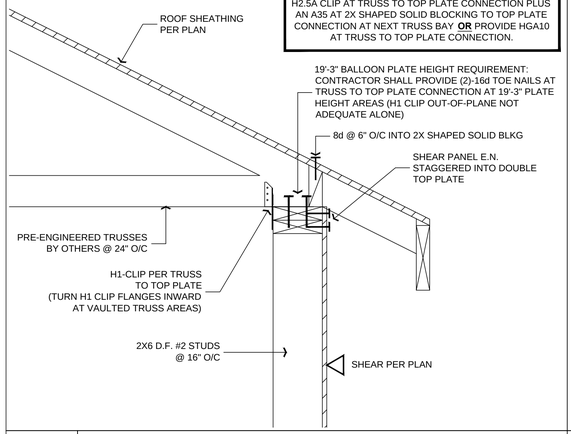

J SHEAR TRANSFER - TRUSS EAVE CONNECTION

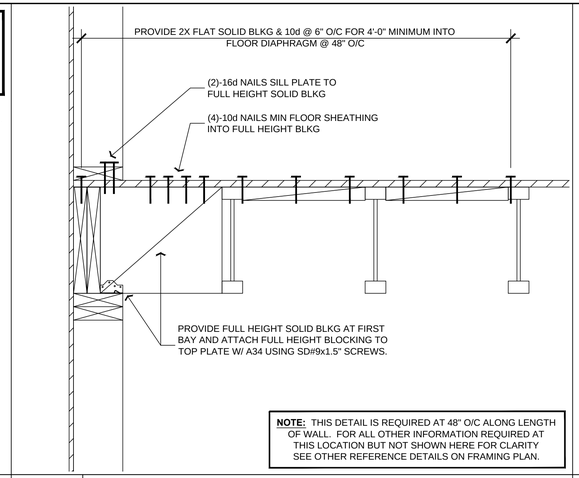

G OUT OF PLANE FORCE TRANSFER @ 48" O/C

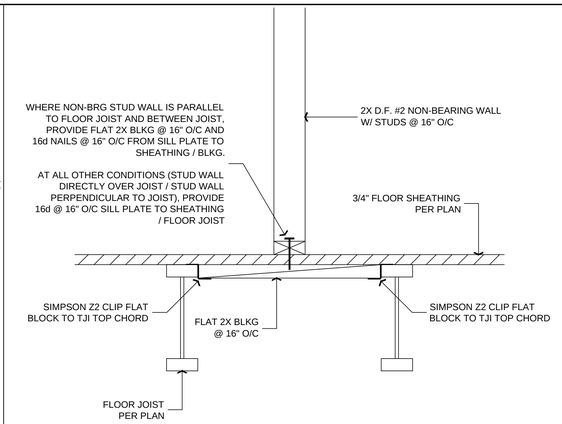

D NON-BEARING WALL AT FLOOR SYSTEM

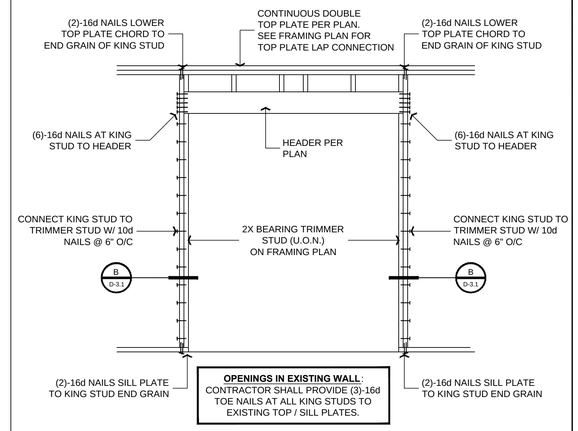

A TYP FRM AT WINDOW / DOOR OPENING (U.O.N.)

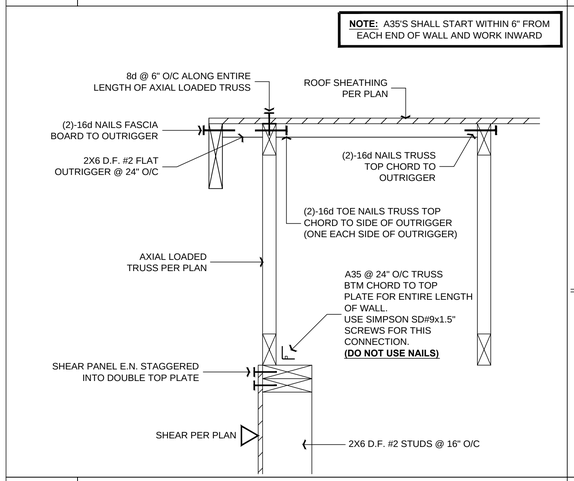

K SHEAR TRANSFER - GABLE END TRUSS

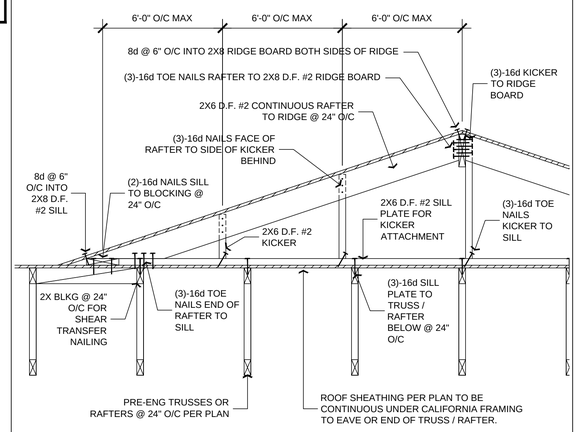

H CALIFORNIA FRAMING

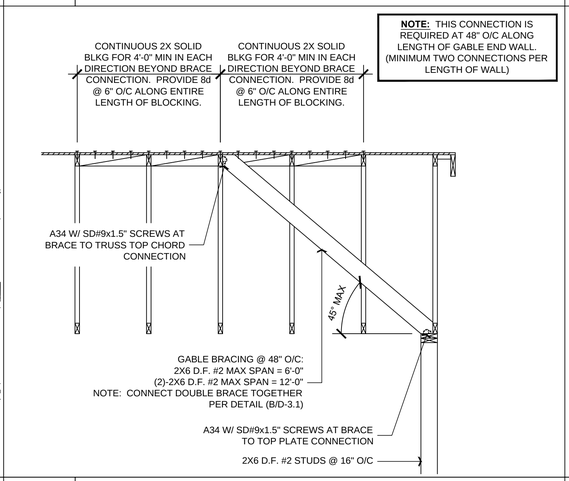

E OUT-OF-PLANE CONNECTION AT GABLE END

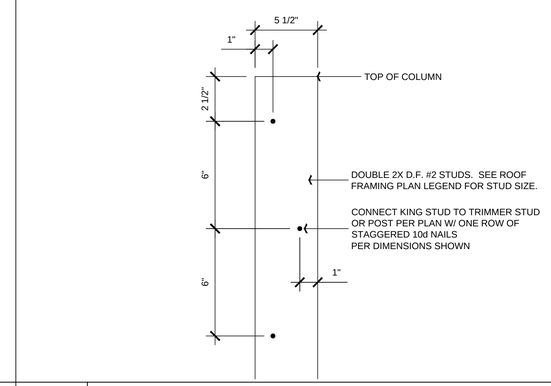

B BUILT UP DOUBLE STUD COLUMN

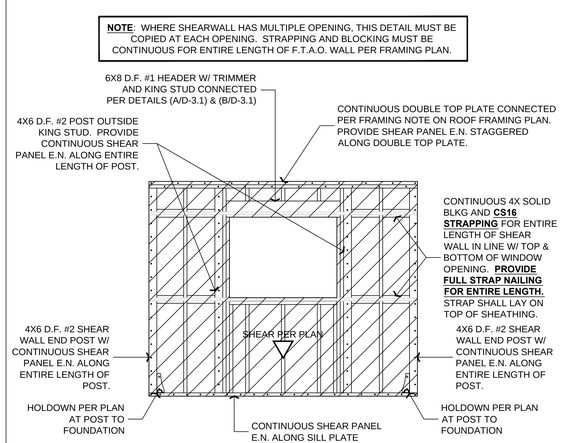

L FORCE TRANSFER AROUND OPENING (F.T.A.O.)

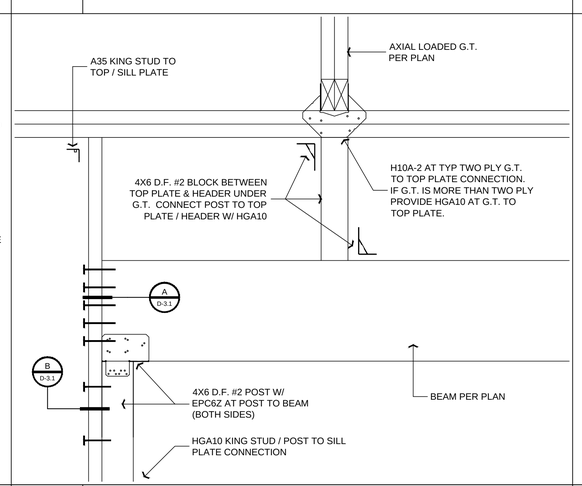

I TYP G.T. OVER HEADER CONNECTION

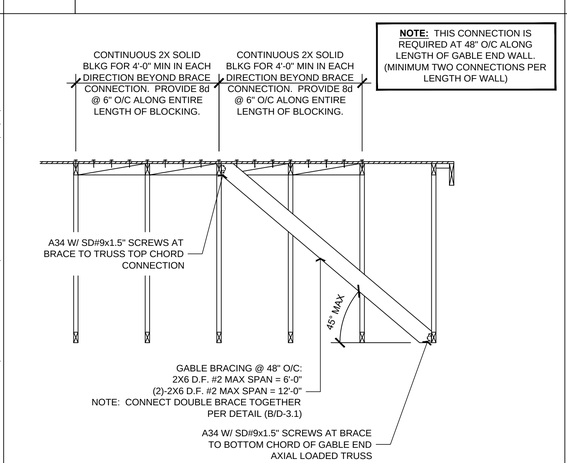

F OUT-OF-PLANE CONNECTION AT GABLE END

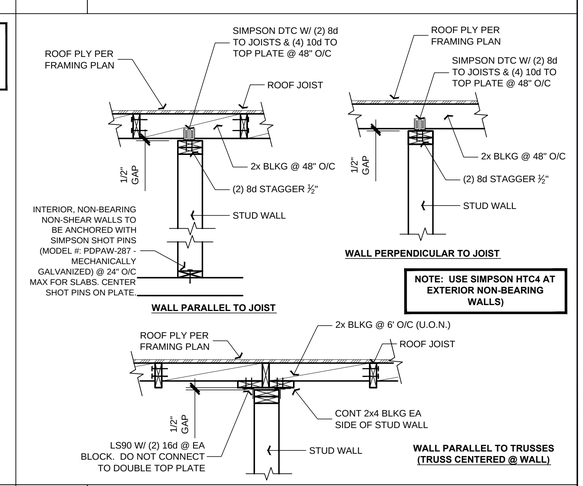

C INTERIOR NON-BRG WALL DETAIL

ENGINEERING
239-4151
John A. Kudla
Civil Engineering &
Structural Design
R.C.E. #50652
610 10th ST. UNIT 'A' PASO ROBLES, CA.

PLAN PREPARED FOR:

ERRON VELA
LOT 147 OF TRACT 1990 - TIMBERLINE DRIVE
PASO ROBLES, CA 93446

REVISION LOG

REV.	DESCRIPTION	DATE

These drawings are the exclusive property of J.K. Engineering and shall be used solely for the purpose of this project on this site. Any use other than the project upon which it is intended for without the written consent of J.K. Engineering and John Kudla is prohibited.

PROJECT NO. 18-0921-17
DRAWN BY DJK
DATE: 09/21/18
SHEET TITLE: VELA HOUSE STRUCTURAL.DWG

STRUCTURAL DETAILS

SHEET NUMBER:
D-3.1

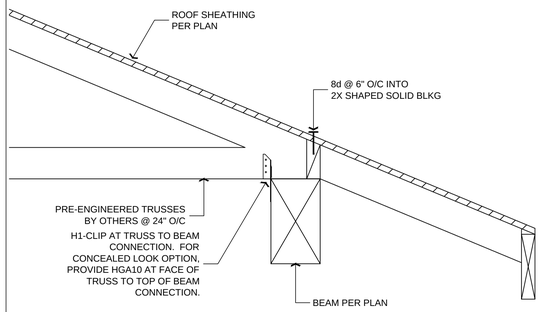

V SHEAR TRANSFER - TRUSS EAVE TO BEAM

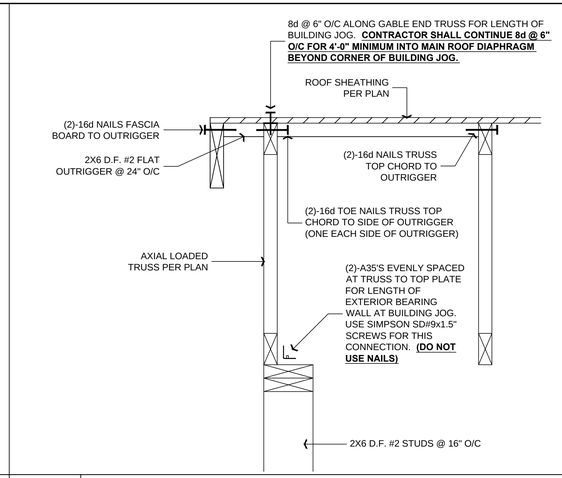

S SHEAR TRANSFER / DRAG CONNECTION

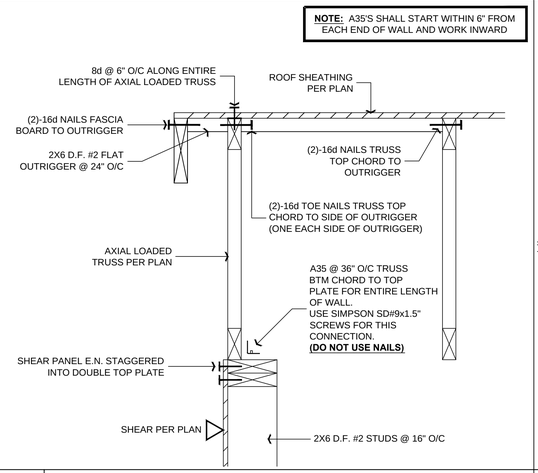

P SHEAR TRANSFER - GABLE END TRUSS

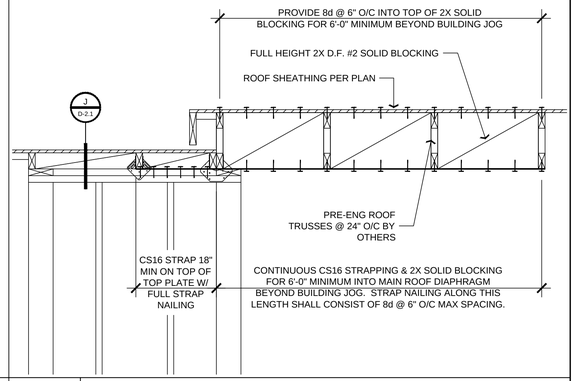

M DRAG / CHORD FORCE CONNECTION

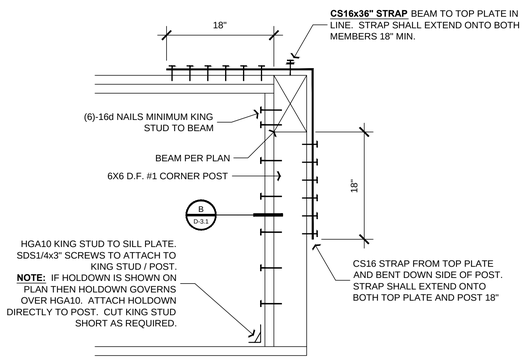

W BEAM POCKET CONNECTION

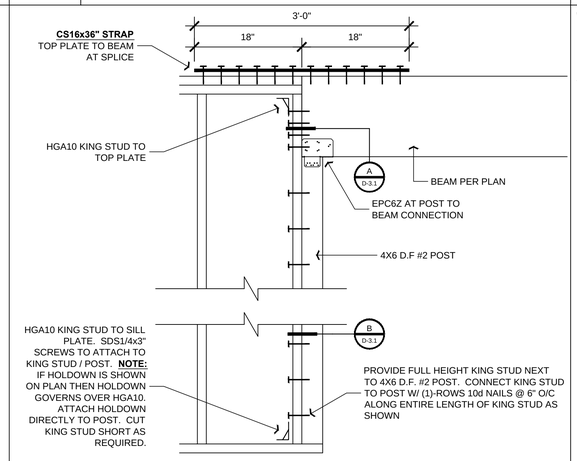

T BEAM TO TOP PLATE SPLICE CONNECTION

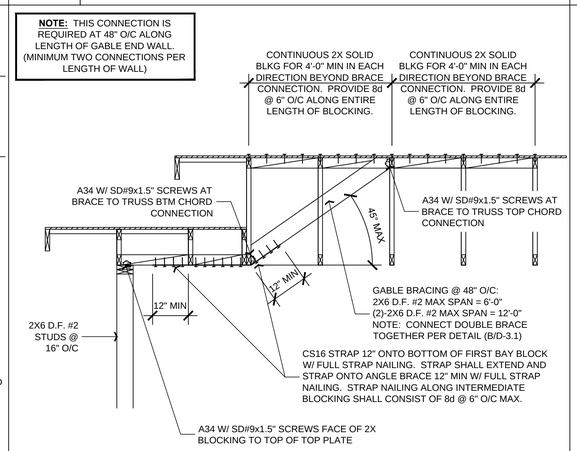

Q OUT-OF-PLANE CONNECTION AT GABLE END

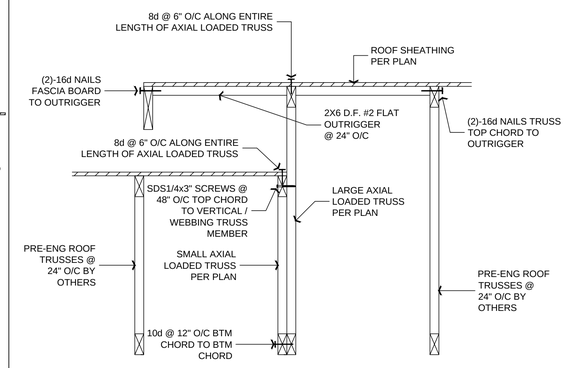

N SHEAR TRANSFER - ROOF TRANSITION

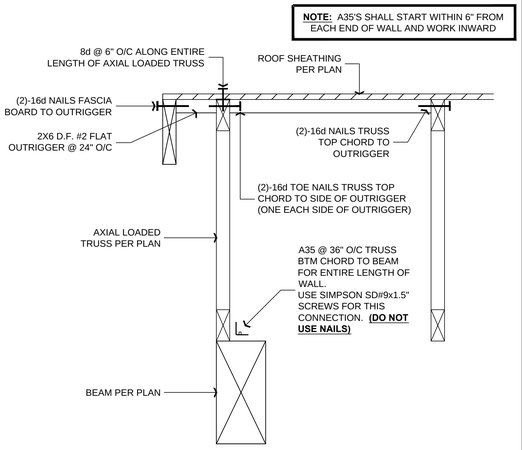

X SHEAR TRANSFER - GABLE END TRUSS

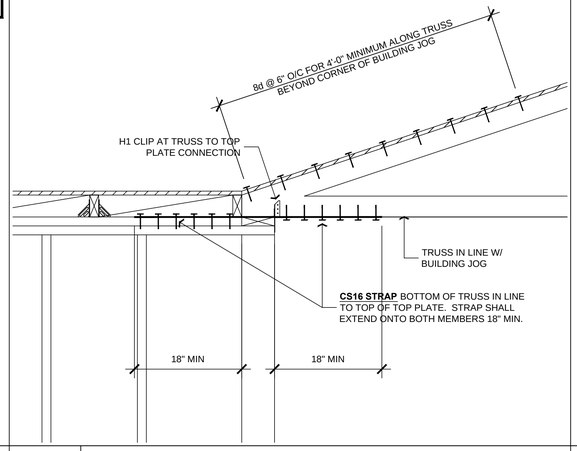

U DRAG CONNECTION

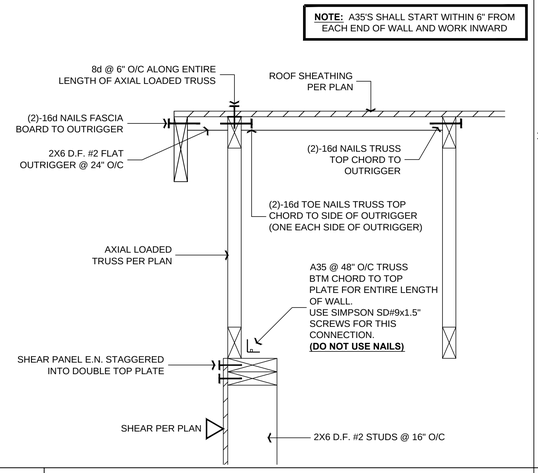

R SHEAR TRANSFER - GABLE END TRUSS

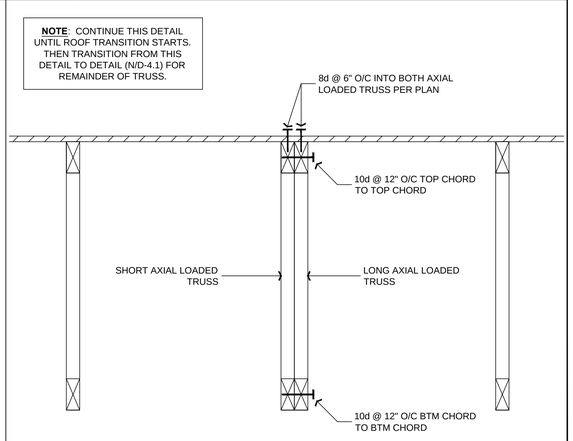

O SHEAR TRANSFER - TRUSS TO TRUSS

ENGINEERING
239-4151
John A. Kudla
Civil Engineering & Structural Design
R.C.E. #50652
610 10th ST. UNIT "A" PASO ROBLES, CA.

PLAN PREPARED FOR:

ERRON VELA
LOT 147 OF TRACT 1990 - TIMBERLINE DRIVE
PASO ROBLES, CA 93446

REVISION LOG

REV.	DESCRIPTION	DATE

These drawings are the exclusive property of J.K. Engineering and shall be used solely for the purpose of this project on this site. Any use other than the project upon which it is intended for without the written consent of J.K. Engineering and John Kudla is prohibited.

PROJECT NO. 18-0921-17
DRAWN BY DJK
DATE: 09/21/18
SHEET TITLE: VELA HOUSE STRUCTURAL.DWG

STRUCTURAL DETAILS

SHEET NUMBER:

D-4.1

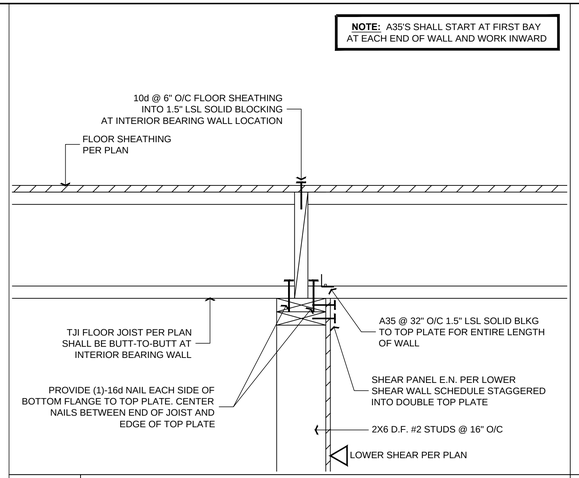

H H SHEAR TRANSFER - TJI JOIST @ INT. WALL

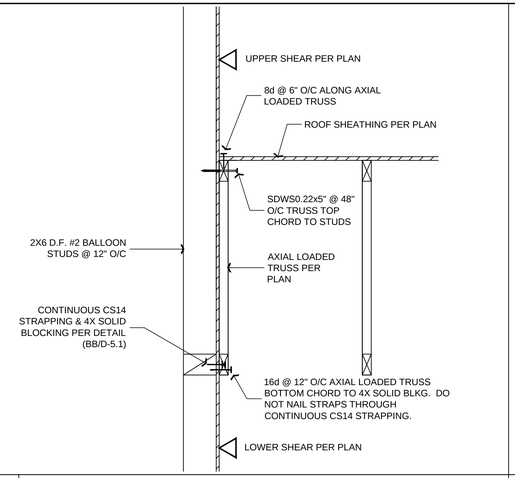

E E SHEAR TRANSFER

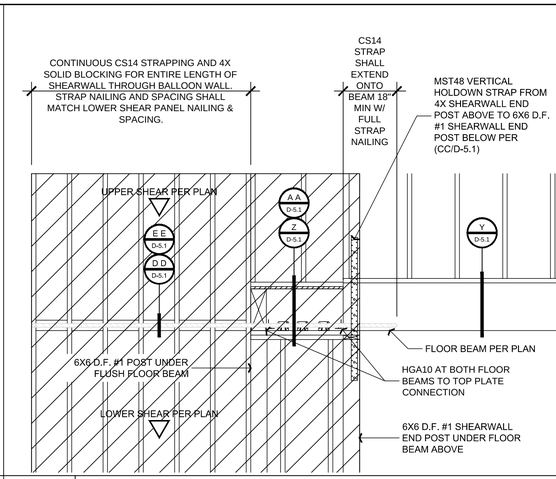

B B DRAG CONNECTION

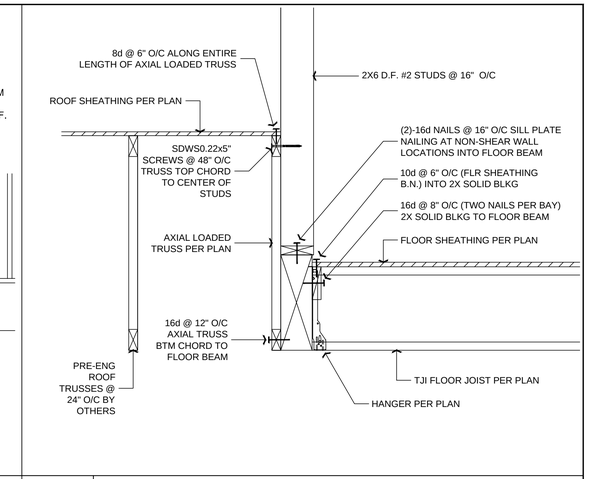

Y SHEAR TRANSFER

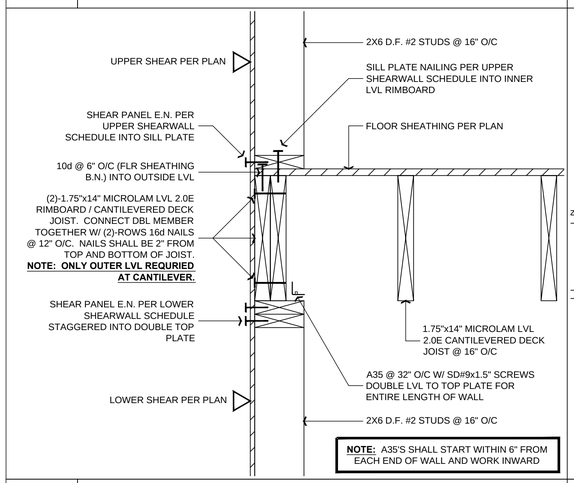

I I SHEAR TRANSFER - TJI PARALLEL TO WALL

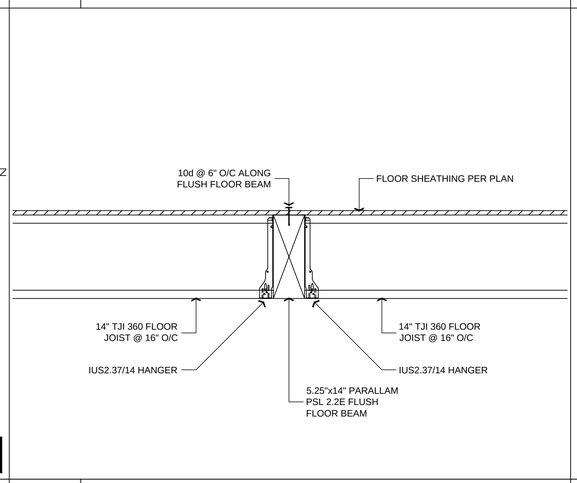

F F DRAG STRUT CONNECTION

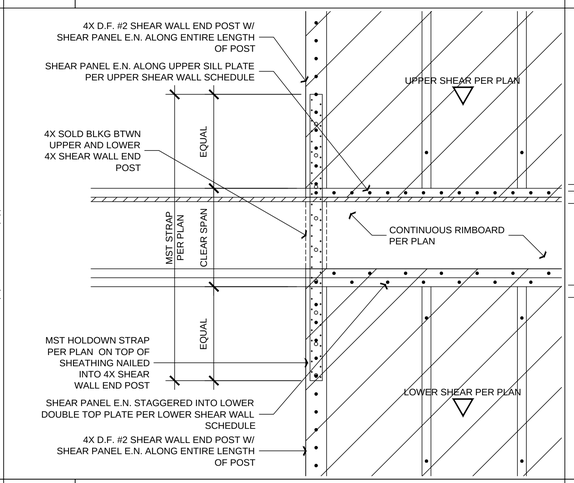

C C TYP MST HOLDOWN ACROSS FLOOR SYSTEM

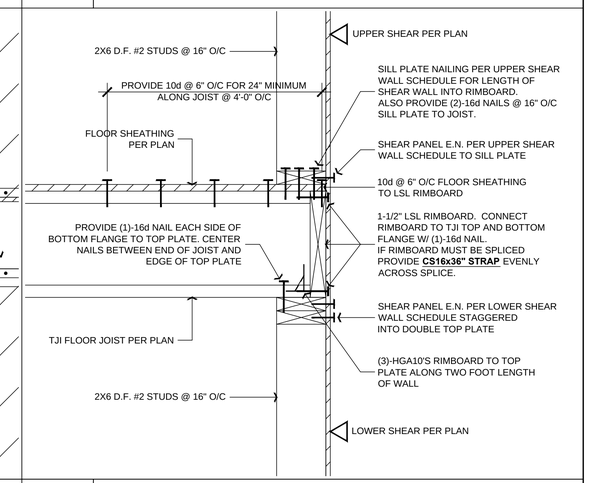

Z SHEAR TRANSFER - TJI PERP. TO WALL

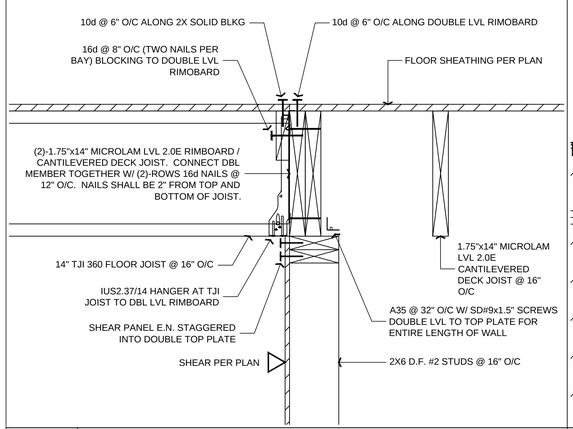

J J SHEAR TRANSFER

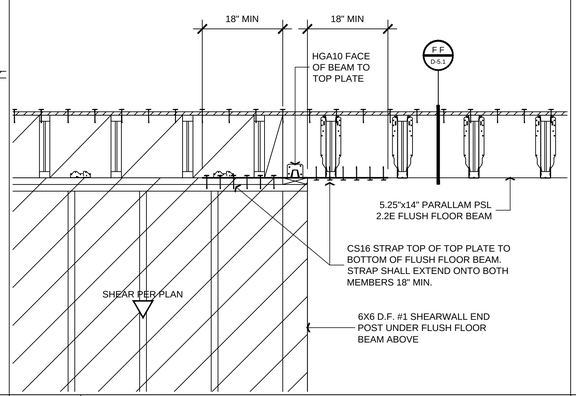

G G DRAG CONNECTION

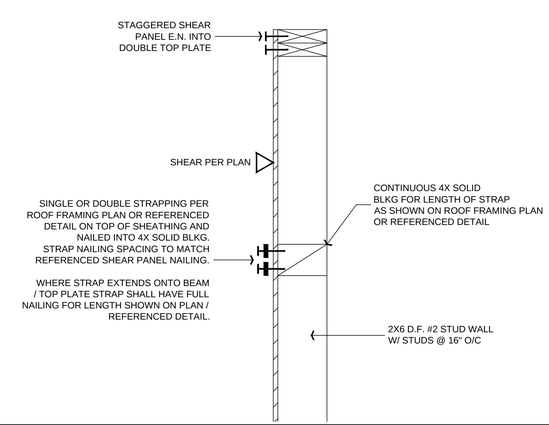

D D TYPICAL STRAPPING ACROSS SHEAR WALL

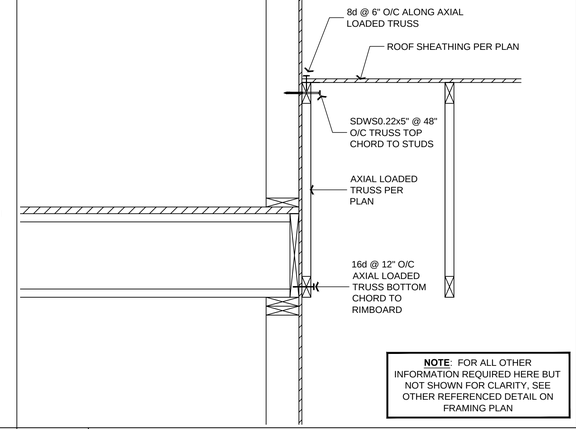

A A SHEAR TRANSFER

ENGINEERING
239-4151
John A. Kudla
Civil Engineering & Structural Design
R.C.E. #50652
610 10th ST. UNIT 'A' PASO ROBLES, CA.

PLAN PREPARED FOR:

ERRON VELA
LOT 147 OF TRACT 1990 - TIMBERLINE DRIVE
PASO ROBLES, CA 93446

REVISION LOG

REV.	DESCRIPTION	DATE

These drawings are the exclusive property of J.K. Engineering and shall be used solely for the purpose of this project on this site. Any use other than the project upon which it is intended for without the written consent of J.K. Engineering and John Kudla is prohibited.

PROJECT NO. 18-0921-17
DRAWN BY DJK
DATE: 09/21/18
SHEET TITLE: VELA HOUSE STRUCTURAL.DWG

STRUCTURAL DETAILS

SHEET NUMBER:

D-5.1

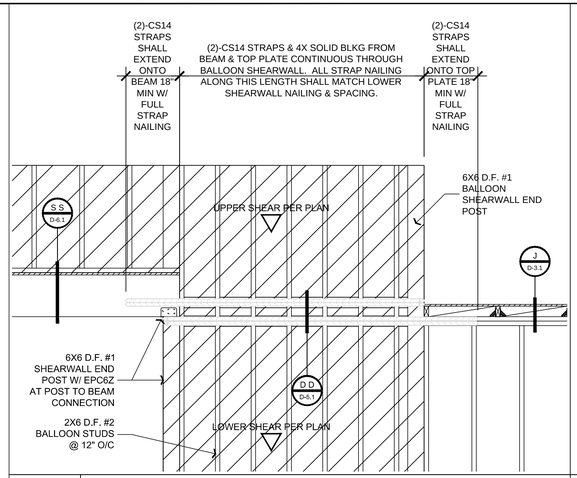

T T DRAG CONNECTION

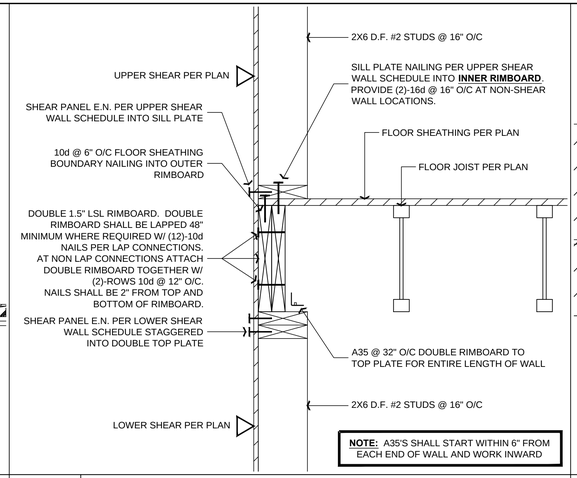

Q Q SHEAR TRANSFER - TJI PARALLEL TO WALL

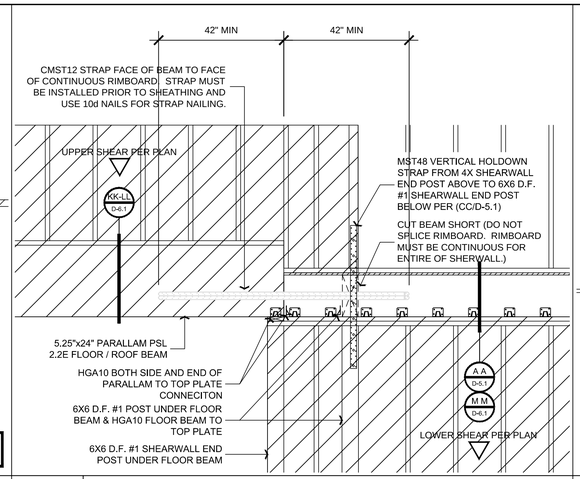

N N DRAG CONNECTION

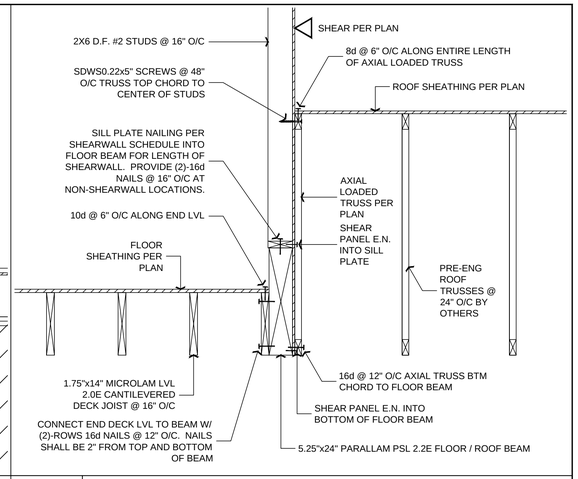

K K SHEAR TRANSFER

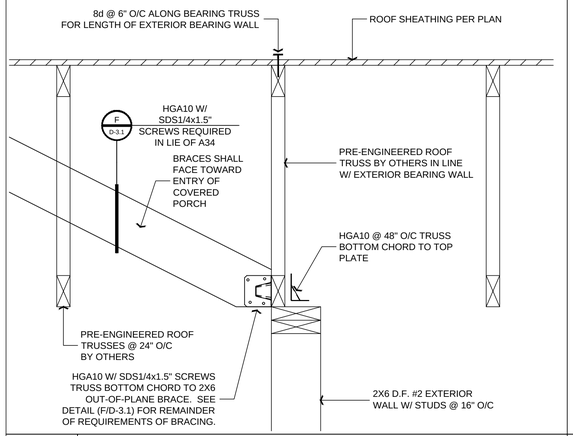

U U SHEAR TRANSFER - BRG WALL TO DIAPH. TIE

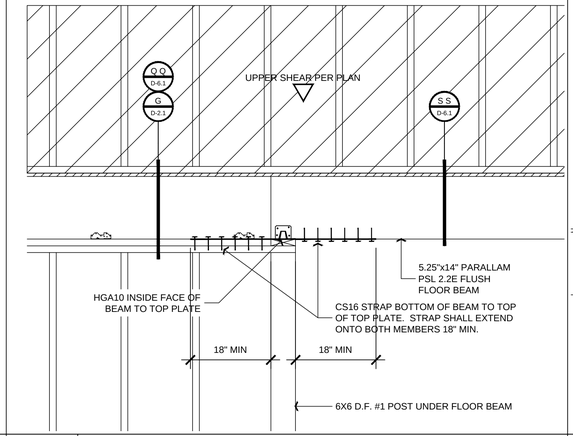

R R DRAG CONNECTION

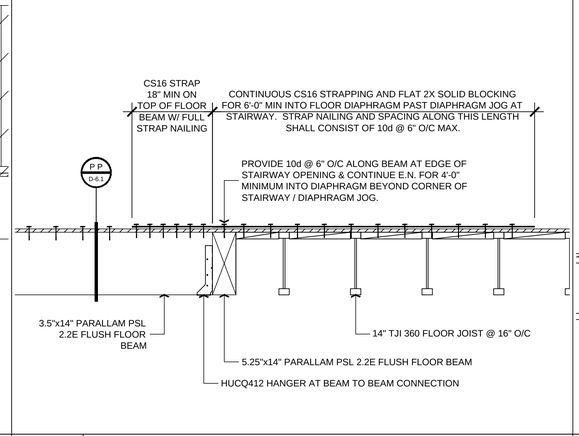

O O DRAG / CHORD FORCE CONNECTION

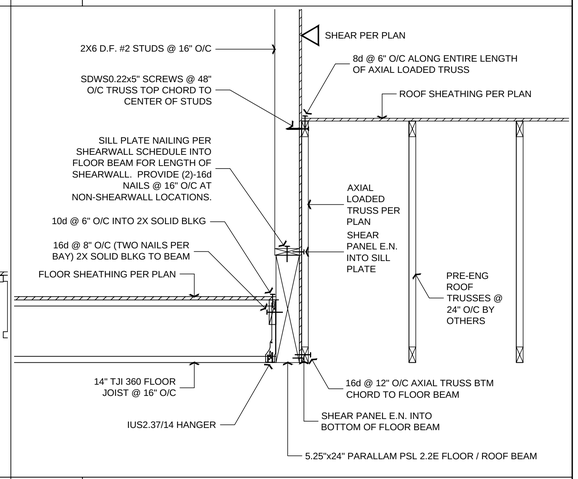

L L SHEAR TRANSFER

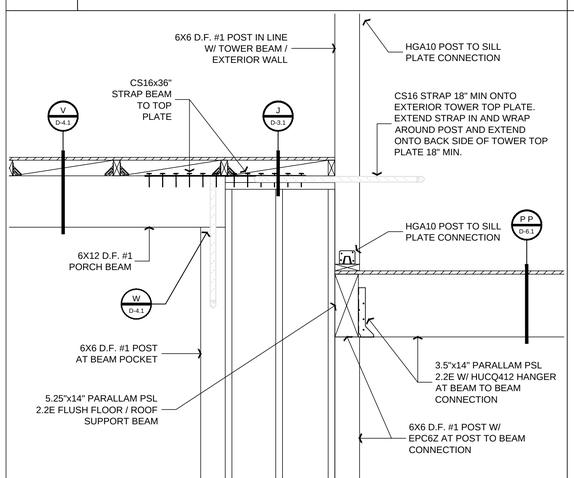

V V RE-ENTRANT CORNER CONNECTION

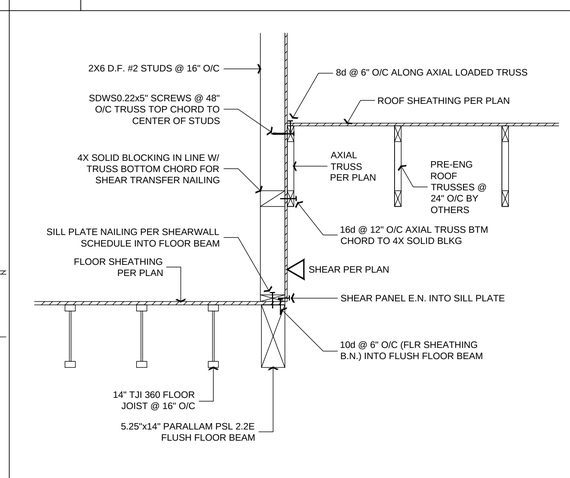

S S SHEAR TRANSFER

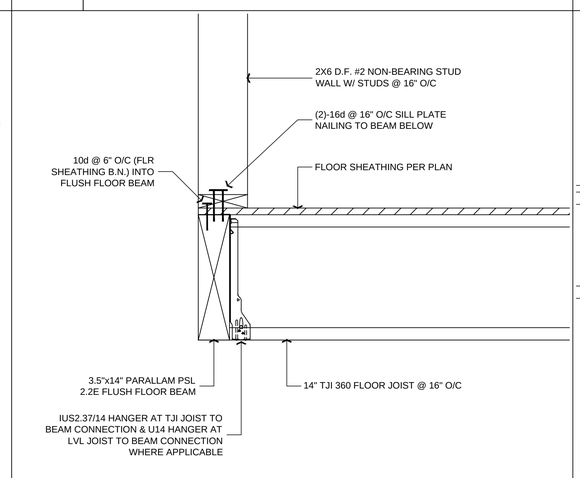

P P DRAG STRUT CONNECTION

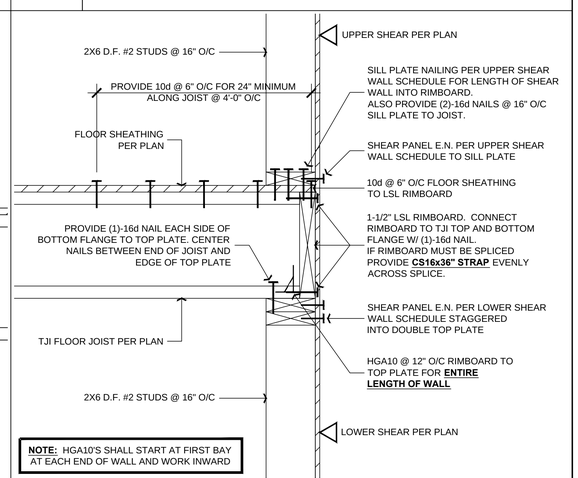

M M SHEAR TRANSFER - TJI PERP. TO WALL

ENGINEERING
239-4151
John A. Kudla
Civil Engineering &
Structural Design
R.C.E. #50652
610 10th ST. UNIT 'A' PASO
ROBLES, CA.

PLAN PREPARED FOR:

ERRON VELA
LOT 147 OF TRACT 1990 - TIMBERLINE DRIVE
PASO ROBLES, CA 93446

REVISION LOG

REV.	DESCRIPTION	DATE

These drawings are the exclusive property of J.K. Engineering and shall be used solely for the purpose of this project on this site. Any use other than the project upon which it is intended for without the written consent of J.K. Engineering and John Kudla is prohibited.

PROJECT NO. 18-0921-17
DRAWN BY DJK
DATE: 09/21/18
SHEET TITLE: VELA HOUSE STRUCTURAL.DWG

STRUCTURAL DETAILS

SHEET NUMBER:

D-6.1

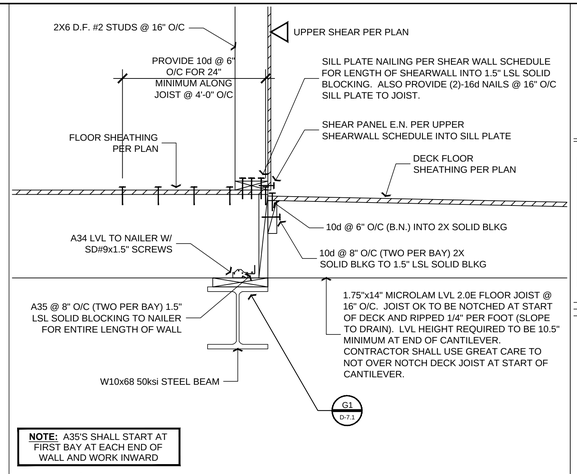

F1 SHEAR TRANSFER

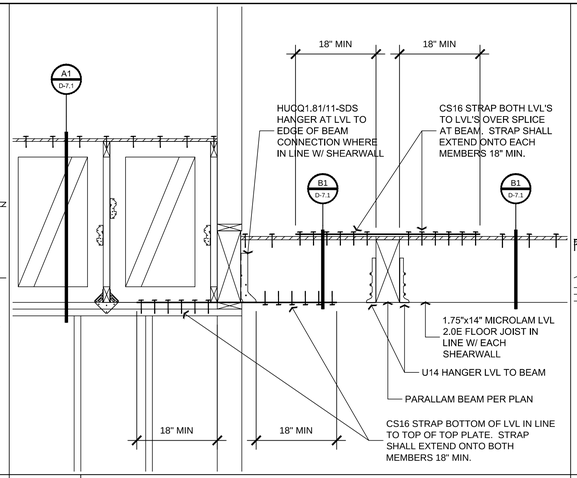

C1 DRAG CONNECTION

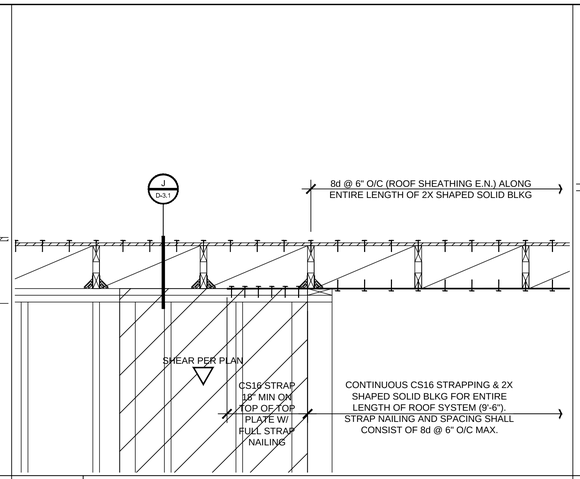

Z Z DRAG / CHORD FORCE CONNECTION

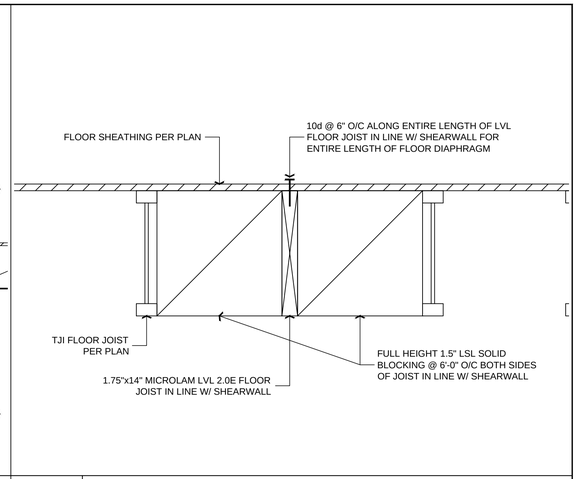

W W DRAG STRUT CONNECTION

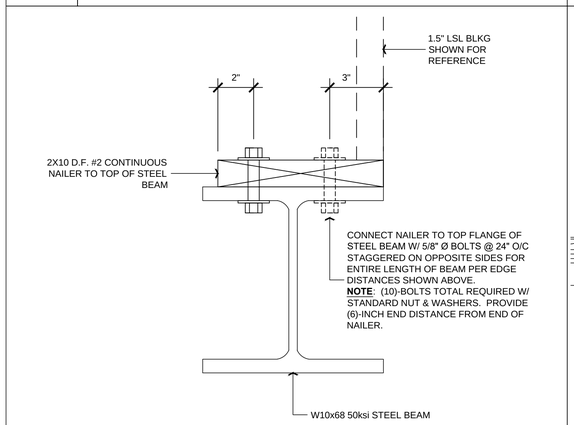

G1 NAILER TO STEEL BEAM

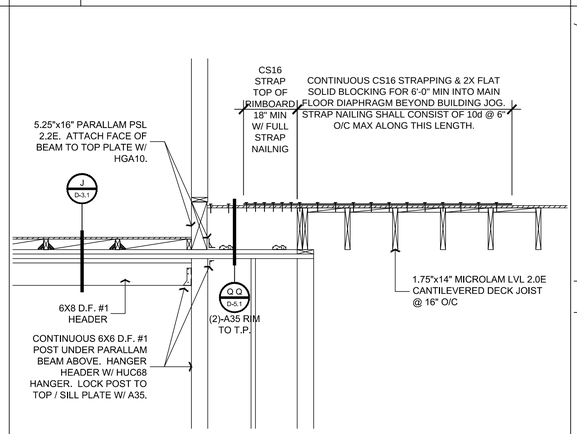

D1 DRAG CONNECTION

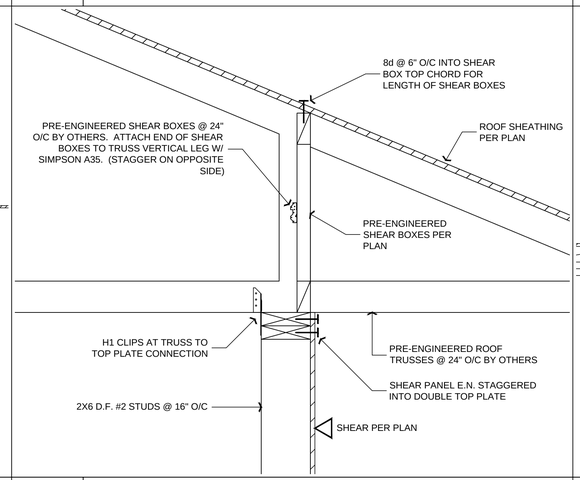

A1 SHEAR TRANSFER

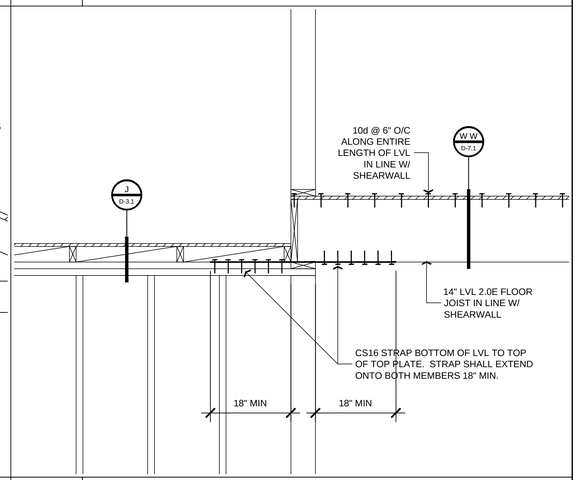

X X DRAG CONNECTION

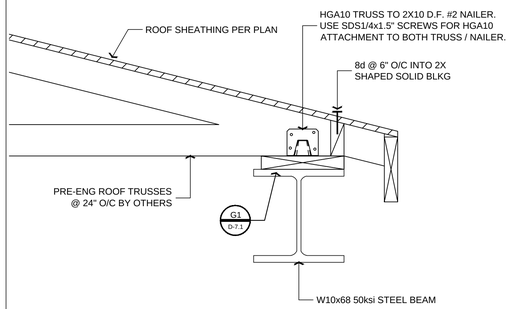

H1 SHEAR TRANSFER

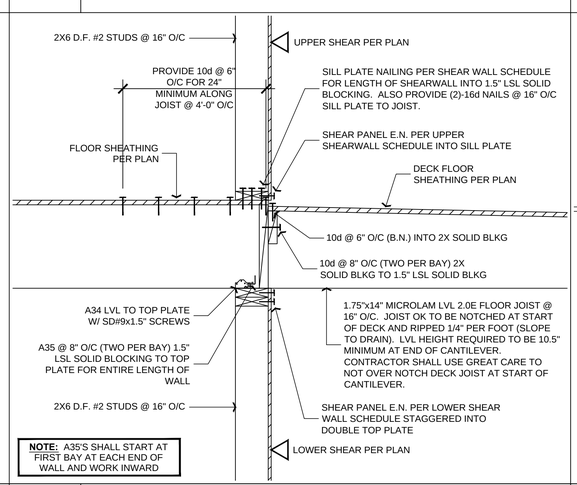

E1 SHEAR TRANSFER

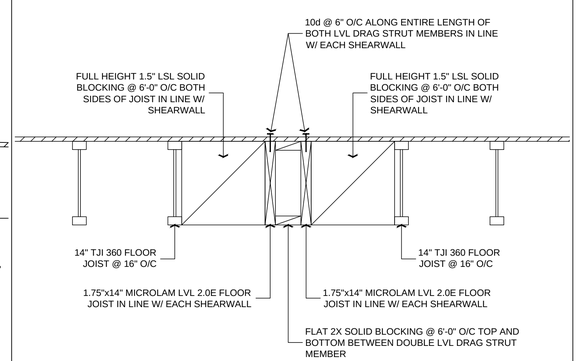

B1 DRAG STRUT CONNECTION

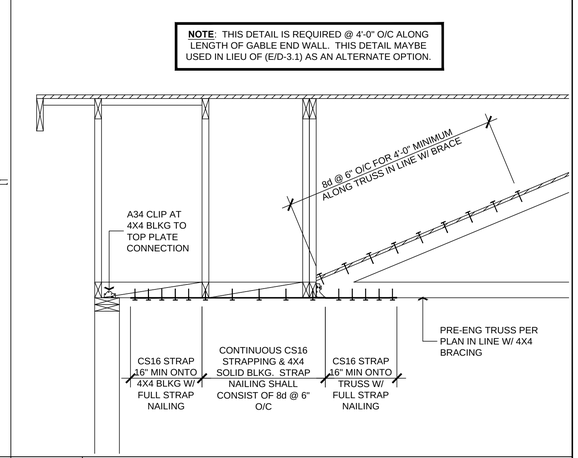

Y Y OUT-OF-PLANE CONNECTION AT GABLE END

ENGINEERING
239-4151
John A. Kudla
Civil Engineering &
Structural Design
R.C.E. #50652
610 10th ST. UNIT 'A' PASO ROBLES, CA.

PLAN PREPARED FOR:

ERRON VELA
LOT 147 OF TRACT 1990 - TIMBERLINE DRIVE
PASO ROBLES, CA 93446

REVISION LOG

REV.	DESCRIPTION	DATE

These drawings are the exclusive property of J.K. Engineering and shall be used solely for the purpose of this project on this site. Any use other than the project upon which it is intended for without the written consent of J.K. Engineering and John Kudla is prohibited.

PROJECT NO. 18-0921-17
DRAWN BY DJK
DATE: 09/21/18
SHEET TITLE: VELA HOUSE STRUCTURAL.DWG

STRUCTURAL DETAILS

SHEET NUMBER:

D-7.1

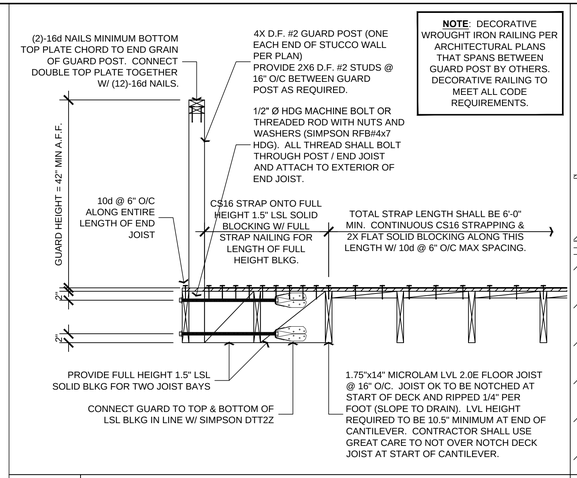

R1 GUARD CONNECTION - PERPEND. TO JOIST

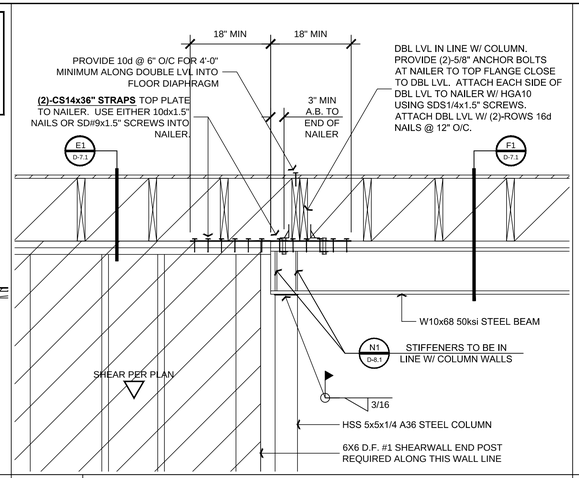

O1 DRAG / OUT-OF-PLANE CONNECTION

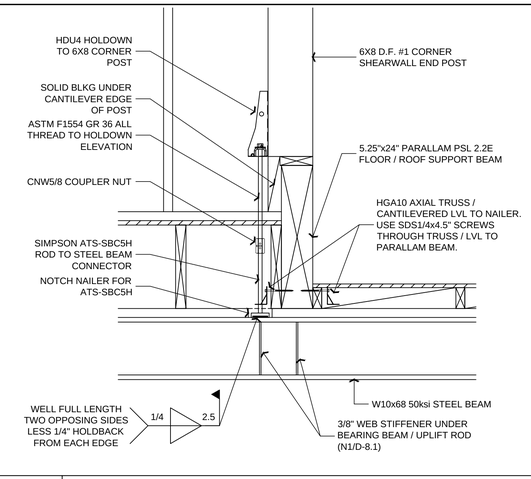

L1 HOLDOWN TO STEEL BEAM

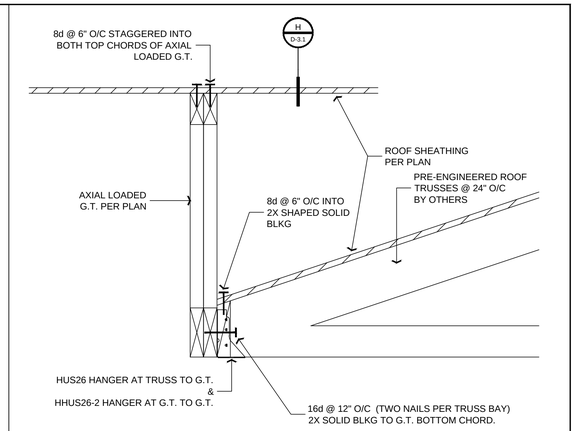

I1 SHEAR TRANSFER - TRUSS TO G.T.

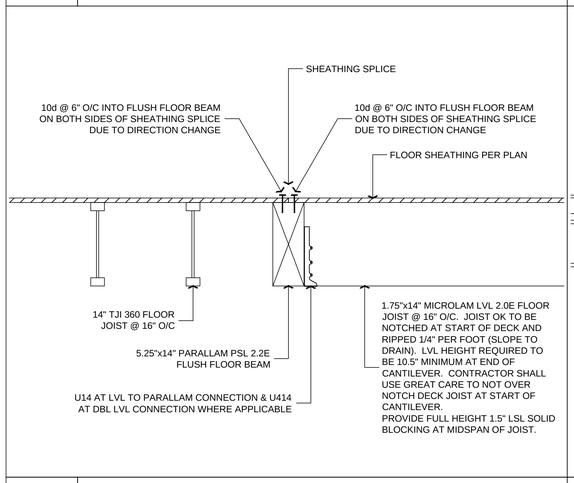

S1 SHEAR TRANSFER

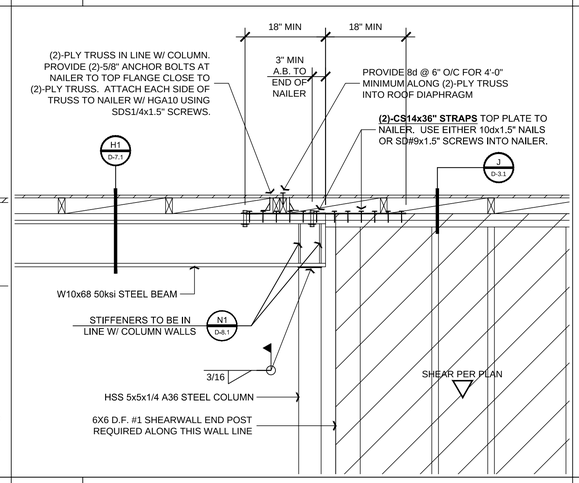

P1 DRAG / OUT-OF-PLANE CONNECTION

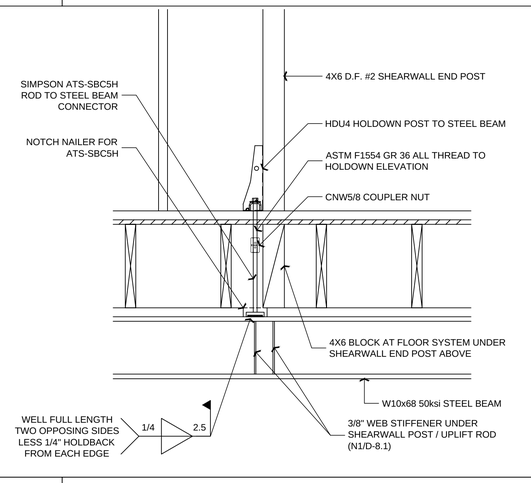

M1 HOLDOWN TO STEEL BEAM

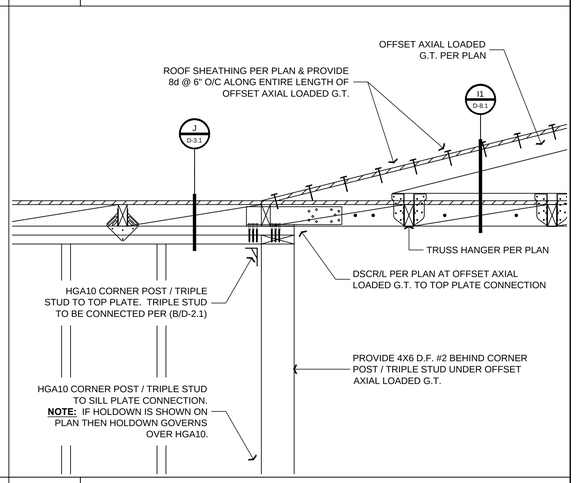

J1 DRAG CONNECTION: OFFSET G.T. TO TOP PL.

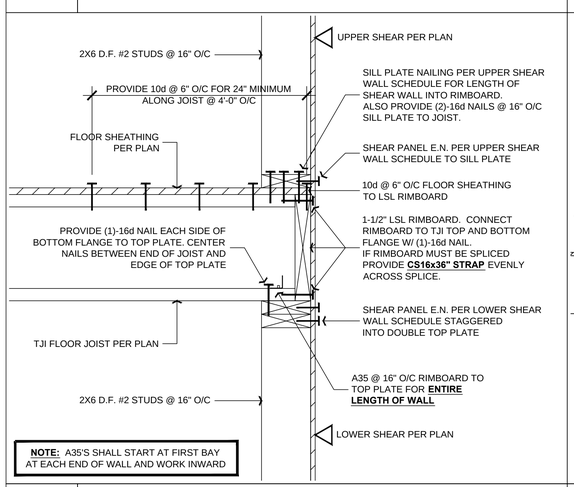

T1 SHEAR TRANSFER - TJI PERP. TO WALL

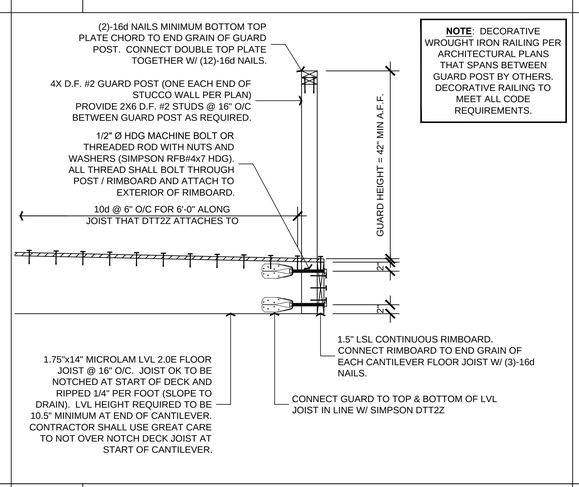

Q1 GUARD CONNECTION - PARALLEL TO JOIST

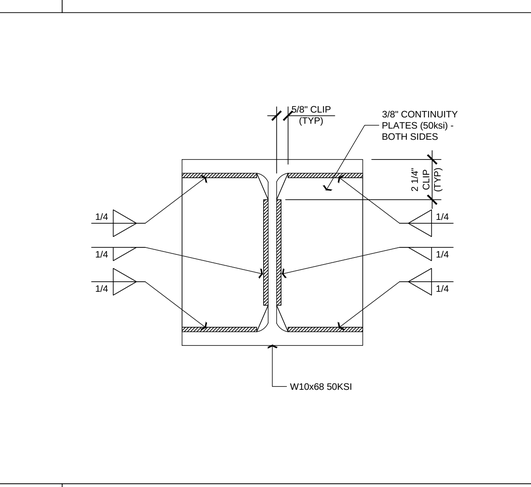

N1 WEB STIFFENER DETAIL

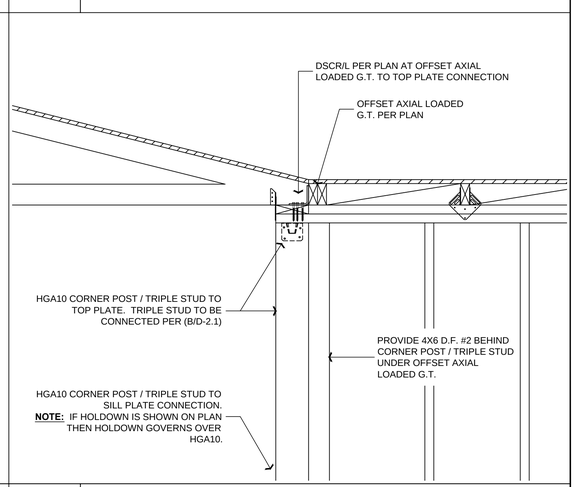

K1 DRAG CONNECTION: OFFSET G.T. TO TOP PL.

ENGINEERING
239-4151
John A. Kudla
Civil Engineering & Structural Design
R.C.E. #50652
610 10th ST. UNIT "A" PASO ROBLES, CA.

PLAN PREPARED FOR:

ERRON VELA
LOT 147 OF TRACT 1990 - TIMBERLINE DRIVE
PASO ROBLES, CA 93446

REVISION LOG

REV.	DESCRIPTION	DATE

These drawings are the exclusive property of J.K. Engineering and shall be used solely for the purpose of this project on this site. Any use other than the project upon which it is intended for without the written consent of J.K. Engineering and John Kudla is prohibited.

PROJECT NO. 18-0921-17
DRAWN BY DJK
DATE: 09/21/18
SHEET TITLE: VELA HOUSE STRUCTURAL.DWG

STRUCTURAL DETAILS

SHEET NUMBER:

D-8.1

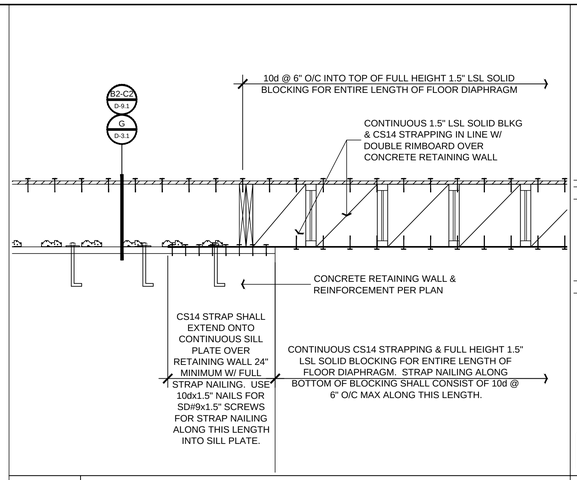

D2 DRAG CONNECTION

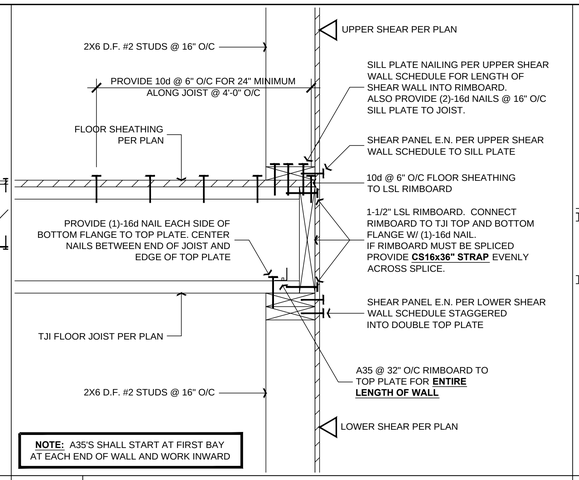

A2 SHEAR TRANSFER - TJI PERP. TO WALL

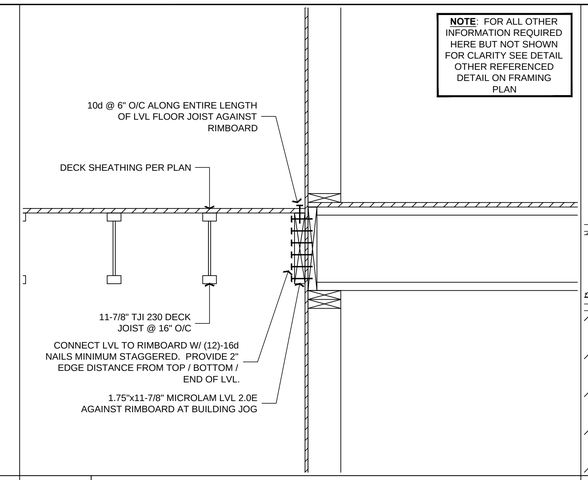

X1 DRAG / GRAVITY CONNECTION

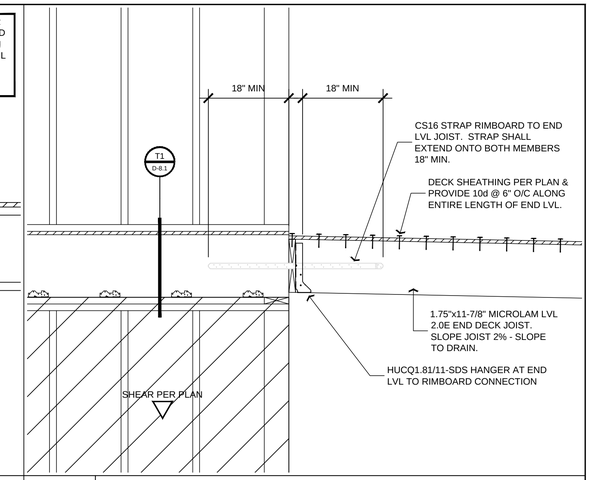

U1 DRAG CONNECTION

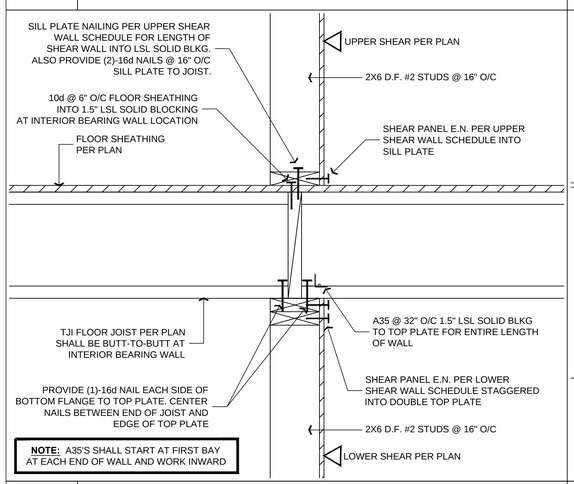

E2 SHEAR TRANSFER - TJI JOIST @ INT. WALL

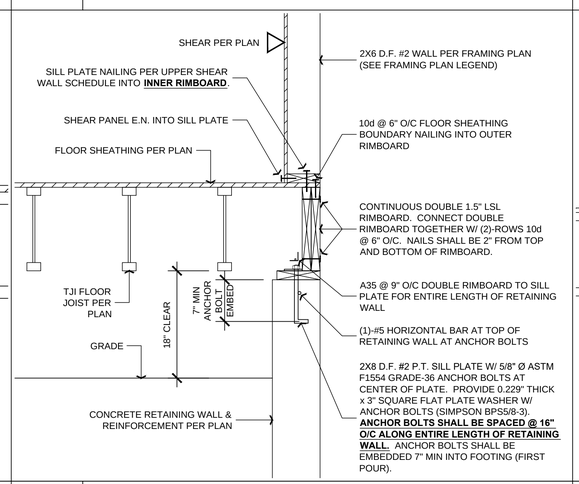

B2 SHEAR TRANSFER

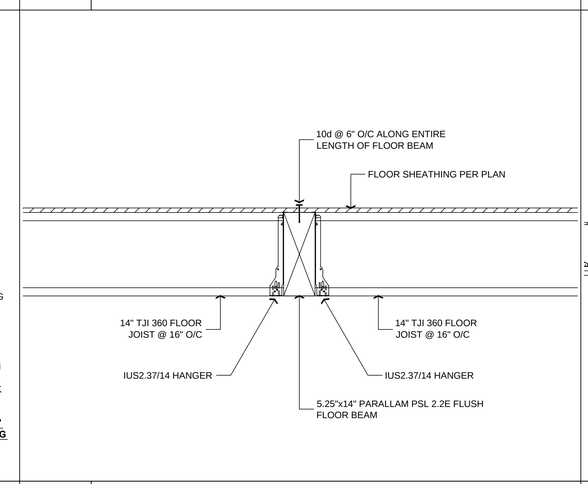

Y1 FLOOR BEAM CONNECTION

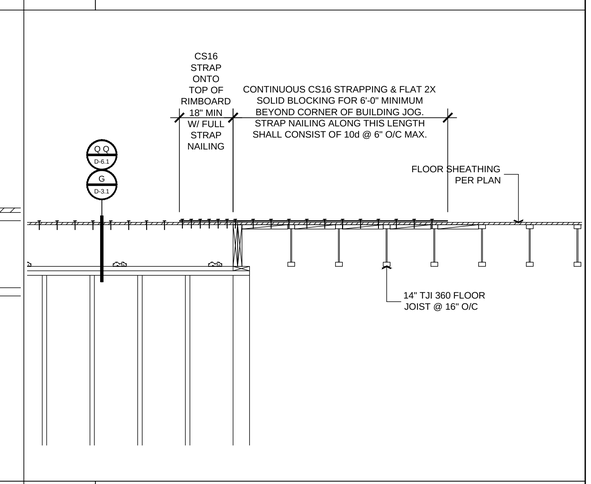

V1 DRAG CONNECTION

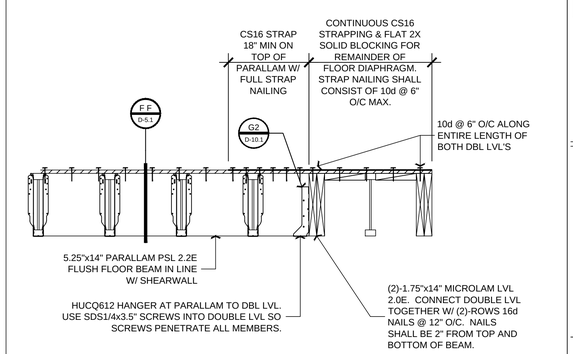

F2 DRAG CONNECTION

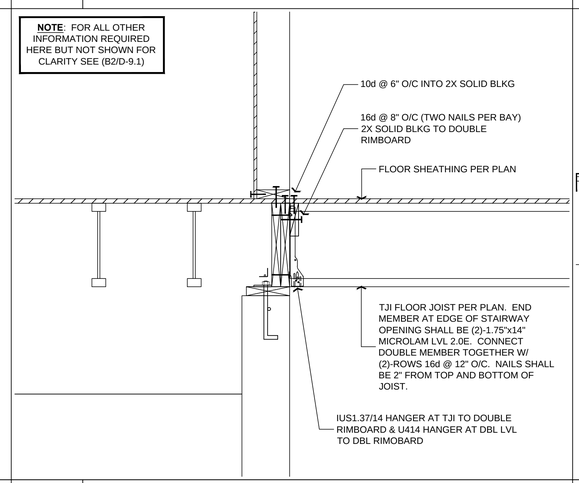

C2 SHEAR TRANSFER

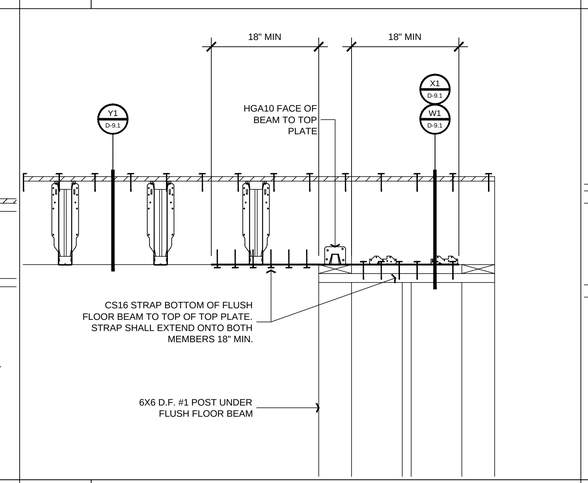

Z1 DRAG CONNECTION

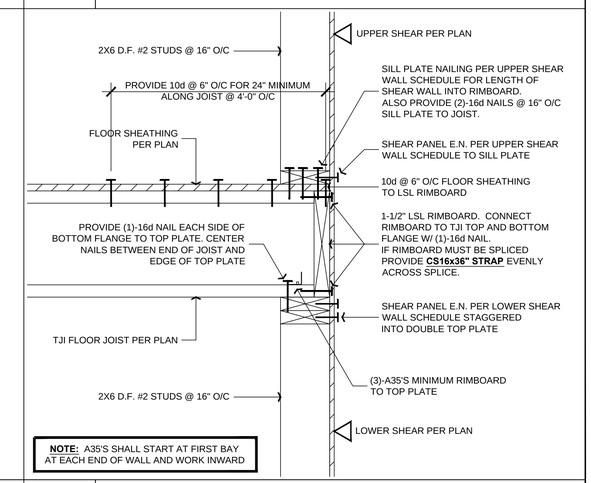

W1 SHEAR TRANSFER - TJI PERP. TO WALL

ENGINEERING
239-4151
John A. Kudla
Civil Engineering &
Structural Design
R.C.E. #50652
610 10th ST. UNIT 'A' PASO
ROBLES, CA.

PLAN PREPARED FOR:

ERRON VELA

LOT 147 OF TRACT 1990 - TIMBERLINE DRIVE
PASO ROBLES, CA 93446

REVISION LOG

REV.	DESCRIPTION	DATE

These drawings are the exclusive property of J.K. Engineering and shall be used solely for the purpose of this project on this site. Any use other than the project upon which it is intended for without the written consent of J.K. Engineering and John Kudla is prohibited.

PROJECT NO. 18-0921-17

DRAWN BY DJK

DATE: 09/21/18

SHEET TITLE: VELA HOUSE STRUCTURAL.DWG

STRUCTURAL DETAILS

SHEET NUMBER:

D-9.1

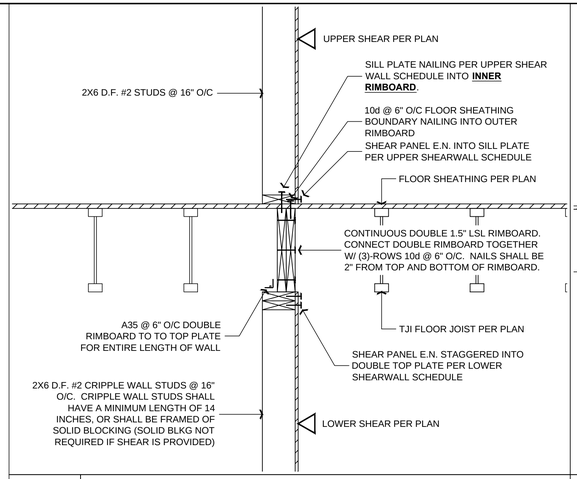

P2 SHEAR TRANSFER

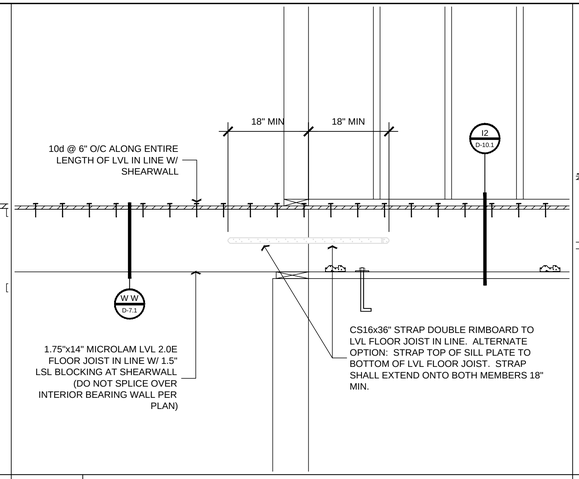

M2 DRAG CONNECTION

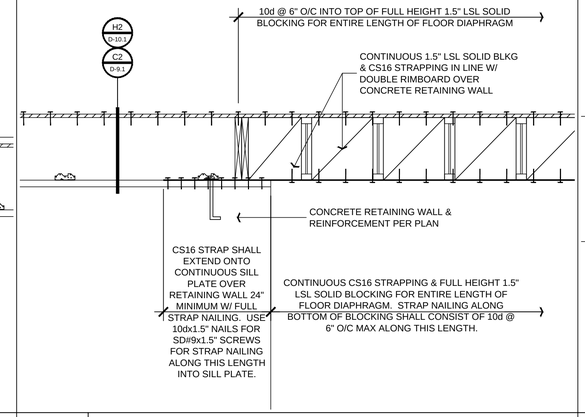

J2 DRAG CONNECTION

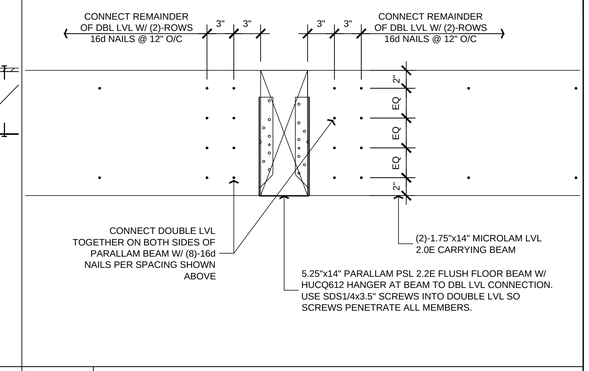

G2 DOUBLE LVL CONNECTION AT POINT LOAD

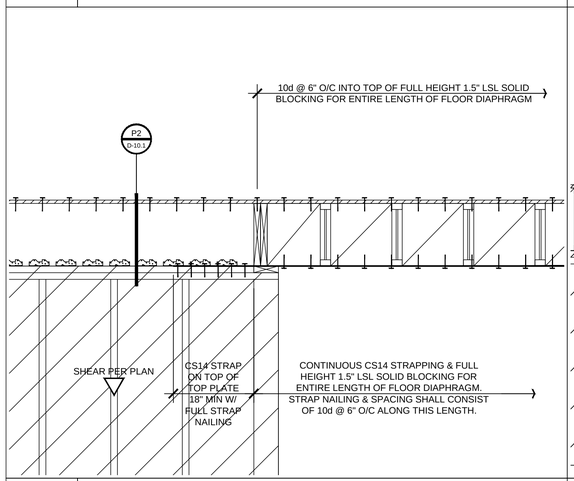

Q2 DRAG CONNECTION

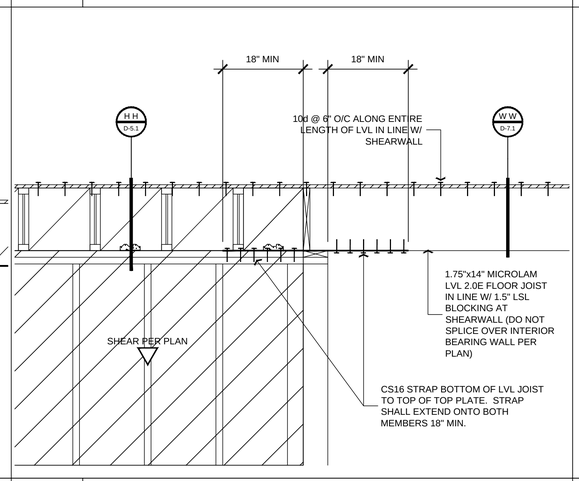

N2 DRAG CONNECTION

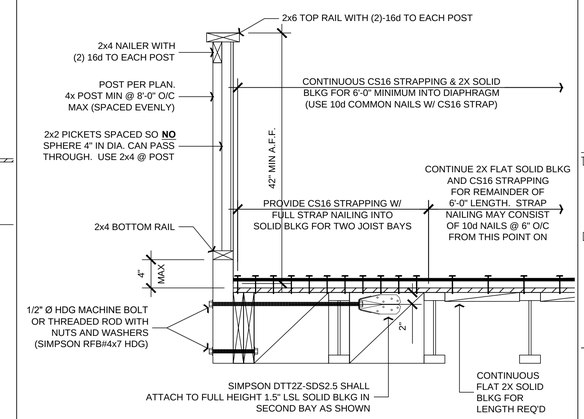

K2 GUARD DETAIL - PERPENDICULAR TO JOIST

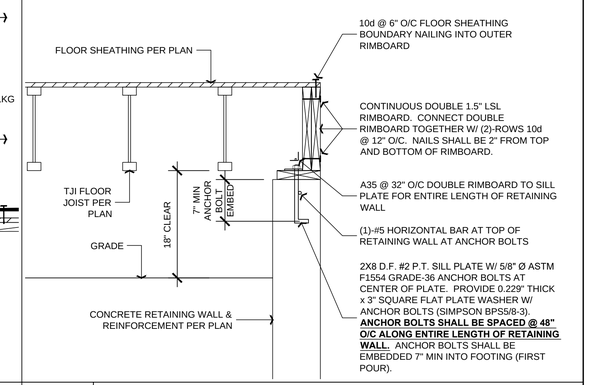

H2 SHEAR TRANSFER

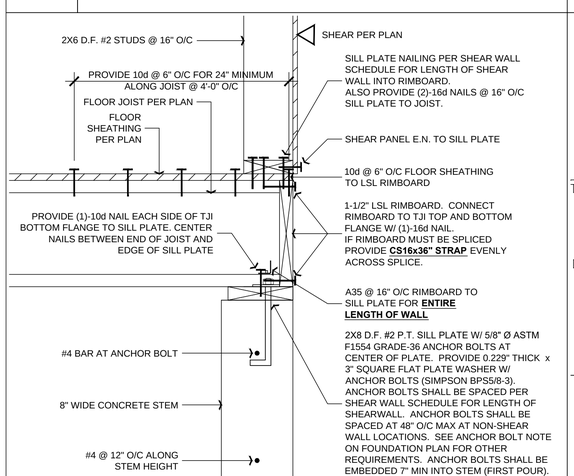

R2 SHEAR TRANSFER

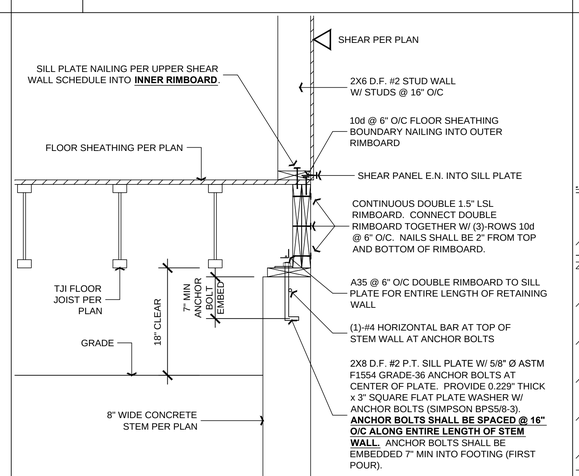

O2 SHEAR TRANSFER

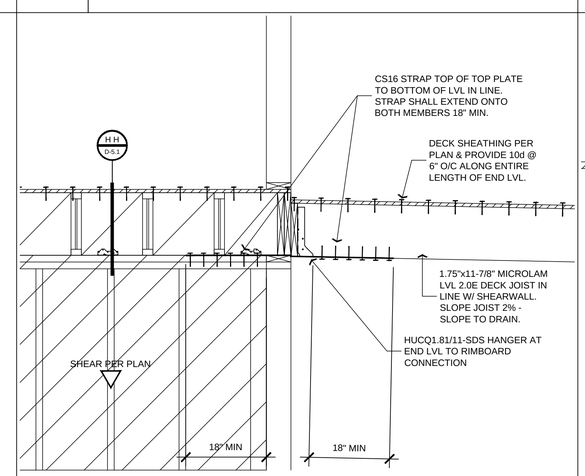

L2 DRAG CONNECTION

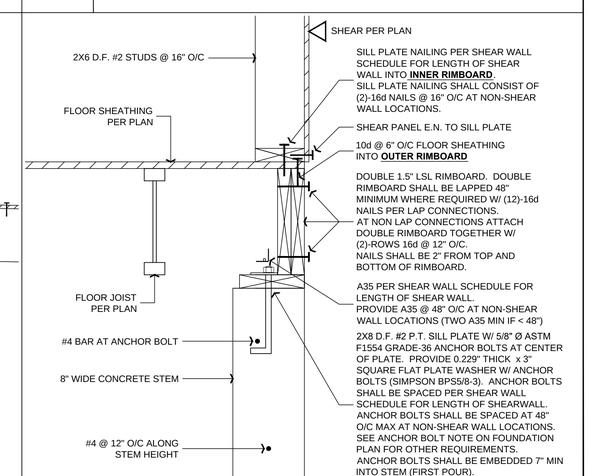

I2 SHEAR TRANSFER

ENGINEERING
239-4151
John A. Kudla
Civil Engineering &
Structural Design
R.C.E. #50652
610 10th ST. UNIT 'A' PASO ROBLES, CA.

PLAN PREPARED FOR:

ERRON VELA
LOT 147 OF TRACT 1990 - TIMBERLINE DRIVE
PASO ROBLES, CA 93446

REVISION LOG

REV.	DESCRIPTION	DATE

These drawings are the exclusive property of J.K. Engineering and shall be used solely for the purpose of this project on this site. Any use other than the project upon which it is intended for without the written consent of J.K. Engineering and John Kudla is prohibited.

PROJECT NO. 18-0921-17
DRAWN BY DJK
DATE: 09/21/18
SHEET TITLE: VELA HOUSE STRUCTURAL.DWG

STRUCTURAL DETAILS

SHEET NUMBER:

D-10.1

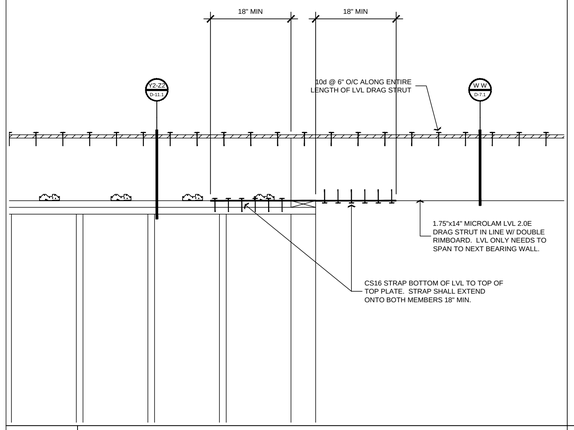

B3 DRAG CONNECTION

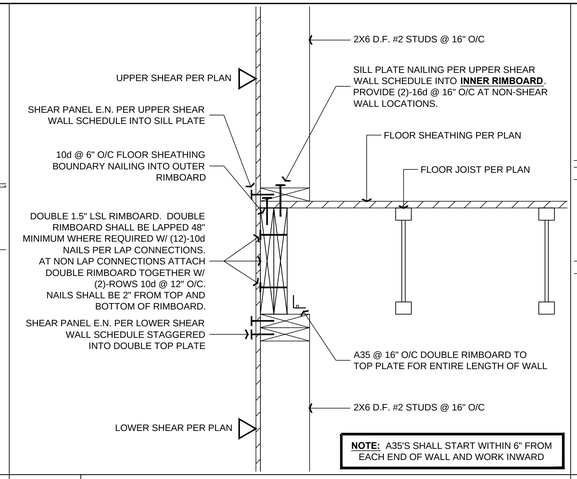

Y2 SHEAR TRANSFER - TJI PARALLEL TO WALL

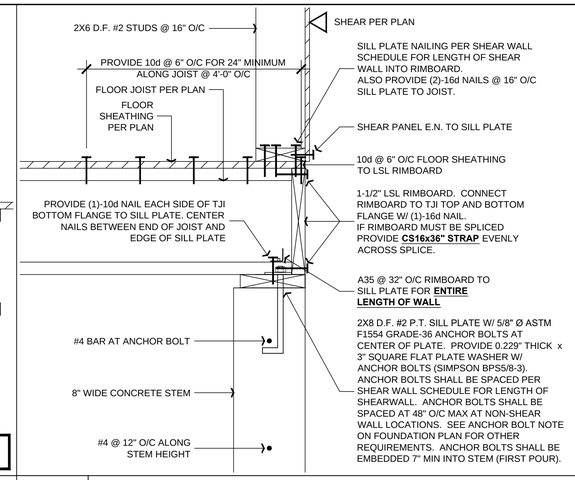

V2 SHEAR TRANSFER

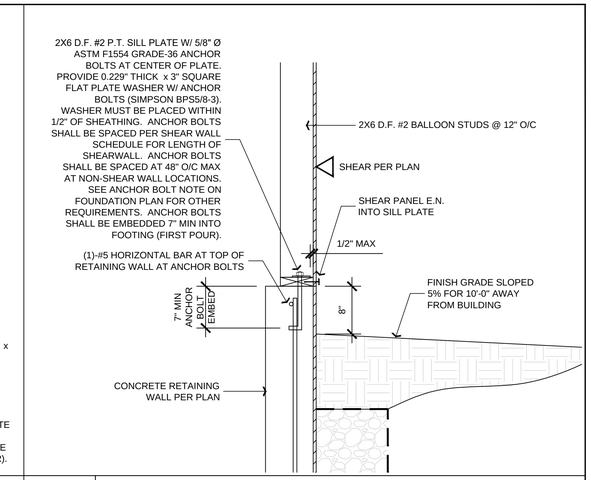

S2 SHEAR TRANFSER

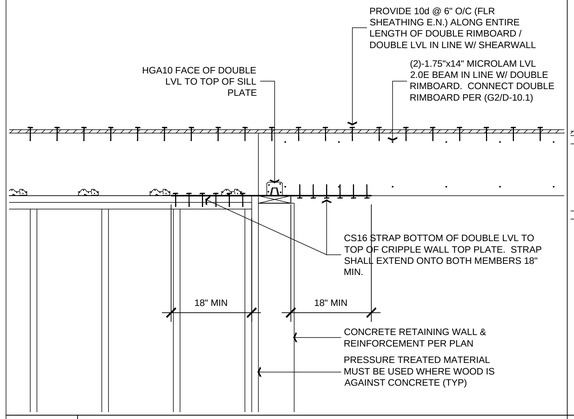

C3 DRAG CONNECTION

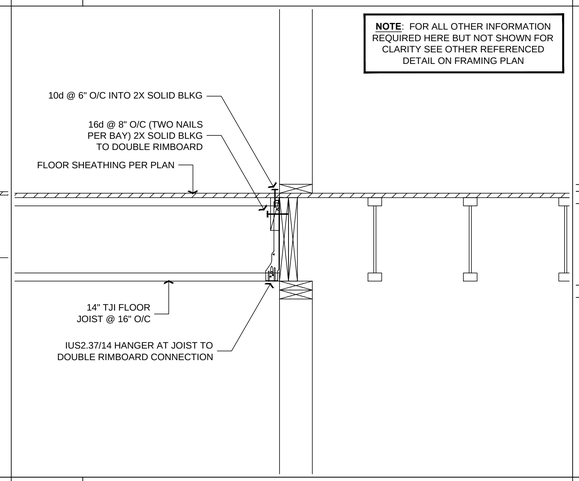

Z2 SHEAR TRANSFER

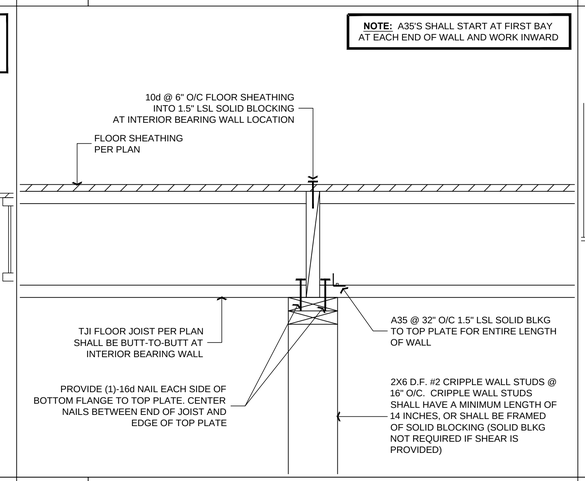

W2 SHEAR TRANSFER - TJI JOIST @ INT. WALL

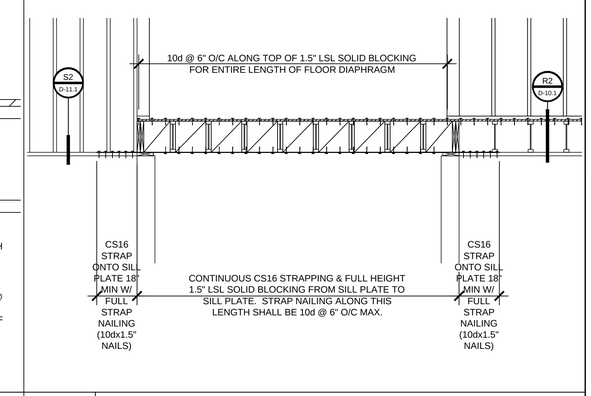

T2 DRAG CONNECTION

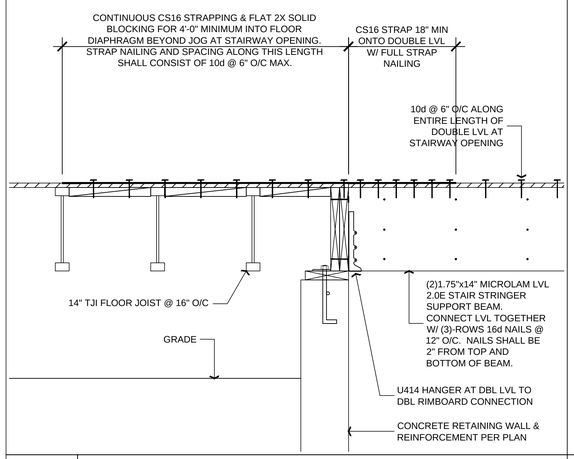

D3 DRAG CONNECTION

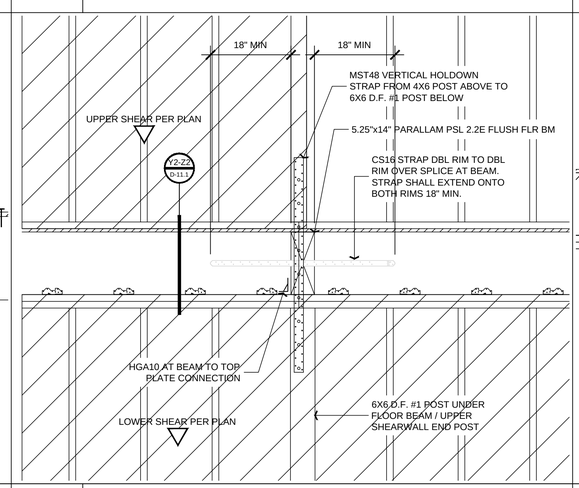

A3 BEAM CONNECTION TO WALL

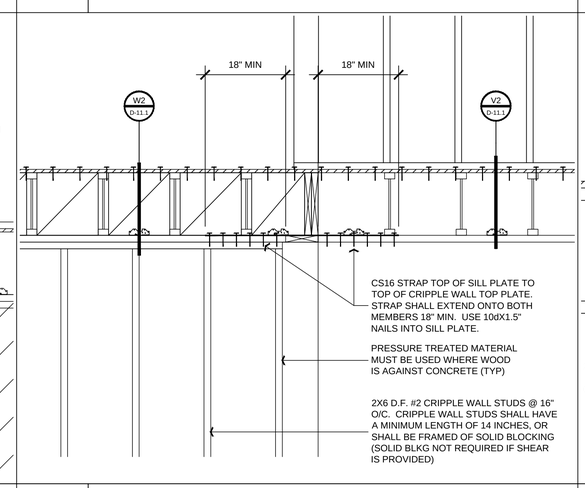

X2 DRAG CONNECTION TO STEMWALL

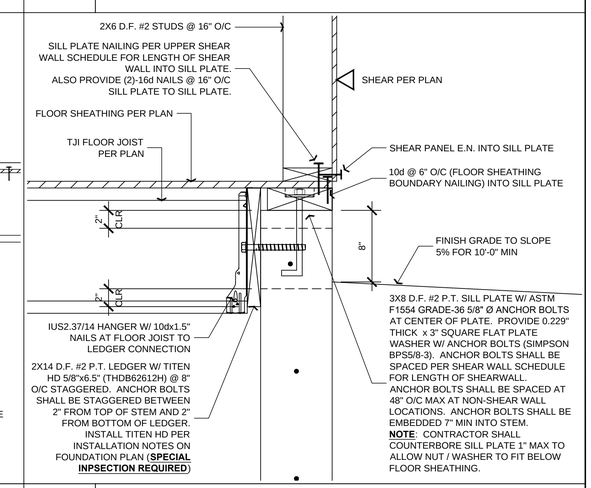

U2 SHEAR TRANSFER

ENGINEERING
239-4151
John A. Kudla
Civil Engineering &
Structural Design
R.C.E. #50652
610 10th ST. UNIT 'A' PASO
ROBLES, CA.

PLAN PREPARED FOR:

ERRON VELA
LOT 147 OF TRACT 1990 - TIMBERLINE DRIVE
PASO ROBLES, CA 93446

REVISION LOG

REV.	DESCRIPTION	DATE

These drawings are the exclusive property of J.K. Engineering and shall be used solely for the purpose of this project on this site. Any use other than the project upon which it is intended for without the written consent of J.K. Engineering and John Kudla is prohibited.

PROJECT NO.	18-0921-17
DRAWN BY	DJK
DATE:	09/21/18
SHEET TITLE:	VELA HOUSE STRUCTURAL.DWG

STRUCTURAL DETAILS

SHEET NUMBER:

D-11.1

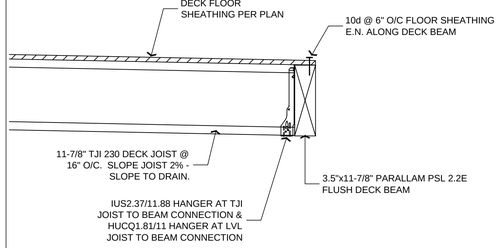

N3 SHEAR TRANSFER

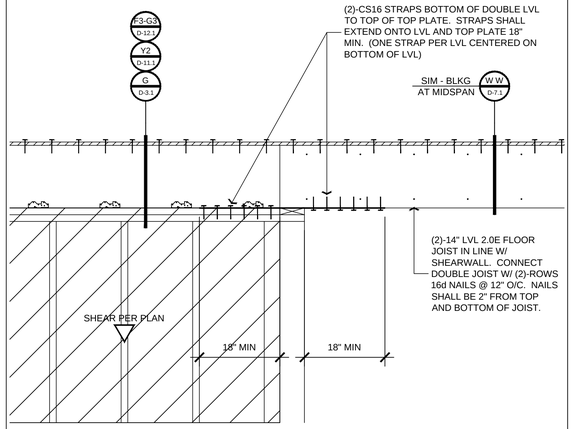

K3 DRAG CONNECTION

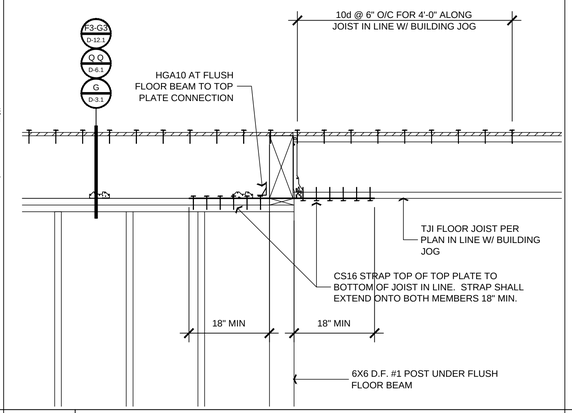

H3 DRAG CONNECTION

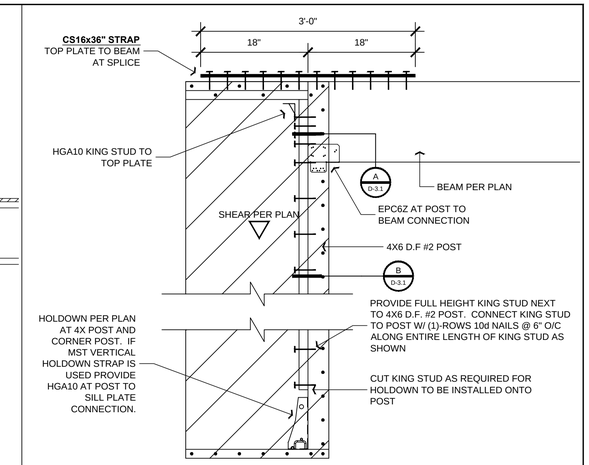

E3 BEAM TO SHEARWALL CONNECTION

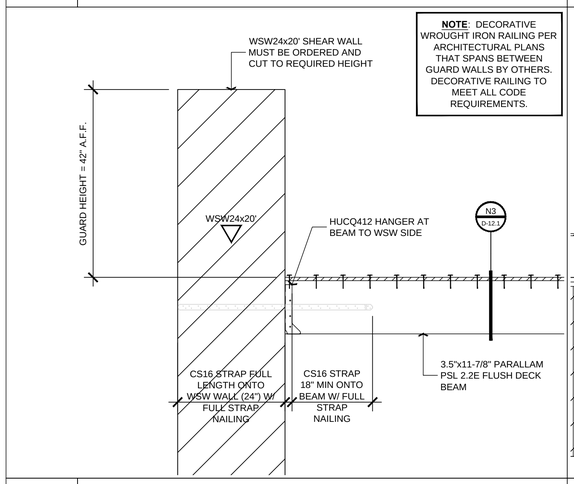

O3 DRAG CONNECTION

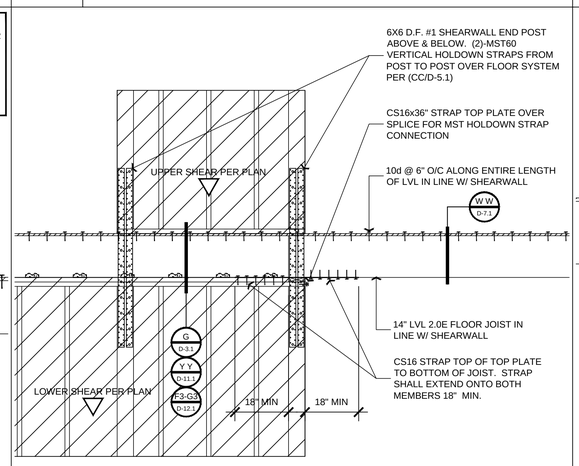

L3 DRAG CONNECTION

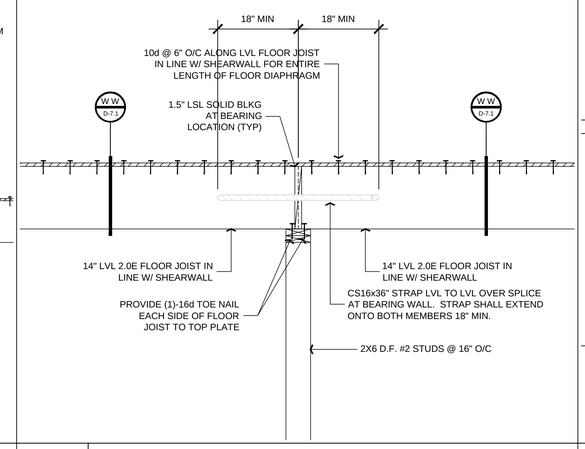

I3 DRAG CONNECTION OVER BEARING WALL

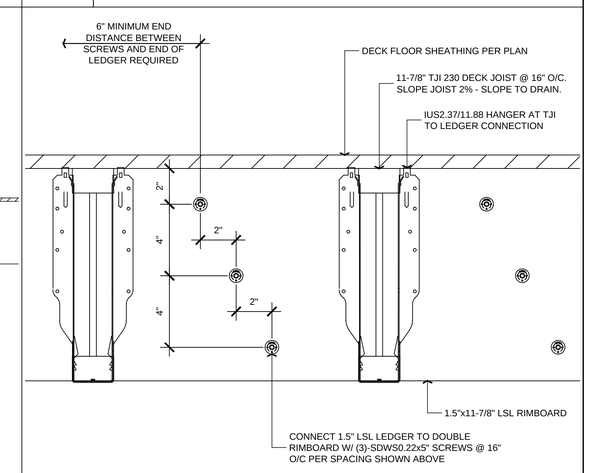

F3 DECK LEDGER CONNECTION

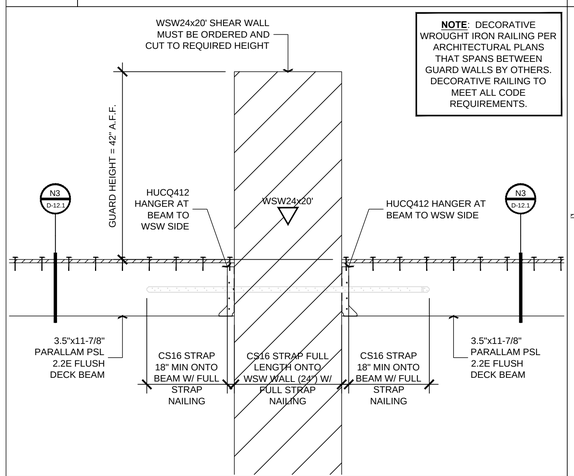

P3 DRAG CONNECTION

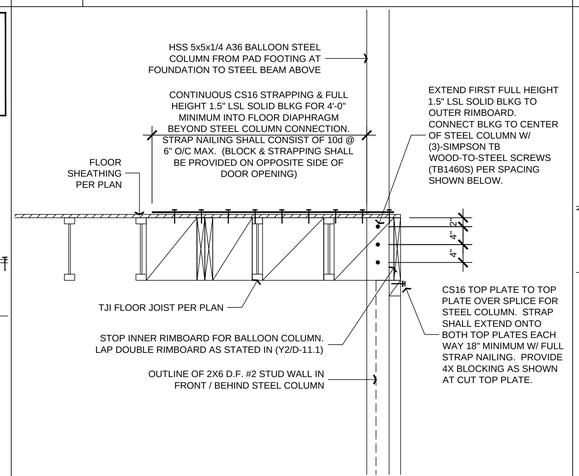

M3 OUT-OF-PLANE CONNECTION: STEEL COLUMN

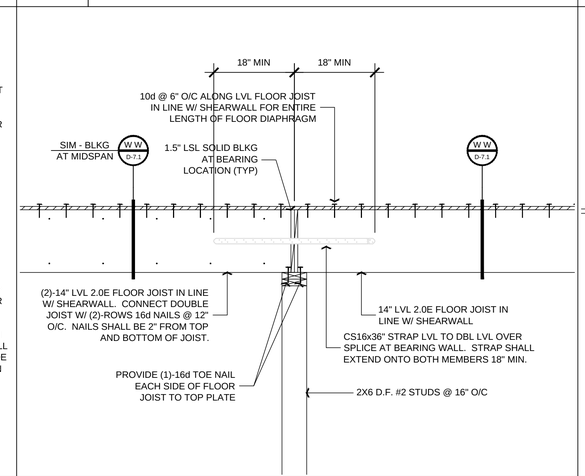

J3 DRAG CONNECTION OVER BEARING WALL

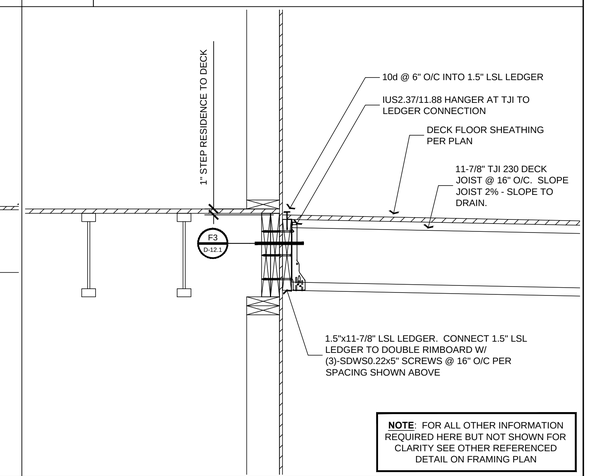

G3 DECK LEDGER CONNECTION

ENGINEERING
239-4151
John A. Kudla
Civil Engineering & Structural Design
R.C.E. #50652
610 10th ST. UNIT 'A' PASO ROBLES, CA.

PLAN PREPARED FOR:

ERRON VELA
LOT 147 OF TRACT 1990 - TIMBERLINE DRIVE
PASO ROBLES, CA 93446

REVISION LOG

REV.	DESCRIPTION	DATE

These drawings are the exclusive property of J.K. Engineering and shall be used solely for the purpose of this project on this site. Any use other than the project upon which it is intended for without the written consent of J.K. Engineering and John Kudla is prohibited.

PROJECT NO. 18-0921-17
DRAWN BY DJK
DATE: 09/21/18
SHEET TITLE: VELA HOUSE STRUCTURAL.DWG

STRUCTURAL DETAILS

SHEET NUMBER:
D-12.1

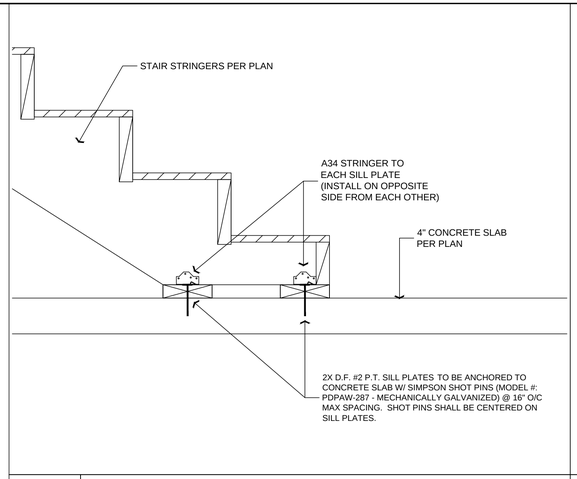

Z3 STAIR STRINGER TO SLAB CONNECTION

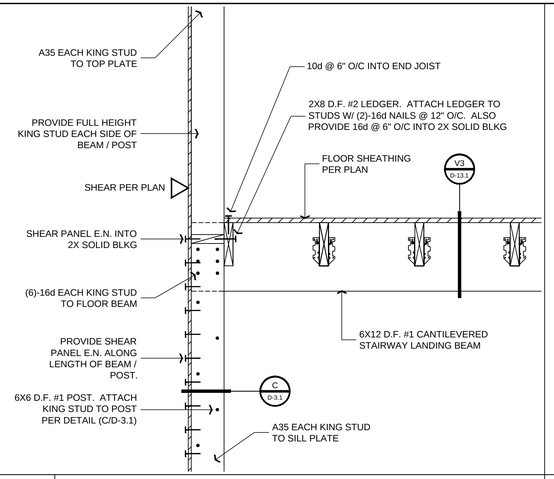

W3 STAIRWAY LANDING BEAM TO WALL

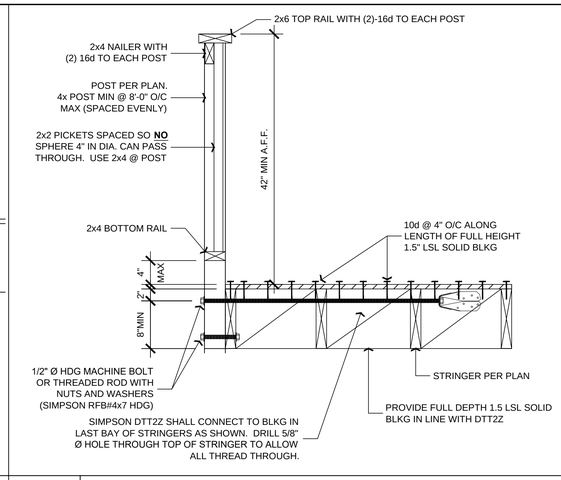

T3 GUARD DETAIL - STRINGER OPTION - 1

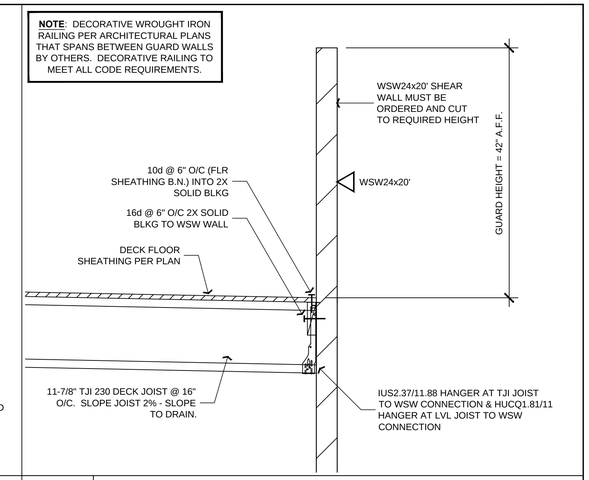

Q3 SHEAR TRANFSER

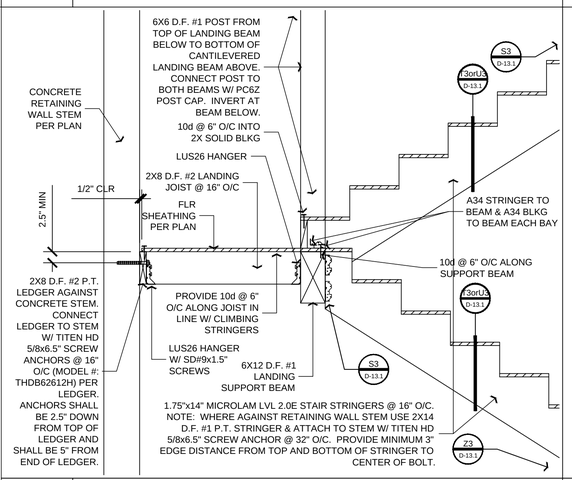

X3 LOWER STAIRWAY LANDING CONNECTION

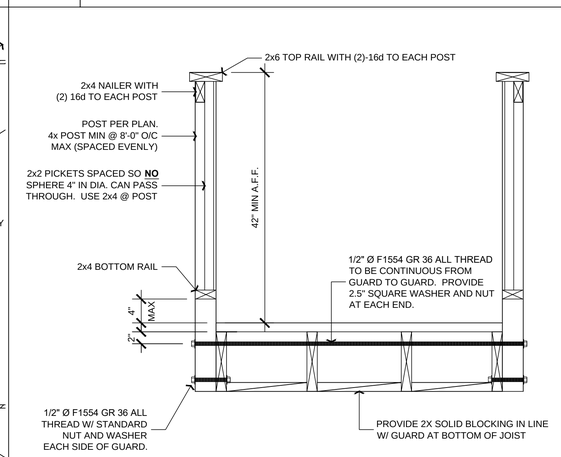

U3 GUARD DETAIL - STRINGER OPTION - 2

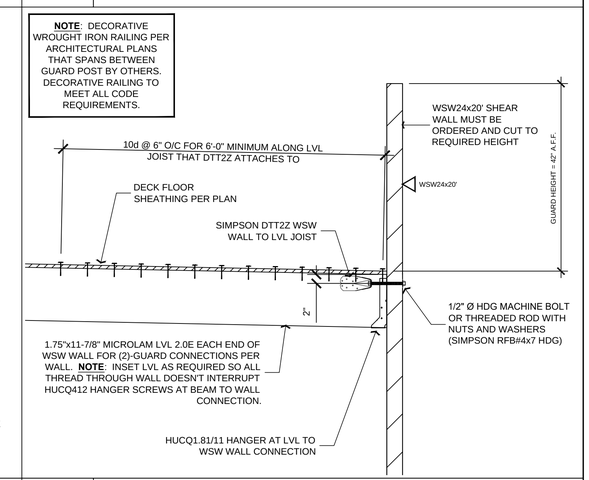

R3 GUARD CONNECTION

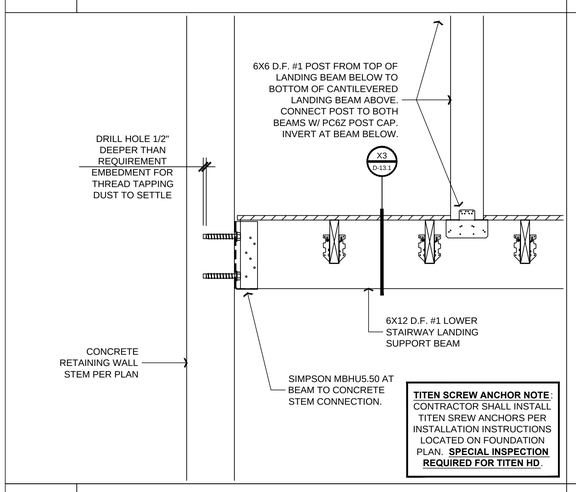

Y3 LANDING BEAM TO CONCRETE WALL

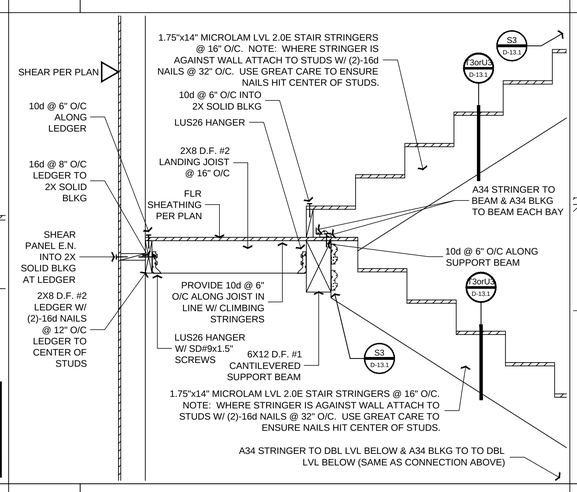

V3 UPPER STAIRWAY LANDING CONNECTION

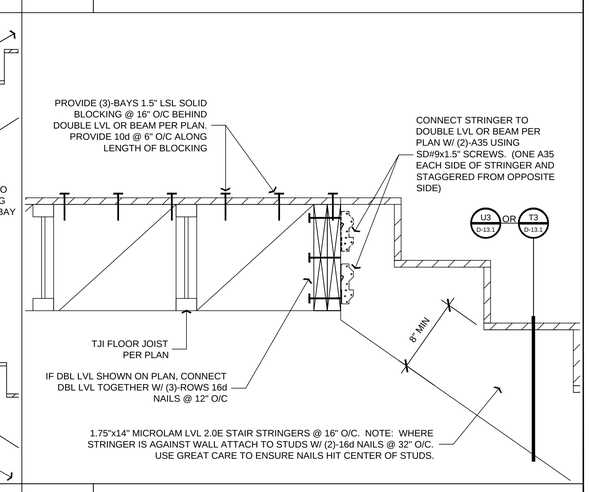

S3 STAIR STRINGER CONNECTION

ENGINEERING
239-4151
John A. Kudla
Civil Engineering &
Structural Design
R.C.E. #50652
610 10th ST. UNIT "A" PASO ROBLES, CA.

PLAN PREPARED FOR:

ERRON VELA
LOT 147 OF TRACT 1990 - TIMBERLINE DRIVE
PASO ROBLES, CA 93446

REVISION LOG

REV.	DESCRIPTION	DATE

These drawings are the exclusive property of J.K. Engineering and shall be used solely for the purpose of this project on this site. Any use other than the project upon which it is intended for without the written consent of J.K. Engineering and John Kudla is prohibited.

PROJECT NO. 18-0921-17
DRAWN BY DJK
DATE: 09/21/18
SHEET TITLE: VELA HOUSE STRUCTURAL.DWG

STRUCTURAL DETAILS

SHEET NUMBER:

D-13.1

REQ'D VERIFICATION & INSPECTION OF SOILS

SPECIAL INSPECTIONS SHOULD BE PERFORMED IN ACCORDANCE WITH TABLE 1705.6 BELOW:

VERIFICATION AND INSPECTION TASK	CONTINUOUS DURING TASK LISTED	PERIODICALLY DURING TASK LISTED
VERIFY MATERIAL BELOW FOOTINGS ARE ADEQUATE TO ACHIEVE THE DESIGN BEARING CAPACITY	NO	YES
VERIFY EXCAVATIONS ARE EXTENDED TO PROPER DEPTH AND HAVE REACHED PROPER MATERIAL	NO	YES
PERFORM CLASSIFICATION AND TESTING OF CONTROLLED FILLED MATERIALS	NO	YES
VERIFY USE OF PROPER MATERIALS DENSITIES AND LIFT THICKNESSES DURING PLACEMENT AND COMPACTION OF CONTROLLED FILL	YES	NO
PRIOR TO PLACEMENT OF CONTROLLED FILL, OBSERVE SUBGRADE AND VERIFY THAT THE SITE HAS BEEN PREPARED PROPERLY	NO	YES

DEEPENED FOOTING MAY BE REQ'D

CONTRACTOR SHALL NOTE THAT DEEPENED FOOTINGS MAY BE REQUIRED AS STATED IN THE GEOTECHNICAL REPORT. GEOTECHNICAL ENGINEER TO DETERMINE IF DEEPENED FOOTINGS ARE REQUIRED DURING FOOTING EXCAVATIONS. FOOTINGS AND / OR DEEPENED FOOTINGS SHALL EXTEND A MINIMUM OF (18)-INCHES INTO THE UNDERLYING MEDIUM DENSE TAN TO LIGHT BROWN MATERIALS, NOTED AS SOIL TYPES A2 AND A3 IN THE PROJECT BORING LOGS. CONTRACTOR SHALL SIMPLY THICKEN RETAINING WALL FOOTING / STEM AS REQUIRED TO MEET GEOTECHNICAL ENGINEER RECOMMENDATIONS. CONTRACTOR SHALL NOT BURY FOOTING / STEM DEEPER WHICH WOULD RESULT IN A TALLER STEM.

GENERAL SPECIFICATIONS FOR CONCRETE :

1. All concrete shall have 2500 psi minimum compressive strength at 28 days and shall be normal weight. (U.O.N.)
2. All concrete work shall comply with ACI building code (ACI 318)
3. The maximum concrete slump shall be : Slabs ..... 3" (plus or minus 1") All other work ... 4" (plus or minus 1")
4. The minimum cement content shall be 5 sacks per cubic yard and shall be Portland Cement, Type I or II, low alkali, per ASTM C-150.
5. Any water reducing agents added shall be used to reduce the water/cement ratio. Admixtures shall be approved by the Engineer.
6. Aggregate shall conform to ASTM C-33. Maximum aggregate size shall be 1" (U.O.N.) Use 3/4" aggregate for slabs on grade.
7. Concrete Placement :
   A. Concrete shall not free-fall more than five (5) feet. Use tremie pump or other approved methods.
   B. Vibrate all concrete (including slabs) as it is placed with a mechanical vibrator operated by experienced personnel. Reinforcing and forms shall not be vibrated.
8. Curing : Freshly deposited concrete shall be protected from premature drying and excessively hot or cold temperatures, and shall be maintained with minimal moisture loss at a relatively constant temperature for the period of time necessary for the hydration of the cement. (typically 7 days)
9. Unless specifically detailed or noted otherwise, construction and control joints shall be provided on all concrete slabs, and shall be located such that the area within joints does not exceed 400 square feet, and is roughly square without interior corners.

GENERAL SPEC'S FOR REINFORCING:

1. REINFORCING STEELS HALL BE CLEAN OF RUST, GREASE, OR OTHER MATERIAL LIKELY TO IMPAIR BOND.
2. ALL REINFORCEMENT STEEL SHALL BE CONTINUOUS AND LAPPED AT SPLICES (STAGGERED SPLICES AT ADJACENT BARS).
   #4 BAR LAP SPLICE = 24" MINIMUM
   #5 BAR LAP SPLICE = 42" MINIMUM
   REINFORCING BARS SHALL HAVE MINIMUM BEND RADIUS OF (4)-TIMES THE BAR DIAMETER (#4 = 2-INCH RADIUS / #5 = 2.5-INCH RADIUS).
   BARS SHALL NOT BE HEADED TO FACILITATE BENDING. ONCE BENT, STEELS HALL NOT BE STRAIGHTENED.
3. REINFORCING BARS ARE TO BE DEFORMED BARS CONFORMING TO ASTM A-615:
   #3 - #4 BARS = GRADE 40
   #5 BARS = GRADE 60
4. ALL REINFORCING STEEL, ANCHOR BOLTS, AND FOUNDATION HARDWARE SHALL BE LOCATED IN FORM WORK AND HELD FIRMLY IN PLACE PRIOR TO AND DURING CONCRETE PLACEMENT BY MEANS OF WIRE SUPPORTS.
5. CONCRETE CLEAR COVER IS REQUIRED AS FOLLOWS FOR REINFORCING:
   3-INCHES: WHERE CONCRETE IS EXPOSED TO AND CAST AGAINST EARTH
   2-INCHES: WHERE CONCRETE IS EXPOSED TO EARTH BUT CAST AGAINST FORM WORK
   1.5 INCHES: WHERE CONCRETE IS NOT EXPOSED TO EARTH OR WEATHER
6. REINFORCING STEEL SHALL NOT BE WELDED, UNLESS SPECIFICALLY NOTES ON THE STRUCTURAL DRAWINGS. IF ALLOWED, WELDING SHALL CONFORM TO CBC STANDARDS.

RETAINING WALL DESIGN VALUES

THE LISTED DESIGN VALUES BELOW FROM THE PROJECT SOILS REPORT WERE USED FOR THE STRUCTURAL DESIGN OF THE RETAINING WALLS FOR THIS PROJECT:

LATERAL PRESSURE	EQUIVALENT FLUID PRESSURE
ACTIVE CASE	40 pcf
ACTIVE CASE (40pcf + 14pcf (2:1 Surcharge)	54 pcf
SEISMIC LOAD = $16H^2$ plf @ 0.33H ft Above Base	See Walls 6ft & Higher
PASSIVE CASE	325 pcf
MAXIMUM TOE PRESSURE	1850 psf
COEFFICIENT OF SLIDING FRICTION	0.33

SOIL NOTE

SOILS EXPANSION INDEX: VERY LOW TO LOW
REPORT #: F-101663
BY: BEACON GEOTECHNICAL, INC.
DATED: SEPTEMBER 28, 2017

THE SOILS REPORT REFERENCED IS PART OF THESE PLANS AND ALL RECOMMENDATIONS THERE IN SHALL BE COMPLIED WITH.

RETAINING WALL NOTES PER SOILS REPORT

1. THE PRESSURES LISTED WERE BASED ON THE ASSUMPTION THAT BACKFILL SOILS WILL BE COMPACTED TO 90% OF MAXIMUM DRY DENSITY AS DETERMINED BY THE ASTM D 1557 TEST METHOD.
2. A BACK DRAIN OR AN EQUIVALENT SYSTEM OF BACKFILL DRAINAGE SHOULD BE INCORPORATED INTO THE RETAINING WALL DESIGN. BACKFILL IMMEDIATELY BEHIND THE RETAINING STRUCTURE SHOULD BE A FREE-DRAINING GRANULAR MATERIAL. ALTERNATIVELY, THE BACK OF THE WALL COULD BE LINED WITH A GEODRAIN SYSTEM.
3. COMPACTION ON THE UPHILL SIDE OF THE WALL WITHIN A HORIZONTAL DISTANCE EQUAL TO ONE WALL HEIGHT SHOULD BE PERFORMED BY HAND-OPERATED OR OTHER LIGHTWEIGHT COMPACTION EQUIPMENT. THIS IS INTENDED TO REDUCE POTENTIAL "LOCKED-IN" LATERAL PRESSURES CAUSED BY COMPACTION WITH HEAVY GRADING EQUIPMENT.
4. WATER SHOULD NOT BE ALLOWED TO POND NEAR THE TOP OF THE WALL. TO ACCOMPLISH THIS, THE FINAL BACKFILL SITE GRADE SHOULD BE SUCH THAT ALL WATER IS DIVERTED AWAY FROM THE RETAINING WALL.
5. TO REDUCE INFILTRATION OF THE SOIL INTO THE DRAIN GRAVEL, THE GRAVEL SHOULD BE ENCAPSULATED IN A PERMEABLE GEOTEXTILE FABRIC. A SUITABLE PERMEABLE GEOTEXTILE FABRIC, SUCH AS NON-WOVEN NEEDLE-PUNCHED MIRAFI 140N OR EQUAL, MAY BE UTILIZED AND SHOULD CONFORM TO CALTRANS STANDARD SPECIFICATION 88-1.03 FOR UNDERDRAINS.

NOTE: FOR ALL OTHER INFORMATION NOT STATED HERE THE OWNER / CONTRACTOR SHALL READ THE PROJECT SOILS REPORT PRIOR TO START OF CONSTRUCTION. ANY QUESTIONS REGARDING THE SOILS REPORT SHALL BE BROUGHT TO THE ATTENTION OF BEACON GEOTECHNICAL, INC.

CONSULTANTS

GEOTECHNICAL ENGINEER
BEACON GEOTECHNICAL, INC.
P.O. BOX 4814
PASO ROBLES, CA 93447
805.239.9457

STRUCTURAL DESIGN & CIVIL ENGINEERING
JK ENGINEERING
610 10TH ST, STE A
PASO ROBLES, CA 93446
805.239.4151

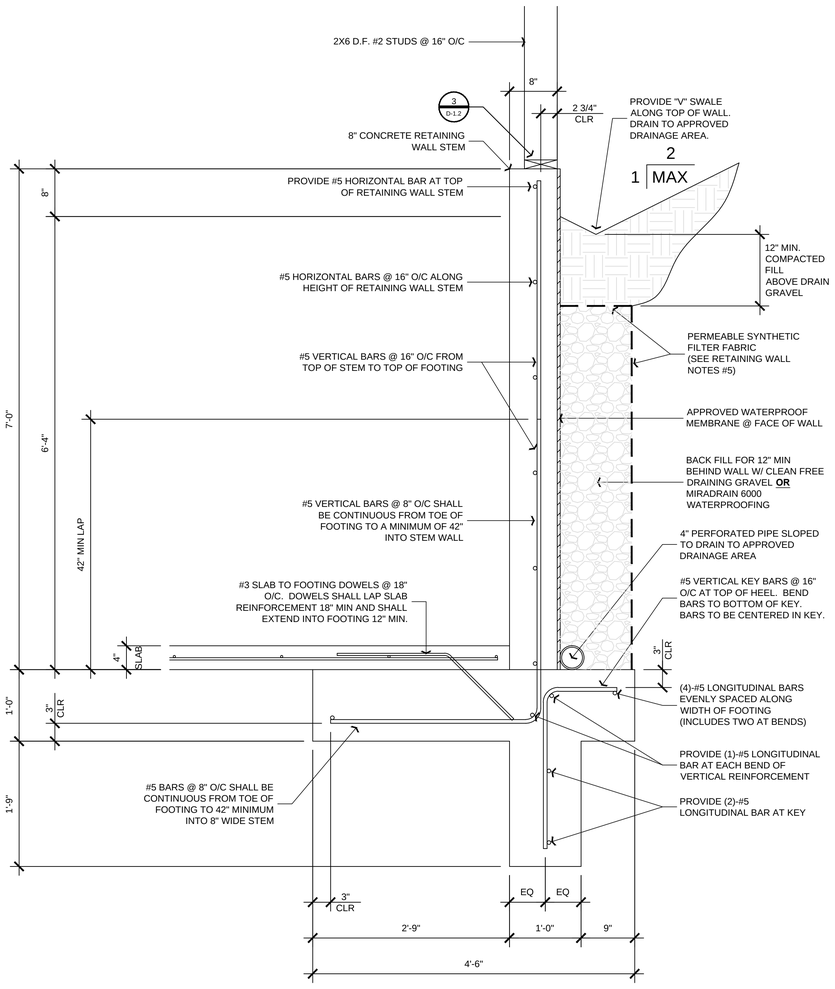

R6 6'-0" RETAINING WALL DETAIL

SCALE: 1" = 1'-0"

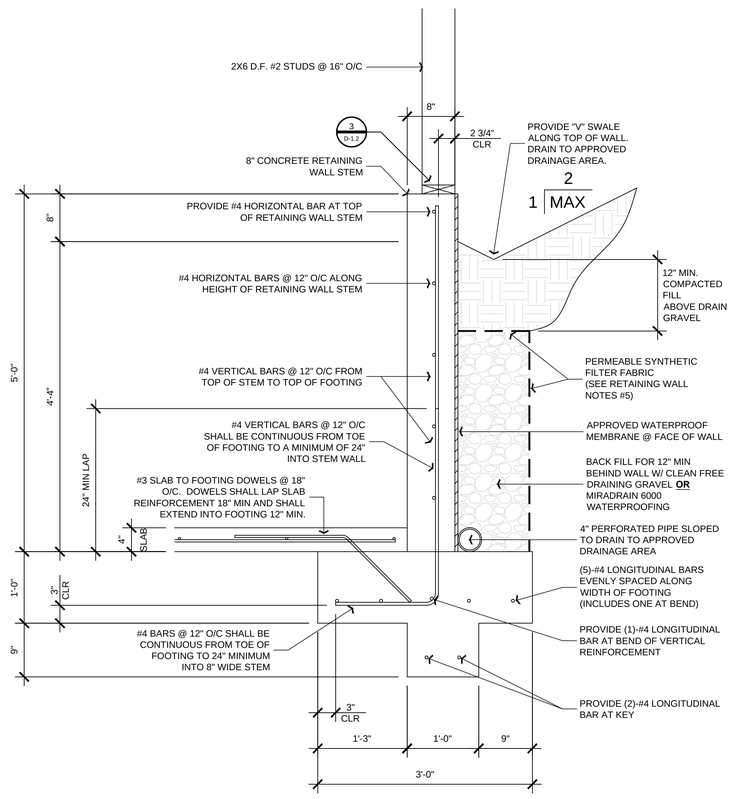

R4 4'-0" RETAINING WALL DETAIL

SCALE: 1" = 1'-0"

ENGINEERING
239-4151

John A. Kudla
Civil Engineering &
Structural Design
R.C.E. #50652
610 10th ST. UNIT 'A' PASO
ROBLES, CA.

PLAN PREPARED FOR:

ERRON VELA
LOT 147 OF TRACT 1990 - TIMBERLINE DRIVE
PASO ROBLES, CA 93446

REVISION LOG

REV.	DESCRIPTION	DATE

These drawings are the exclusive property of J.K. Engineering and shall be used solely for the purpose of this project on this site. Any use other than the project upon which it is intended for without the written consent of J.K. Engineering and John Kudla is prohibited.

PROJECT NO. 18-0921-17
DRAWN BY DJK
DATE: 09/21/18
SHEET TITLE: VELA HOUSE STRUCTURAL.DWG

SITE RETAINING WALL DESIGN

SHEET NUMBER:

R-1.1

RESTRAINT WALL NOTE

THE CONTRACTOR SHALL NOTE THAT RESTRAINT WALLS ARE DESIGNED TO BE BRACED AT THE TOP OF THE STEM BY THE CONCRETE SLAB. THEREFORE THE CONTRACTOR SHALL PROVIDE BRACING ALONG RESTRAINT WALL STEM UNTIL CONCRETE SLAB IS POURED AND CURED.

REQ'D VERIFICATION & INSPECTION OF SOILS

SPECIAL INSPECTIONS SHOULD BE PERFORMED IN ACCORDANCE WITH TABLE 1705.6 BELOW:

VERIFICATION AND INSPECTION TASK	CONTINUOUS DURING TASK LISTED	PERIODICALLY DURING TASK LISTED
VERIFY MATERIAL BELOW FOOTINGS ARE ADEQUATE TO ACHIEVE THE DESIGN BEARING CAPACITY	NO	YES
VERIFY EXCAVATIONS ARE EXTENDED TO PROPER DEPTH AND HAVE REACHED PROPER MATERIAL	NO	YES
PERFORM CLASSIFICATION AND TESTING OF CONTROLLED FILLED MATERIALS	NO	YES
VERIFY USE OF PROPER MATERIALS DENSITIES AND LIFT THICKNESSES DURING PLACEMENT AND COMPACTION OF CONTROLLED FILL	YES	NO
PRIOR TO PLACEMENT OF CONTROLLED FILL, OBSERVE SUBGRADE AND VERIFY THAT THE SITE HAS BEEN PREPARED PROPERLY	NO	YES

DEEPENED FOOTING MAY BE REQ'D

CONTRACTOR SHALL NOTE THAT DEEPENED FOOTINGS MAY BE REQUIRED AS STATED IN THE GEOTECHNICAL REPORT. GEOTECHNICAL ENGINEER TO DETERMINE IF DEEPENED FOOTINGS ARE REQUIRED DURING FOOTING EXCAVATIONS. FOOTINGS AND / OR DEEPENED FOOTINGS SHALL EXTEND A MINIMUM OF (18)-INCHES INTO THE UNDERLYING MEDIUM DENSE TAN TO LIGHT BROWN MATERIALS, NOTED AS SOIL TYPES A2 AND A3 IN THE PROJECT BORING LOGS. CONTRACTOR SHALL SIMPLY THICKEN RETAINING WALL FOOTING / STEM AS REQUIRED TO MEET GEOTECHNICAL ENGINEER RECOMMENDATIONS. CONTRACTOR SHALL NOT BURY FOOTING / STEM DEEPER WHICH WOULD RESULT IN A TALLER STEM.

GENERAL SPECIFICATIONS FOR CONCRETE :

1. All concrete shall have 2500 psi minimum compressive strength at 28 days and shall be normal weight. (U.O.N.)
2. All concrete work shall comply with ACI building code (ACI 318)
3. The maximum concrete slump shall be : Slabs ..... 3" (plus or minus 1") All other work ... 4" (plus or minus 1")
4. The minimum cement content shall be 5 sacks per cubic yard and shall be Portland Cement, Type I or II, low alkali, per ASTM C-150.
5. Any water reducing agents added shall be used to reduce the water/cement ratio. Admixtures shall be approved by the Engineer.
6. Aggregate shall conform to ASTM C-33. Maximum aggregate size shall be 1" (U.O.N.) Use 3/4" aggregate for slabs on grade.
7. Concrete Placement :
   A. Concrete shall not free-fall more than five (5) feet. Use tremie pump or other approved methods.
   B. Vibrate all concrete (including slabs) as it is placed with a mechanical vibrator operated by experienced personnel. Reinforcing and forms shall not be vibrated.
8. Curing : Freshly deposited concrete shall be protected from premature drying and excessively hot or cold temperatures, and shall be maintained with minimal moisture loss at a relatively constant temperature for the period of time necessary for the hydration of the cement. (typically 7 days)
9. Unless specifically detailed or noted otherwise, construction and control joints shall be provided on all concrete slabs, and shall be located such that the area within joints does not exceed 400 square feet, and is roughly square without interior corners.

GENERAL SPEC'S FOR REINFORCING:

1. REINFORCING STEELS HALL BE CLEAN OF RUST, GREASE, OR OTHER MATERIAL LIKELY TO IMPAIR BOND.
2. ALL REINFORCEMENT STEEL SHALL BE CONTINUOUS AND LAPPED AT SPLICES (STAGGERED SPLICES AT ADJACENT BARS).
   #4 BAR LAP SPLICE = 24" MINIMUM
   #5 BAR LAP SPLICE = 42" MINIMUM
   REINFORCING BARS SHALL HAVE MINIMUM BEND RADIUS OF (4)-TIMES THE BAR DIAMETER (#4 = 2-INCH RADIUS / #5 = 2.5-INCH RADIUS).
   BARS SHALL NOT BE HEADED TO FACILITATE BENDING. ONCE BENT, STEELS HALL NOT BE STRAIGHTENED.
3. REINFORCING BARS ARE TO BE DEFORMED BARS CONFORMING TO ASTM A-615:
   #3 - #4 BARS = GRADE 40
   #5 BARS = GRADE 60
4. ALL REINFORCING STEEL, ANCHOR BOLTS, AND FOUNDATION HARDWARE SHALL BE LOCATED IN FORM WORK AND HELD FIRMLY IN PLACE PRIOR TO AND DURING CONCRETE PLACEMENT BY MEANS OF WIRE SUPPORTS.
5. CONCRETE CLEAR COVER IS REQUIRED AS FOLLOWS FOR REINFORCING:
   3-INCHES: WHERE CONCRETE IS EXPOSED TO AND CAST AGAINST EARTH
   2-INCHES: WHERE CONCRETE IS EXPOSED TO EARTH BUT CAST AGAINST FORM WORK
   1.5 INCHES: WHERE CONCRETE IS NOT EXPOSED TO EARTH OR WEATHER
6. REINFORCING STEEL SHALL NOT BE WELDED, UNLESS SPECIFICALLY NOTES ON THE STRUCTURAL DRAWINGS. IF ALLOWED, WELDING SHALL CONFORM TO CBC STANDARDS.

RETAINING WALL DESIGN VALUES

THE LISTED DESIGN VALUES BELOW FROM THE PROJECT SOILS REPORT WERE USED FOR THE STRUCTURAL DESIGN OF THE RETAINING WALLS FOR THIS PROJECT:

LATERAL PRESSURE	EQUIVALENT FLUID PRESSURE
AT-REST CASE	60 pcf
4" CONCRETE SLAB SURCHAGE	50 psf
ASCE GARAGE LIVE LOAD	40 psf
PASSIVE CASE	325 pcf
MAXIMUM TOE PRESSURE	1850 psf
COEFFICIENT OF SLIDING FRICTION	0.33

SOIL NOTE

SOILS EXPANSION INDEX: VERY LOW TO LOW
REPORT #: F-101663
BY: BEACON GEOTECHNICAL, INC.
DATED: SEPTEMBER 28, 2017

THE SOILS REPORT REFERENCED IS PART OF THESE PLANS AND ALL RECOMMENDATIONS THERE IN SHALL BE COMPLIED WITH.

RETAINING WALL NOTES PER SOILS REPORT

1. THE PRESSURES LISTED WERE BASED ON THE ASSUMPTION THAT BACKFILL SOILS WILL BE COMPACTED TO 90% OF MAXIMUM DRY DENSITY AS DETERMINED BY THE ASTM D 1557 TEST METHOD.
2. A BACK DRAIN OR AN EQUIVALENT SYSTEM OF BACKFILL DRAINAGE SHOULD BE INCORPORATED INTO THE RETAINING WALL DESIGN. BACKFILL IMMEDIATELY BEHIND THE RETAINING STRUCTURE SHOULD BE A FREE-DRAINING GRANULAR MATERIAL. ALTERNATIVELY, THE BACK OF THE WALL COULD BE LINED WITH A GEODRAIN SYSTEM.
3. COMPACTION ON THE UPHILL SIDE OF THE WALL WITHIN A HORIZONTAL DISTANCE EQUAL TO ONE WALL HEIGHT SHOULD BE PERFORMED BY HAND-OPERATED OR OTHER LIGHTWEIGHT COMPACTION EQUIPMENT. THIS IS INTENDED TO REDUCE POTENTIAL "LOCKED-IN" LATERAL PRESSURES CAUSED BY COMPACTION WITH HEAVY GRADING EQUIPMENT.
4. WATER SHOULD NOT BE ALLOWED TO POND NEAR THE TOP OF THE WALL. TO ACCOMPLISH THIS, THE FINAL BACKFILL SITE GRADE SHOULD BE SUCH THAT ALL WATER IS DIVERTED AWAY FROM THE RETAINING WALL.
5. TO REDUCE INFILTRATION OF THE SOIL INTO THE DRAIN GRAVEL, THE GRAVEL SHOULD BE ENCAPSULATED IN A PERMEABLE GEOTEXTILE FABRIC. A SUITABLE PERMEABLE GEOTEXTILE FABRIC, SUCH AS NON-WOVEN NEEDLE-PUNCHED MIRAFI 140N OR EQUAL, MAY BE UTILIZED AND SHOULD CONFORM TO CALTRANS STANDARD SPECIFICATION 88-1.03 FOR UNDERDRAINS.

NOTE: FOR ALL OTHER INFORMATION NOT STATED HERE THE OWNER / CONTRACTOR SHALL READ THE PROJECT SOILS REPORT PRIOR TO START OF CONSTRUCTION. ANY QUESTIONS REGARDING THE SOILS REPORT SHALL BE BROUGHT TO THE ATTENTION OF BEACON GEOTECHNICAL, INC.

CONSULTANTS

GEOTECHNICAL ENGINEER
BEACON GEOTECHNICAL, INC.
P.O. BOX 4814
PASO ROBLES, CA 93447
805.239.9457

STRUCTURAL DESIGN & CIVIL ENGINEERING
JK ENGINEERING
610 10TH ST, STE A
PASO ROBLES, CA 93446
805.239.4151

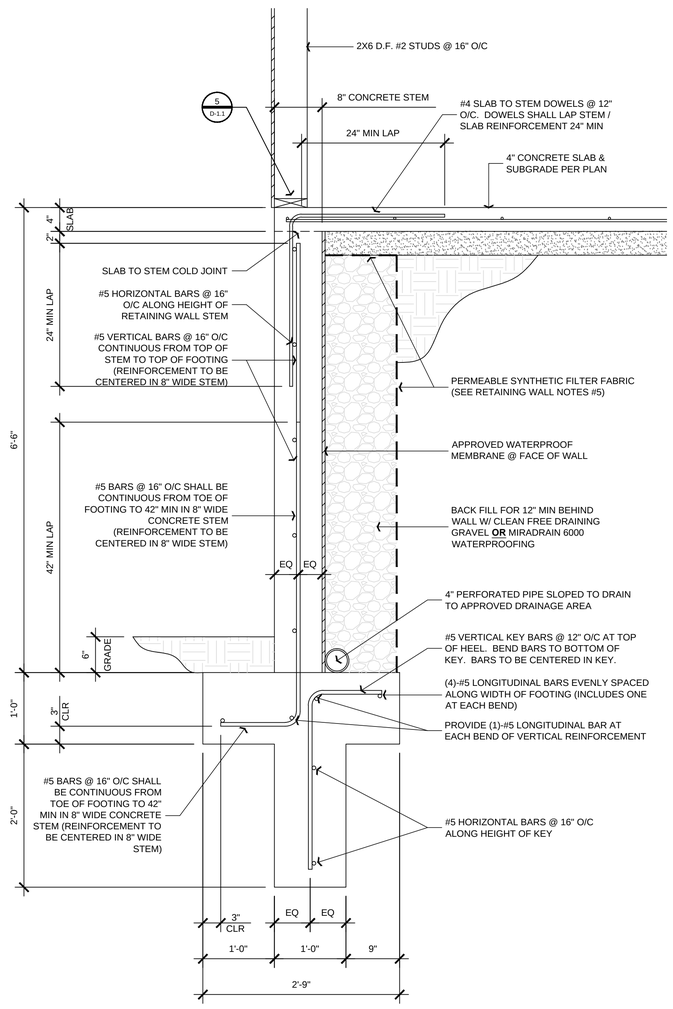

R6 6'-0" RESTRAINT WALL DETAIL

SCALE: 1" = 1'-0"

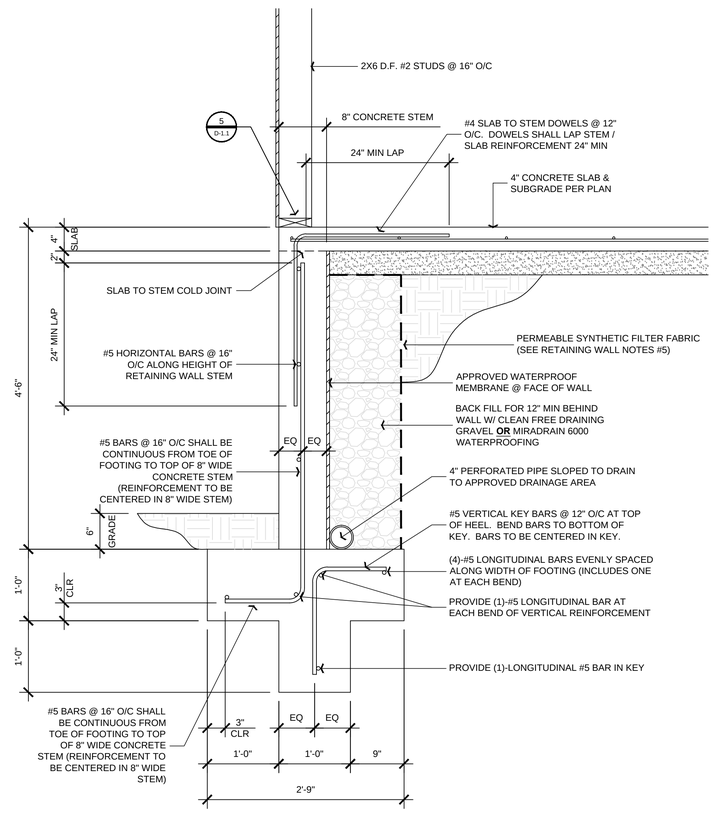

R4 4'-0" RESTRAINT WALL DETAIL

SCALE: 1" = 1'-0"

ENGINEERING
239-4151
John A. Kudla
Civil Engineering &
Structural Design
R.C.E. #50652
610 10th ST. UNIT 'A' PASO
ROBLES, CA.

PLAN PREPARED FOR:

ERRON VELA
LOT 147 OF TRACT 1990 - TIMBERLINE DRIVE
PASO ROBLES, CA 93446

REVISION LOG

REV.	DESCRIPTION	DATE

These drawings are the exclusive property of J.K. Engineering and shall be used solely for the purpose of this project on this site. Any use other than the project upon which it is intended for without the written consent of J.K. Engineering and John Kudla is prohibited.

PROJECT NO. 18-0921-17
DRAWN BY DJK
DATE: 09/21/18
SHEET TITLE: VELA GARAGE STRUCTURAL.DWG

GARAGE RESTRAINT WALLS

SHEET NUMBER:

R-2.1

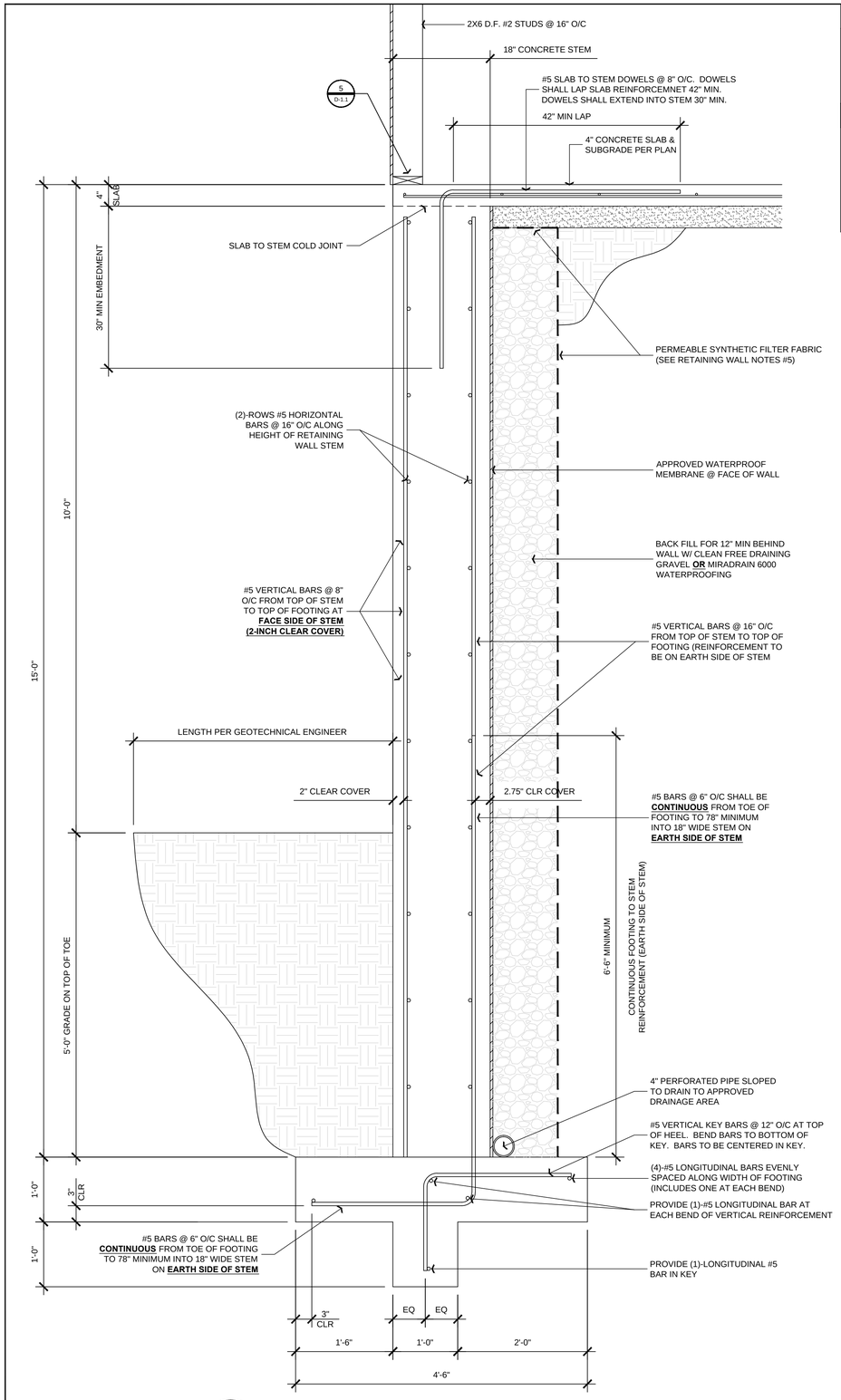

R10 10'-0" RESTRAINT WALL DETAIL

SCALE: 1" = 1'-0"

RESTRAINT WALL NOTE

THE CONTRACTOR SHALL NOTE THAT RESTRAINT WALLS ARE DESIGNED TO BE BRACED AT THE TOP OF THE STEM BY THE CONCRETE SLAB. THEREFORE THE CONTRACTOR SHALL PROVIDE BRACING ALONG RESTRAINT WALL STEM UNTIL CONCRETE SLAB IS POURED AND CURED.

DEEPENED FOOTING MAY BE REQ'D

CONTRACTOR SHALL NOTE THAT DEEPENED FOOTINGS MAY BE REQUIRED AS STATED IN THE GEOTECHNICAL REPORT. GEOTECHNICAL ENGINEER TO DETERMINE IF DEEPENED FOOTINGS ARE REQUIRED DURING FOOTING EXCAVATIONS. FOOTINGS AND / OR DEEPENED FOOTINGS SHALL EXTEND A MINIMUM OF (18)-INCHES INTO THE UNDERLYING MEDIUM DENSE TAN TO LIGHT BROWN MATERIALS, NOTED AS SOIL TYPES A2 AND A3 IN THE PROJECT BORING LOGS. CONTRACTOR SHALL SIMPLY THICKEN RETAINING WALL FOOTING / STEM AS REQUIRED TO MEET GEOTECHNICAL ENGINEER RECOMMENDATIONS. CONTRACTOR SHALL NOT BURY FOOTING / STEM DEEPER WHICH WOULD RESULT IN A TALLER STEM.

REQ'D VERIFICATION & INSPECTION OF SOILS

SPECIAL INSPECTIONS SHOULD BE PERFORMED IN ACCORDANCE WITH TABLE 1705.6 BELOW:

VERIFICATION AND INSPECTION TASK	CONTINUOUS DURING TASK LISTED	PERIODICALLY DURING TASK LISTED
VERIFY MATERIAL BELOW FOOTINGS ARE ADEQUATE TO ACHIEVE THE DESIGN BEARING CAPACITY	NO	YES
VERIFY EXCAVATIONS ARE EXTENDED TO PROPER DEPTH AND HAVE REACHED PROPER MATERIAL	NO	YES
PERFORM CLASSIFICATION AND TESTING OF CONTROLLED FILLED MATERIALS	NO	YES
VERIFY USE OF PROPER MATERIALS DENSITIES AND LIFT THICKNESSES DURING PLACEMENT AND COMPACTION OF CONTROLLED FILL	YES	NO
PRIOR TO PLACEMENT OF CONTROLLED FILL, OBSERVE SUBGRADE AND VERIFY THAT THE SITE HAS BEEN PREPARED PROPERLY	NO	YES

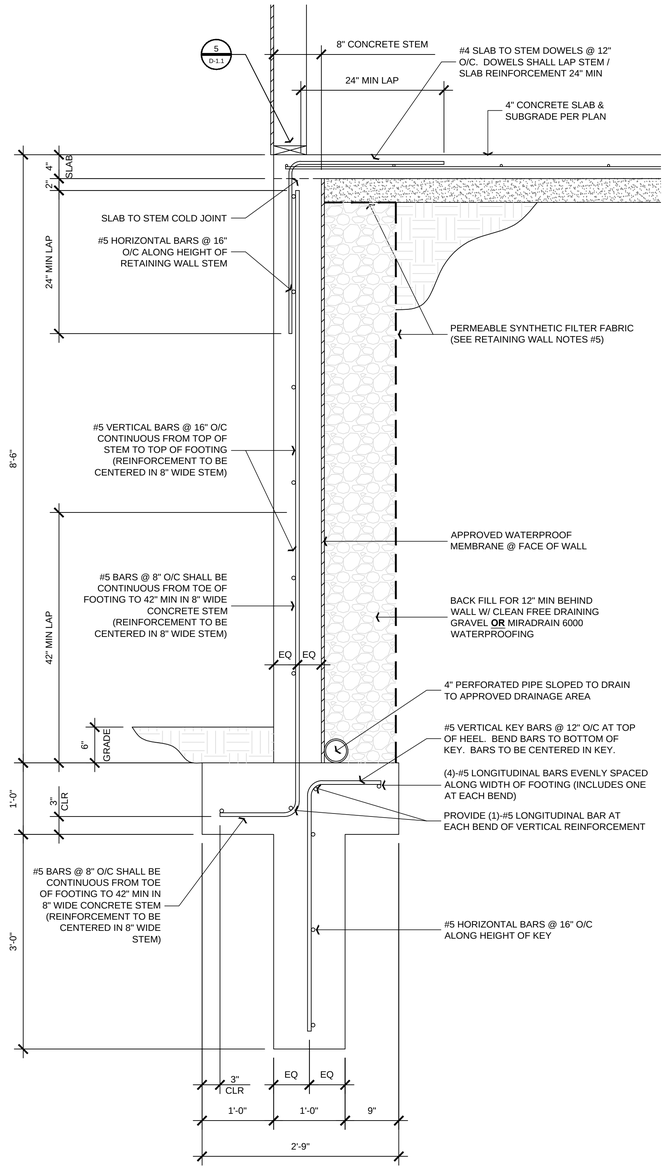

R8 8'-0" RESTRAINT WALL DETAIL

SCALE: 1" = 1'-0"

GENERAL SPECIFICATIONS FOR CONCRETE :

1. All concrete shall have 2500 psi minimum compressive strength at 28 days and shall be normal weight. (U.O.N.)
2. All concrete work shall comply with ACI building code (ACI 318)
3. The maximum concrete slump shall be : Slabs ..... 3" (plus or minus 1")
   All other work ... 4" (plus or minus 1")
4. The minimum cement content shall be 5 sacks per cubic yard and shall be Portland Cement, Type I or II, low alkali, per ASTM C-150.
5. Any water reducing agents added shall be used to reduce the water/cement ratio. Admixtures shall be approved by the Engineer.
6. Aggregate shall conform to ASTM C-33. Maximum aggregate size shall be 1" (U.O.N.) Use 3/4" aggregate for slabs on grade.
7. Concrete Placement :
   A. Concrete shall not free-fall more than five (5) feet. Use tremie pump or other approved methods.
   B. Vibrate all concrete (including slabs) as it is placed with a mechanical vibrator operated by experienced personnel. Reinforcing and forms shall not be vibrated.
8. Curing : Freshly deposited concrete shall be protected from premature drying and excessively hot or cold temperatures, and shall be maintained with minimal moisture loss at a relatively constant temperature for the period of time necessary for the hydration of the cement. (typically 7 days)
9. Unless specifically detailed or noted otherwise, construction and control joints shall be provided on all concrete slabs, and shall be located such that the area within joints does not exceed 400 square feet, and is roughly square without interior corners.

GENERAL SPEC'S FOR REINFORCING:

1. REINFORCING STEELS HALL BE CLEAN OF RUST, GREASE, OR OTHER MATERIAL LIKELY TO IMPAIR BOND.
2. ALL REINFORCEMENT STEEL SHALL BE CONTINUOUS AND LAPPED AT SPLICES (STAGGERED SPLICES AT ADJACENT BARS).
   #4 BAR LAP SPLICE = 24" MINIMUM
   #5 BAR LAP SPLICE = 42" MINIMUM
   REINFORCING BARS SHALL HAVE MINIMUM BEND RADIUS OF (4)-TIMES THE BAR DIAMETER (#4 = 2-INCH RADIUS / #5 = 2.5-INCH RADIUS).
   BARS SHALL NOT BE HEADED TO FACILITATE BENDING. ONCE BENT, STEELS HALL NOT BE STRAIGHTENED.
3. REINFORCING BARS ARE TO BE DEFORMED BARS CONFORMING TO ASTM A-615:
   #3 - #4 BARS = GRADE 40
   #5 BARS = GRADE 60
4. ALL REINFORCING STEEL, ANCHOR BOLTS, AND FOUNDATION HARDWARE SHALL BE LOCATED IN FORM WORK AND HELD FIRMLY IN PLACE PRIOR TO AND DURING CONCRETE PLACEMENT BY MEANS OF WIRE SUPPORTS.
5. CONCRETE CLEAR COVER IS REQUIRED AS FOLLOWS FOR REINFORCING:
   3-INCHES: WHERE CONCRETE IS EXPOSED TO AND CAST AGAINST EARTH
   2-INCHES: WHERE CONCRETE IS EXPOSED TO EARTH BUT CAST AGAINST FORM WORK
   1.5 INCHES: WHERE CONCRETE IS NOT EXPOSED TO EARTH OR WEATHER
6. REINFORCING STEEL SHALL NOT BE WELDED, UNLESS SPECIFICALLY NOTES ON THE STRUCTURAL DRAWINGS. IF ALLOWED, WELDING SHALL CONFORM TO CBC STANDARDS.

RETAINING WALL DESIGN VALUES

THE LISTED DESIGN VALUES BELOW FROM THE PROJECT SOILS REPORT WERE USED FOR THE STRUCTURAL DESIGN OF THE RETAINING WALLS FOR THIS PROJECT:

LATERAL PRESSURE	EQUIVALENT FLUID PRESSURE
AT-REST CASE	60 pcf
4" CONCRETE SLAB SURCHAGE	50 psf
ASCE GARAGE LIVE LOAD	40 psf
PASSIVE CASE	325 pcf
MAXIMUM TOE PRESSURE	1850 psf
COEFFICIENT OF SLIDING FRICTION	0.33

SOIL NOTE

SOILS EXPANSION INDEX: VERY LOW TO LOW
REPORT #: F-101663
BY: BEACON GEOTECHNICAL, INC.
DATED: SEPTEMBER 28, 2017

THE SOILS REPORT REFERENCED IS PART OF THESE PLANS AND ALL RECOMMENDATIONS THERE IN SHALL BE COMPLIED WITH.

RETAINING WALL NOTES PER SOILS REPORT

1. THE PRESSURES LISTED WERE BASED ON THE ASSUMPTION THAT BACKFILL SOILS WILL BE COMPACTED TO 90% OF MAXIMUM DRY DENSITY AS DETERMINED BY THE ASTM D 1557 TEST METHOD.
2. A BACK DRAIN OR AN EQUIVALENT SYSTEM OF BACKFILL DRAINAGE SHOULD BE INCORPORATED INTO THE RETAINING WALL DESIGN. BACKFILL IMMEDIATELY BEHIND THE RETAINING STRUCTURE SHOULD BE A FREE-DRAINING GRANULAR MATERIAL. ALTERNATIVELY, THE BACK OF THE WALL COULD BE LINED WITH A GEODRAIN SYSTEM.
3. COMPACTION ON THE UPHILL SIDE OF THE WALL WITHIN A HORIZONTAL DISTANCE EQUAL TO ONE WALL HEIGHT SHOULD BE PERFORMED BY HAND-OPERATED OR OTHER LIGHTWEIGHT COMPACTION EQUIPMENT. THIS IS INTENDED TO REDUCE POTENTIAL "LOCKED-IN" LATERAL PRESSURES CAUSED BY COMPACTION WITH HEAVY GRADING EQUIPMENT.
4. WATER SHOULD NOT BE ALLOWED TO POND NEAR THE TOP OF THE WALL. TO ACCOMPLISH THIS, THE FINAL BACKFILL SITE GRADE SHOULD BE SUCH THAT ALL WATER IS DIVERTED AWAY FROM THE RETAINING WALL.
5. TO REDUCE INFILTRATION OF THE SOIL INTO THE DRAIN GRAVEL, THE GRAVEL SHOULD BE ENCAPSULATED IN A PERMEABLE GEOTEXTILE FABRIC. A SUITABLE PERMEABLE GEOTEXTILE FABRIC, SUCH AS NON-WOVEN NEEDLE-PUNCHED MIRAFI 140N OR EQUAL, MAY BE UTILIZED AND SHOULD CONFORM TO CALTRANS STANDARD SPECIFICATION 88-1.03 FOR UNDERDRAINS.

NOTE: FOR ALL OTHER INFORMATION NOT STATED HERE THE OWNER / CONTRACTOR SHALL READ THE PROJECT SOILS REPORT PRIOR TO START OF CONSTRUCTION. ANY QUESTIONS REGARDING THE SOILS REPORT SHALL BE BROUGHT TO THE ATTENTION OF BEACON GEOTECHNICAL, INC.

CONSULTANTS

GEOTECHNICAL ENGINEER
BEACON GEOTECHNICAL, INC.
P.O. BOX 4814
PASO ROBLES, CA 93447
805.239.9457

STRUCTURAL DESIGN & CIVIL ENGINEERING
JK ENGINEERING
610 10TH ST, STE A
PASO ROBLES, CA 93446
805.239.4151

ENGINEERING
239-4151
John A. Kudla
Civil Engineering &
Structural Design
R.C.E. #50652
610 10th ST. UNIT "A" PASO
ROBLES, CA.

PLAN PREPARED FOR:

ERRON VELA
LOT 147 OF TRACT 1990 - TIMBERLINE DRIVE
PASO ROBLES, CA 93446

REVISION LOG

REV.	DESCRIPTION	DATE

These drawings are the exclusive property of J.K. Engineering and shall be used solely for the purpose of this project on this site. Any use other than the project upon which it is intended for without the written consent of J.K. Engineering and John Kudla is prohibited.

PROJECT NO. 18-0921-17
DRAWN BY DJK
DATE: 09/21/18
SHEET TITLE: VELA GARAGE STRUCTURAL.DWG

GARAGE RESTRAINT WALLS

SHEET NUMBER:

R-3.1

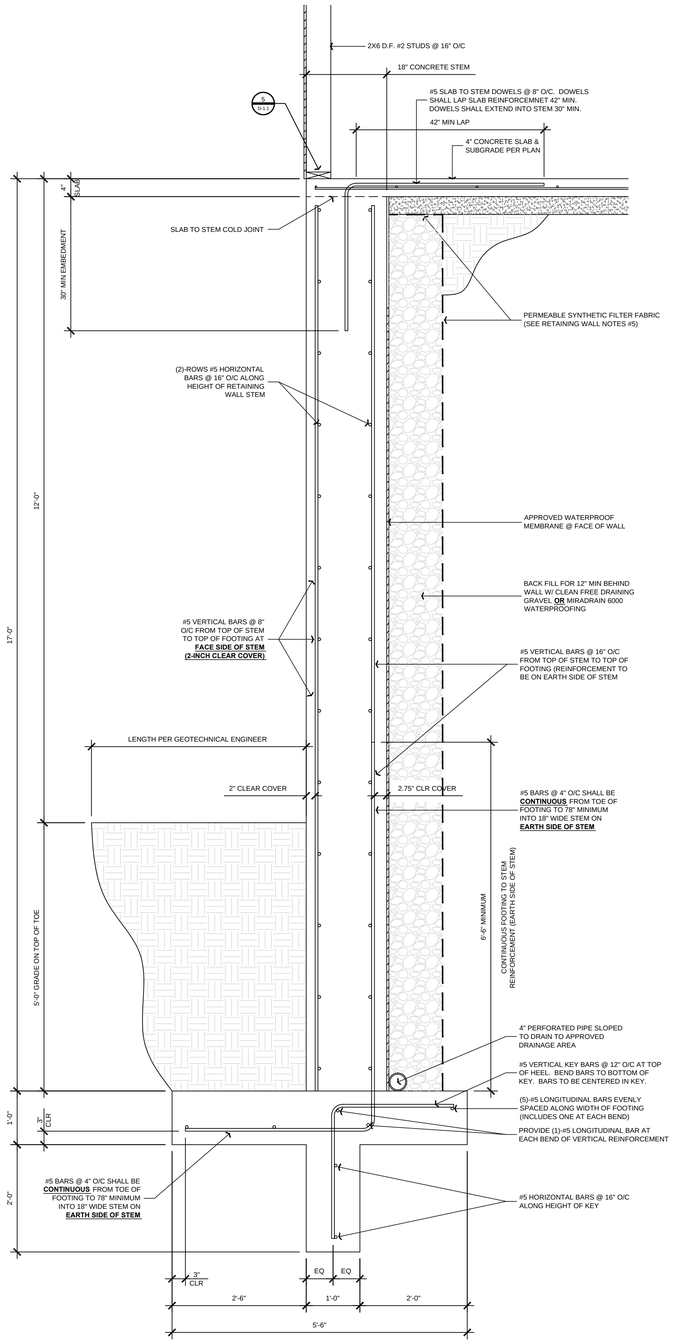

R12 12'-0" RESTRAINT WALL DETAIL

SCALE: 1" = 1'-0"

REQ'D VERIFICATION & INSPECTION OF SOILS

SPECIAL INSPECTIONS SHOULD BE PERFORMED IN ACCORDANCE WITH TABLE 1705.6 BELOW:

VERIFICATION AND INSPECTION TASK	CONTINUOUS DURING TASK LISTED	PERIODICALLY DURING TASK LISTED
VERIFY MATERIAL BELOW FOOTINGS ARE ADEQUATE TO ACHIEVE THE DESIGN BEARING CAPACITY	NO	YES
VERIFY EXCAVATIONS ARE EXTENDED TO PROPER DEPTH AND HAVE REACHED PROPER MATERIAL	NO	YES
PERFORM CLASSIFICATION AND TESTING OF CONTROLLED FILLED MATERIALS	NO	YES
VERIFY USE OF PROPER MATERIALS DENSITIES AND LIFT THICKNESSES DURING PLACEMENT AND COMPACTION OF CONTROLLED FILL	YES	NO
PRIOR TO PLACEMENT OF CONTROLLED FILL, OBSERVE SUBGRADE AND VERIFY THAT THE SITE HAS BEEN PREPARED PROPERLY	NO	YES

RESTRAINT WALL NOTE

THE CONTRACTOR SHALL NOTE THAT RESTRAINT WALLS ARE DESIGNED TO BE BRACED AT THE TOP OF THE STEM BY THE CONCRETE SLAB. THEREFORE THE CONTRACTOR SHALL PROVIDE BRACING ALONG RESTRAINT WALL STEM UNTIL CONCRETE SLAB IS POURED AND CURED.

DEEPENED FOOTING MAY BE REQ'D

CONTRACTOR SHALL NOTE THAT DEEPENED FOOTINGS MAY BE REQUIRED AS STATED IN THE GEOTECHNICAL REPORT. GEOTECHNICAL ENGINEER TO DETERMINE IF DEEPENED FOOTINGS ARE REQUIRED DURING FOOTING EXCAVATIONS. FOOTINGS AND / OR DEEPENED FOOTINGS SHALL EXTEND A MINIMUM OF (18)-INCHES INTO THE UNDERLYING MEDIUM DENSE TAN TO LIGHT BROWN MATERIALS, NOTED AS SOIL TYPES A2 AND A3 IN THE PROJECT BORING LOGS. CONTRACTOR SHALL SIMPLY THICKEN RETAINING WALL FOOTING / STEM AS REQUIRED TO MEET GEOTECHNICAL ENGINEER RECOMMENDATIONS. CONTRACTOR SHALL NOT BURY FOOTING / STEM DEEPER WHICH WOULD RESULT IN A TALLER STEM.

GENERAL SPECIFICATIONS FOR CONCRETE :

1. All concrete shall have 2500 psi minimum compressive strength at 28 days and shall be normal weight. (U.O.N.)
2. All concrete work shall comply with ACI building code (ACI 318)
3. The maximum concrete slump shall be : Slabs ..... 3" (plus or minus 1") All other work ... 4" (plus or minus 1")
4. The minimum cement content shall be 5 sacks per cubic yard and shall be Portland Cement, Type I or II, low alkali, per ASTM C-150.
5. Any water reducing agents added shall be used to reduce the water/cement ratio. Admixtures shall be approved by the Engineer.
6. Aggregate shall conform to ASTM C-33. Maximum aggregate size shall be 1" (U.O.N.) Use 3/4" aggregate for slabs on grade.
7. Concrete Placement :
   A. Concrete shall not free-fall more than five (5) feet. Use tremie pump or other approved methods.
   B. Vibrate all concrete (including slabs) as it is placed with a mechanical vibrator operated by experienced personnel. Reinforcing and forms shall not be vibrated.
8. Curing : Freshly deposited concrete shall be protected from premature drying and excessively hot or cold temperatures, and shall be maintained with minimal moisture loss at a relatively constant temperature for the period of time necessary for the hydration of the cement. (typically 7 days)
9. Unless specifically detailed or noted otherwise, construction and control joints shall be provided on all concrete slabs, and shall be located such that the area within joints does not exceed 400 square feet, and is roughly square without interior corners.

GENERAL SPEC'S FOR REINFORCING:

1. REINFORCING STEELS HALL BE CLEAN OF RUST, GREASE, OR OTHER MATERIAL LIKELY TO IMPAIR BOND.
2. ALL REINFORCEMENT STEEL SHALL BE CONTINUOUS AND LAPPED AT SPLICES (STAGGERED SPLICES AT ADJACENT BARS).
   #4 BAR LAP SPLICE = 24" MINIMUM
   #5 BAR LAP SPLICE = 42" MINIMUM
   REINFORCING BARS SHALL HAVE MINIMUM BEND RADIUS OF (4)-TIMES THE BAR DIAMETER (#4 = 2-INCH RADIUS / #5 = 2.5-INCH RADIUS).
   BARS SHALL NOT BE HEADED TO FACILITATE BENDING. ONCE BENT, STEELS HALL NOT BE STRAIGHTENED.
3. REINFORCING BARS ARE TO BE DEFORMED BARS CONFORMING TO ASTM A-615:
   #3 - #4 BARS = GRADE 40
   #5 BARS = GRADE 60
4. ALL REINFORCING STEEL, ANCHOR BOLTS, AND FOUNDATION HARDWARE SHALL BE LOCATED IN FORM WORK AND HELD FIRMLY IN PLACE PRIOR TO AND DURING CONCRETE PLACEMENT BY MEANS OF WIRE SUPPORTS.
5. CONCRETE CLEAR COVER IS REQUIRED AS FOLLOWS FOR REINFORCING:
   3-INCHES: WHERE CONCRETE IS EXPOSED TO AND CAST AGAINST EARTH
   2-INCHES: WHERE CONCRETE IS EXPOSED TO EARTH BUT CAST AGAINST FORM WORK
   1.5 INCHES: WHERE CONCRETE IS NOT EXPOSED TO EARTH OR WEATHER
6. REINFORCING STEEL SHALL NOT BE WELDED, UNLESS SPECIFICALLY NOTES ON THE STRUCTURAL DRAWINGS. IF ALLOWED, WELDING SHALL CONFORM TO CBC STANDARDS.

RETAINING WALL DESIGN VALUES

THE LISTED DESIGN VALUES BELOW FROM THE PROJECT SOILS REPORT WERE USED FOR THE STRUCTURAL DESIGN OF THE RETAINING WALLS FOR THIS PROJECT:

LATERAL PRESSURE	EQUIVALENT FLUID PRESSURE
AT-REST CASE	60 pcf
4" CONCRETE SLAB SURCHAGE	50 psf
ASCE GARAGE LIVE LOAD	40 psf
PASSIVE CASE	325 pcf
MAXIMUM TOE PRESSURE	1850 psf
COEFFICIENT OF SLIDING FRICTION	0.33

SOIL NOTE

SOILS EXPANSION INDEX: VERY LOW TO LOW
REPORT #: F-101663
BY: BEACON GEOTECHNICAL, INC.
DATED: SEPTEMBER 28, 2017

THE SOILS REPORT REFERENCED IS PART OF THESE PLANS AND ALL RECOMMENDATIONS THERE IN SHALL BE COMPLIED WITH.

RETAINING WALL NOTES PER SOILS REPORT

1. THE PRESSURES LISTED WERE BASED ON THE ASSUMPTION THAT BACKFILL SOILS WILL BE COMPACTED TO 90% OF MAXIMUM DRY DENSITY AS DETERMINED BY THE ASTM D 1557 TEST METHOD.
2. A BACK DRAIN OR AN EQUIVALENT SYSTEM OF BACKFILL DRAINAGE SHOULD BE INCORPORATED INTO THE RETAINING WALL DESIGN. BACKFILL IMMEDIATELY BEHIND THE RETAINING STRUCTURE SHOULD BE A FREE-DRAINING GRANULAR MATERIAL. ALTERNATIVELY, THE BACK OF THE WALL COULD BE LINED WITH A GEODRAIN SYSTEM.
3. COMPACTION ON THE UPHILL SIDE OF THE WALL WITHIN A HORIZONTAL DISTANCE EQUAL TO ONE WALL HEIGHT SHOULD BE PERFORMED BY HAND-OPERATED OR OTHER LIGHTWEIGHT COMPACTION EQUIPMENT. THIS IS INTENDED TO REDUCE POTENTIAL "LOCKED-IN" LATERAL PRESSURES CAUSED BY COMPACTION WITH HEAVY GRADING EQUIPMENT.
4. WATER SHOULD NOT BE ALLOWED TO POND NEAR THE TOP OF THE WALL. TO ACCOMPLISH THIS, THE FINAL BACKFILL SITE GRADE SHOULD BE SUCH THAT ALL WATER IS DIVERTED AWAY FROM THE RETAINING WALL.
5. TO REDUCE INFILTRATION OF THE SOIL INTO THE DRAIN GRAVEL, THE GRAVEL SHOULD BE ENCAPSULATED IN A PERMEABLE GEOTEXTILE FABRIC. A SUITABLE PERMEABLE GEOTEXTILE FABRIC, SUCH AS NON-WOVEN NEEDLE-PUNCHED MIRAFI 140N OR EQUAL, MAY BE UTILIZED AND SHOULD CONFORM TO CALTRANS STANDARD SPECIFICATION 88-1.03 FOR UNDERDRAINS.

NOTE: FOR ALL OTHER INFORMATION NOT STATED HERE THE OWNER / CONTRACTOR SHALL READ THE PROJECT SOILS REPORT PRIOR TO START OF CONSTRUCTION. ANY QUESTIONS REGARDING THE SOILS REPORT SHALL BE BROUGHT TO THE ATTENTION OF BEACON GEOTECHNICAL, INC.

CONSULTANTS

GEOTECHNICAL ENGINEER
BEACON GEOTECHNICAL, INC.
P.O. BOX 4814
PASO ROBLES, CA 93447
805.239.9457

STRUCTURAL DESIGN & CIVIL ENGINEERING
JK ENGINEERING
610 10TH ST, STE A
PASO ROBLES, CA 93446
805.239.4151

ENGINEERING
239-4151
John A. Kudla
Civil Engineering &
Structural Design
R.C.E. #50652
610 10th ST. UNIT "A' PASO
ROBLES, CA.

PLAN PREPARED FOR:

ERRON VELA
LOT 147 OF TRACT 1990 - TIMBERLINE DRIVE
PASO ROBLES, CA 93446

REVISION LOG

REV.	DESCRIPTION	DATE

These drawings are the exclusive property of J.K. Engineering and shall be used solely for the purpose of this project on this site. Any use other than the project upon which it is intended for without the written consent of J.K. Engineering and John Kudla is prohibited.

PROJECT NO. 18-0921-17
DRAWN BY DJK
DATE: 09/21/18
SHEET TITLE: VELA GARAGE STRUCTURAL.DWG

GARAGE RESTRAINT WALLS

SHEET NUMBER:

R-4.1

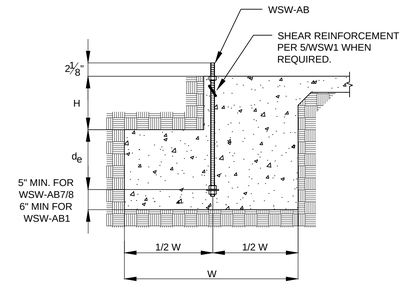

SLAB ON GRADE FOUNDATION

NOTES:
1. SEE 2/WSW1 FOR DIMENSIONS AND ADDITIONAL NOTES.
2. SEE 5/WSW1 FOR SHEAR REINFORCEMENT WHEN REQUIRED.
3. MAXIMUM H = l_e - d_e. SEE 3/WSW1 AND 4/WSW1 FOR l_e.

REGISTERED DESIGN PROFESSIONAL IS PERMITTED TO MODIFY DETAILS FOR SPECIFIC CONDITIONS.

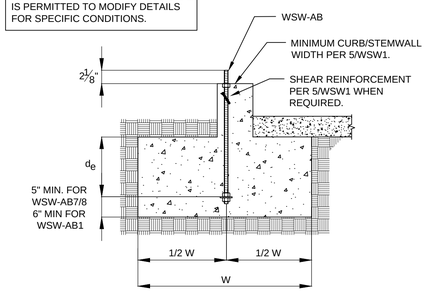

CURB OR STEMWALL FOUNDATION

STRONG-WALL® WSW ANCHORAGE - TYPICAL SECTIONS | 1

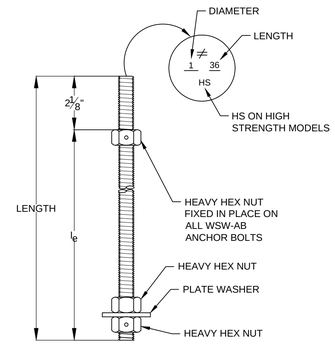

WSW PANEL MODEL	MODEL NO.	DIAMETER	LENGTH	l_e
WSW12 AND WSW18	WSW-AB7/8x24	7/8"	24"	20"
	WSW-AB7/8x24HS	7/8"	24"	20"
	WSW-AB7/8x30	7/8"	30"	26"
	WSW-AB7/8x30HS	7/8"	30"	26"
	WSW-AB7/8x36HS	7/8"	36"	32"
WSW24	WSW-AB1x24	1"	24"	20"
	WSW-AB1x24HS	1"	24"	20"
	WSW-AB1x30	1"	30"	26"
	WSW-AB1x30HS	1"	30"	26"
	WSW-AB1x36HS	1"	36"	32"

WSW ANCHOR BOLTS | 3

WSW-HSR_KT

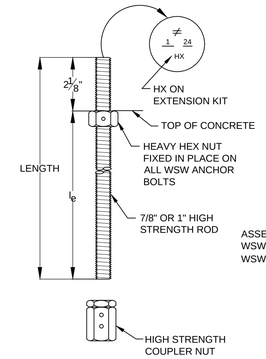

WSW-HSR AND WSW-AB ASSEMBLY

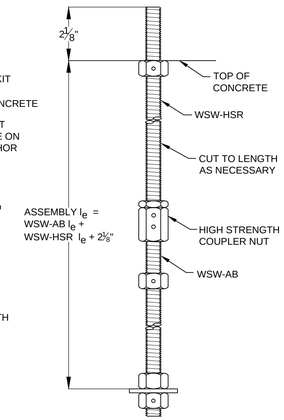

WSW PANEL MODEL	MODEL NO.	DIAMETER	LENGTH	l_e
WSW12 AND WSW18	WSW-HSR7/8x24KT	7/8"	24"	22"
	WSW-HSR7/8x36KT	7/8"	36"	34"
WSW24	WSW-HSR1x24KT	1"	24"	22"
	WSW-HSR1x36KT	1"	36"	34"

WSW ANCHOR BOLT EXTENSION | 4

WSW-RT INTERIOR INSTALLATION

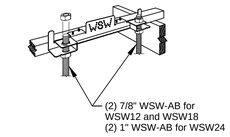

WSW-RT EXTERIOR INSTALLATION

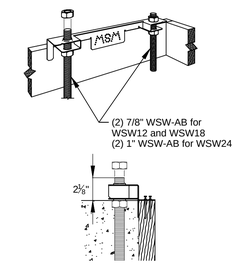

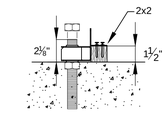

WSW-RTPF PANEL FORM INSTALLATION

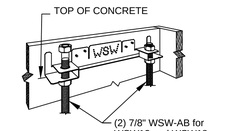

WSW-RTBL BRICK LEDGE INSTALLATION

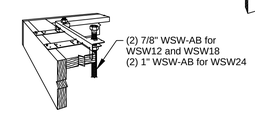

WSW ANCHOR BOLT TEMPLATES | 6

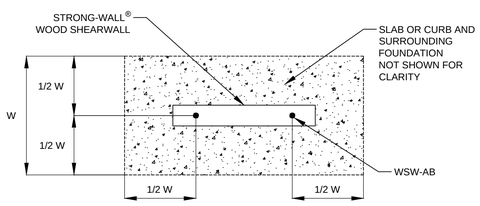

FOUNDATION PLAN VIEW

WSW ANCHORAGE SOLUTIONS FOR 2500 PSI CONCRETE

DESIGN CRITERIA	CONCRETE CONDITION	ANCHOR STRENGTH	WSW-AB7/8 ANCHOR BOLT: ASD ALLOWABLE TENSION (lb.)	W (in.)	d_e (in.)	WSW-AB1 ANCHOR BOLT: ASD ALLOWABLE TENSION (lb.)	W (in.)	d_e (in.)
SEISMIC	CRACKED	STANDARD	11,900	27	9	16,100	33	11
			13,100	29	10	17,100	35	12
		HIGH STRENGTH	24,900	43	15	33,000	51	17
			27,100	46	16	35,300	54	18
	UNCRACKED	STANDARD	12,500	24	8	15,700	28	10
			13,100	25	9	17,100	30	10
		HIGH STRENGTH	25,300	38	13	32,300	44	15
			27,100	40	14	35,300	47	16
WIND	CRACKED	STANDARD	5,100	14	6	6,200	16	6
			8,700	20	7	11,400	24	8
			13,100	27	9	17,100	32	11
		HIGH STRENGTH	15,900	30	10	21,100	36	12
			18,400	33	11	27,300	42	14
			23,100	38	13	31,800	46	16
			27,100	42	14	35,300	50	17
	UNCRACKED	STANDARD	5,000	12	6	6,400	14	6
			9,300	18	6	12,500	22	8
			13,100	23	8	17,100	28	10
		HIGH STRENGTH	15,200	25	9	21,900	32	11
			19,900	30	10	26,400	36	12
			24,000	34	12	31,500	40	14
			27,100	37	13	35,300	43	15

NOTES:
1. ANCHORAGE DESIGNS CONFORM TO ACI 318-11 APPENDIX D AND ACI 318-14 WITH NO SUPPLEMENTARY REINFORCEMENT FOR CRACKED OR UNCRACKED CONCRETE AS NOTED.
2. ANCHOR STRENGTH INDICATES REQUIRED GRADE OF WSW-AB ANCHOR BOLT. STANDARD (ASTM F1554 GRADE 36) OR HIGH STRENGTH (HS) (ASTM A449).
3. SEISMIC INDICATES SEISMIC DESIGN CATEGORY C - F. DETACHED 1 AND 2 FAMILY DWELLINGS IN SDC C MAY USE WIND ANCHORAGE SOLUTIONS. SEISMIC ANCHORAGE DESIGNS CONFORM TO ACI 318-11 SECTION D.3.3.4.3 AND ACI 318-14 SECTION 17.2.3.4.3.
4. WIND INCLUDES SEISMIC DESIGN CATEGORY A AND B AND DETACHED 1 AND 2 FAMILY DWELLINGS IN SDC C.
5. FOUNDATION DIMENSIONS ARE FOR ANCHORAGE ONLY. FOUNDATION DESIGN (SIZE AND REINFORCEMENT) BY OTHERS. THE REGISTERED DESIGN PROFESSIONAL MAY SPECIFY ALTERNATE EMBEDMENT, FOOTING SIZE OR ANCHOR BOLT.
6. REFER TO 1/WSW1 FOR d_e.

STRONG-WALL® WOOD SHEARWALL TENSION ANCHORAGE SCHEDULE 2,500, 3,000 AND 4,500 PSI | 2

WSW ANCHORAGE SOLUTIONS FOR 3000 PSI CONCRETE

DESIGN CRITERIA	CONCRETE CONDITION	ANCHOR STRENGTH	WSW-AB7/8 ANCHOR BOLT: ASD ALLOWABLE TENSION (lb.)	W (in.)	d_e (in.)	WSW-AB1 ANCHOR BOLT: ASD ALLOWABLE TENSION (lb.)	W (in.)	d_e (in.)
SEISMIC	CRACKED	STANDARD	12,300	26	9	16,000	31	11
			13,100	28	10	17,100	33	11
		HIGH STRENGTH	25,200	41	14	32,700	48	16
			27,100	43	15	35,300	51	17
	UNCRACKED	STANDARD	12,000	22	8	16,300	27	9
			13,100	24	8	17,100	28	10
		HIGH STRENGTH	25,300	36	12	32,700	42	14
			27,100	38	13	35,300	44	15
WIND	CRACKED	STANDARD	5,000	13	6	5,600	14	6
			8,800	19	7	10,200	21	7
			13,100	25	9	17,100	30	10
		HIGH STRENGTH	15,700	28	10	20,100	33	11
			19,200	32	11	25,300	38	13
			23,200	36	12	32,300	44	15
			27,100	40	14	35,300	47	16
	UNCRACKED	STANDARD	5,500	12	6	6,200	13	6
			8,500	16	6	12,800	21	7
			13,100	22	8	17,100	26	9
		HIGH STRENGTH	16,600	25	9	21,800	30	10
			19,700	28	10	25,200	33	11
			24,000	32	11	31,700	38	13
			27,100	35	12	35,300	41	14

WSW ANCHORAGE SOLUTIONS FOR 4500 PSI CONCRETE

DESIGN CRITERIA	CONCRETE CONDITION	ANCHOR STRENGTH	WSW-AB7/8 ANCHOR BOLT: ASD ALLOWABLE TENSION (lb.)	W (in.)	d_e (in.)	WSW-AB1 ANCHOR BOLT: ASD ALLOWABLE TENSION (lb.)	W (in.)	d_e (in.)
SEISMIC	CRACKED	STANDARD	12,600	23	8	16,000	27	9
			13,100	24	8	17,100	29	10
		HIGH STRENGTH	24,800	36	12	32,100	42	14
			27,100	38	13	35,300	45	15
	UNCRACKED	STANDARD	12,700	20	7	15,700	23	8
			13,100	21	7	17,100	25	9
		HIGH STRENGTH	24,600	31	11	32,500	37	13
			27,100	34	12	35,300	39	13
WIND	CRACKED	STANDARD	5,400	12	6	6,800	14	6
			8,300	16	6	11,600	20	7
			13,100	22	8	17,100	26	9
		HIGH STRENGTH	15,300	24	8	21,400	30	10
			19,300	28	10	25,800	34	12
			23,600	32	11	31,000	38	13
			27,100	36	12	35,300	42	14
	UNCRACKED	STANDARD	6,800	12	6	6,800	12	6
			9,400	15	6	12,400	18	6
			13,100	19	7	17,100	23	8
		HIGH STRENGTH	16,800	22	8	21,600	26	9
			20,300	25	9	26,700	30	10
			24,100	28	10	32,200	34	12
			27,100	31	11	35,300	36	12

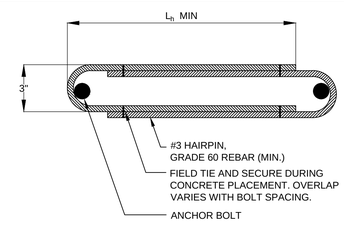

HAIRPIN SHEAR REINFORCEMENT

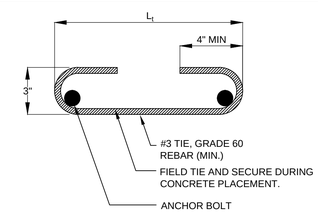

TIE SHEAR REINFORCEMENT

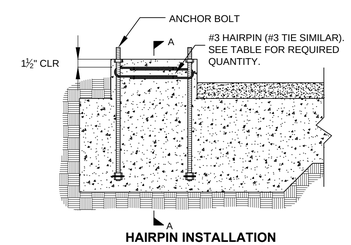

HAIRPIN INSTALLATION
(GARAGE CURB SHOWN. OTHER FOOTING TYPES SIMILAR.)

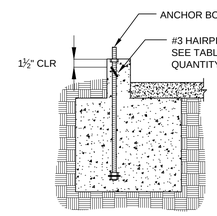

SECTION A-A

REGISTERED DESIGN PROFESSIONAL IS PERMITTED TO MODIFY DETAILS FOR SPECIFIC CONDITIONS.

STRONG-WALL® WOOD SHEARWALL SHEAR ANCHORAGE

MODEL	L_t OR L_h (in.)	SEISMIC [3]: SHEAR REINFORCEMENT	SEISMIC [3]: MINIMUM CURB/ STEMWALL WIDTH (in.)	WIND [4]: SHEAR REINFORCEMENT	WIND [4]: MINIMUM CURB/ STEMWALL WIDTH (in.)	WIND [4]: ASD ALLOWABLE SHEAR LOAD, V (lb.) [6] UNCRACKED	WIND [4]: ASD ALLOWABLE SHEAR LOAD, V (lb.) [6] CRACKED
WSW12	10¼	(1) #3 HAIRPIN	8[5]	SEE NOTE 6	6	1,035	740
WSW18	15	(1) #3 HAIRPIN	8[5]	(1) #3 HAIRPIN	6	HAIRPIN REINFORCEMENT ACHIEVES MAXIMUM ALLOWABLE SHEAR LOAD OF THE WSW	
WSW24	19	(2) #3 HAIRPINS	8[5]	(1) #3 HAIRPIN	6		

NOTES:
1. SHEAR ANCHORAGE DESIGNS CONFORM TO ACI 318-11 AND ACI 318-14 AND ASSUME MINIMUM 2,500 PSI CONCRETE.
2. SHEAR REINFORCEMENT IS NOT REQUIRED FOR INTERIOR FOUNDATION APPLICATIONS (PANEL INSTALLED AWAY FROM EDGE OF CONCRETE), OR BRACED WALL PANEL APPLICATIONS.
3. SEISMIC INDICATES SEISMIC DESIGN CATEGORY C THROUGH F. DETACHED 1 AND 2 FAMILY DWELLINGS IN SDC C MAY USE WIND ANCHORAGE SOLUTIONS.
4. WIND INCLUDES SEISMIC DESIGN CATEGORY A AND B AND DETACHED 1 AND 2 FAMILY DWELLINGS IN SDC C.
5. WHERE NOTED, MINIMUM CURB/STEMWALL WIDTH IS 6 INCHES WHEN STANDARD STRENGTH ANCHOR BOLT IS USED.
6. USE (1) #3 TIE FOR WSW12 WHEN PANEL DESIGN SHEAR FORCE EXCEEDS TABULATED ANCHORAGE ALLOWABLE SHEAR LOAD.
7. #4 GRADE 40 SHEAR REINFORCEMENT MAY BE SUBSTITUTED FOR WSW SHEAR ANCHORAGE SOLUTIONS.

STRONG-WALL® WSW SHEAR ANCHORAGE SCHEDULE AND DETAILS | 5

NO.	DATE	REVISIONS
0	07/01/2016	FIRST RELEASE - 2015 IBC

SIMPSON STRONG-TIE COMPANY, INC.
HOME OFFICE:
5956 W. LAS POSITAS BLVD.
PLEASANTON, CA 94588
TEL: (800) 999-5099

SIMPSON Strong-Tie® THERE IS NO EQUAL

STRONG-WALL® WSW
ANCHORAGE DETAILS
ENGINEERED DESIGNS

SIMPSON Strong-Tie® THERE IS NO EQUAL

NAME
DATE 07-01-2016
SCALE N.T.S.
CHECKED
SHEET **WSW1**
OF SHEETS
JOB NO.

STRONG-WALL® WOOD SHEARWALL MODELS

MODEL NO.	W (in.)	H (in.)	ANCHOR BOLTS		TOTAL WALL WEIGHT (lb.)
			QUANTITY	DIA. (in.)	
WSW12x7	12	78	2	7/8	100
WSW18x7	18	78	2	7/8	145
WSW12x7.5	12	85 1/2	2	7/8	110
WSW18x7.5	18	85 1/2	2	7/8	155
WSW12x8	12	93 1/4	2	7/8	115
WSW18x8	18	93 1/4	2	7/8	165
WSW24x8	24	93 1/4	2	1	225
WSW12x9	12	105 1/4	2	7/8	130
WSW18x9	18	105 1/4	2	7/8	185
WSW24x9	24	105 1/4	2	1	245
WSW12x10	12	117 1/4	2	7/8	140
WSW18x10	18	117 1/4	2	7/8	205
WSW24x10	24	117 1/4	2	1	270
WSW12x11	12	129 1/4	2	7/8	150
WSW18x11	18	129 1/4	2	7/8	220
WSW24x11	24	129 1/4	2	1	295
WSW12x12	12	141 1/4	2	7/8	165
WSW18x12	18	141 1/4	2	7/8	240
WSW24x12	24	141 1/4	2	1	320
WSW18x13	18	153 1/4	2	7/8	255
WSW24x13	24	153 1/4	2	1	345
WSW24x14	24	168	2	1	375
WSW24x16	24	192	2	1	425
WSW18x20	18	240	2	7/8	385
WSW24x20	24	240	2	1	520

NOTES:
1. FOR HEIGHTS NOT LISTED, ORDER THE NEXT TALLEST PANEL AND TRIM TO FIT. MINIMUM TRIMMED HEIGHT FOR ALL PANELS IS 74½".
2. ALL PANELS COME WITH TWO PRE-ATTACHED HOLDOWNS, TWO STANDARD HEX NUTS, TWO STRUCTURAL WASHERS, TWO WSW-TOW PLATES AND INSTALLATION INSTRUCTIONS.
3. ALL PANELS ARE 3½" THICK.

STRONG-WALL® WSW MODELS 1

REGISTERED DESIGN PROFESSIONAL IS PERMITTED TO MODIFY DETAILS FOR SPECIFIC CONDITIONS.

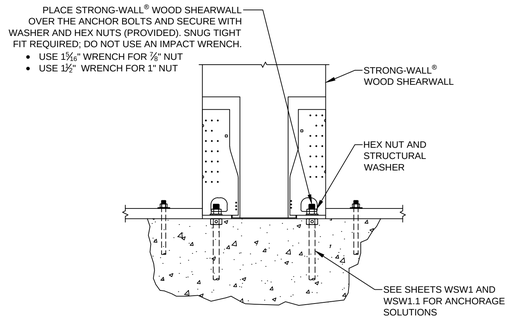

STANDARD INSTALLATION BASE CONNECTION 4

STANDARD TOP CONNECTION 6

TOP OF WALL HEIGHT ADJUSTMENTS 9

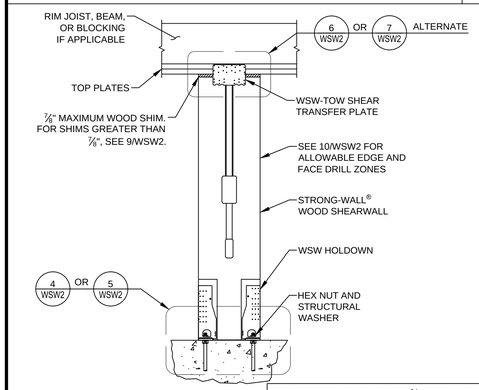

REGISTERED DESIGN PROFESSIONAL IS PERMITTED TO MODIFY DETAILS FOR SPECIFIC CONDITIONS.

WSW DESIGNED TO PROVIDE ⅛" GAP BETWEEN LSL AT BASE OF WSW AND CONCRETE. ENSURE CONCRETE IS LEVEL AND SMOOTH BENEATH PANEL. GRIND OR FILL AS NECESSARY.

SINGLE STORY WSW ON CONCRETE 2

WOOD FLOOR SYSTEM BASE CONNECTION 5

ALTERNATE TOP CONNECTION 7

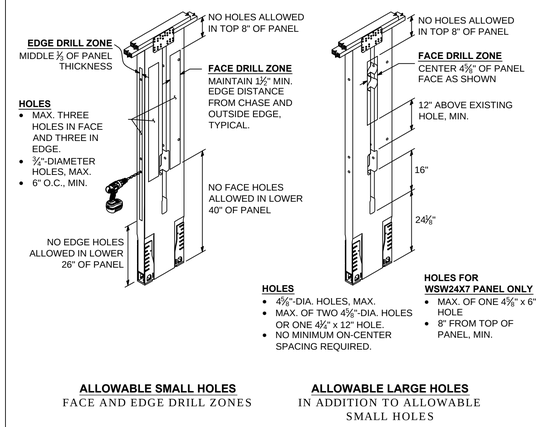

TRIM ZONE AND ALLOWABLE HOLES 10

ALTERNATE WSW GARAGE FRONT OPTIONS 3

RAKE WALL 8

NOTES 11

1. STRONG-WALL WOOD SHEARWALL IS MANUFACTURED AND TRADEMARKED BY "SIMPSON STRONG-TIE COMPANY INC."HOME OFFICE: 5956 W. LAS POSITAS BLVD. , PLEASANTON, CA 94588 TEL: (800) 999-5099, FAX: (925) 847-1597. "SIMPSON STRONG-TIE COMPANY INC." IS AN ISO 9001-2008 REGISTERED COMPANY.
2. USE OF THIS PRODUCT IS SUBJECT TO THE APPROVAL OF THE LOCAL BUILDING DEPARTMENT.
3. THIS PRODUCT IS PART OF THE OVERALL LATERAL FORCE RESISTING SYSTEM OF THE STRUCTURE. DESIGN OF THE BUILDING'S LATERAL FORCE RESISTING SYSTEM, INCLUDING THE LOAD PATH TO TRANSFER LATERAL FORCES FROM THE STRUCTURE TO THE GROUND, IS THE RESPONSIBILITY OF THE DESIGNER.
4. ENGINEER OF RECORD IS PERMITTED TO MODIFY DETAILS FOR SPECIFIC CONDITIONS.
5. THE CONTRACTOR SHALL VERIFY ALL DIMENSIONS, CONDITIONS, ELEVATIONS, ETC. PRIOR TO INSTALLATION OF ANY COMPONENTS FOR THE STRONG-WALL SB SYSTEM. IF ANY DISCREPANCIES ARE FOUND, THEY SHALL BE BROUGHT TO THE ATTENTION OF THE DESIGNER FOR CLARIFICATION PRIOR TO CONSTRUCTION.
6. INSTALLATION OF PRODUCT SHALL BE DONE IN CONFORMANCE TO THESE DRAWINGS. THE PERFORMANCE OF MODIFIED PRODUCTS OR ALTERED INSTALLATION PROCEDURES ARE THE SOLE RESPONSIBILITY OF THE DESIGNER.
7. SIMPSON STRONG-TIE COMPANY INC. RESERVES THE RIGHT TO CHANGE SPECIFICATIONS, DESIGNS, AND MODELS WITHOUT NOTICE OR LIABILITY FOR SUCH CHANGES.
8. ALL HARDWARE CALLED OUT IS SIMPSON STRONG-TIE.
9. SEE ICC-ES ESR-2652 OR CITY OF LOS ANGELES RR25730 AS APPLICABLE FOR ADDITIONAL INFORMATION.

NO.	DATE	REVISIONS
0	07/01/2016	FIRST RELEASE - 2015 IBC

SIMPSON STRONG-TIE COMPANY, INC.
HOME OFFICE:
5956 W. LAS POSITAS BLVD.
PLEASANTON, CA 94588
TEL: (800) 999-5099

SIMPSON Strong-Tie® THERE IS NO EQUAL

STRONG-WALL WSW
FRAMING DETAILS
ENGINEERED DESIGNS

SIMPSON Strong-Tie® THERE IS NO EQUAL

NAME
DATE 07-01-2016
SCALE N.T.S.
CHECKED
SHEET WSW2
OF SHEETS
JOB NO.

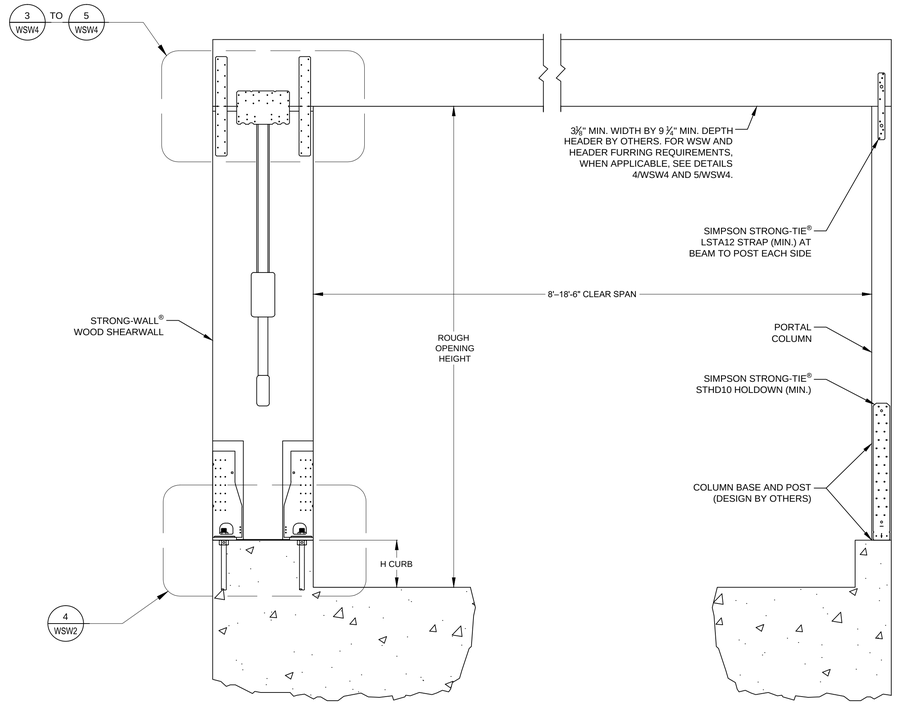

GARAGE HEADER ROUGH OPENING HEIGHT		
MODEL NO.	H CURB	ROUGH OPENING HEIGHT
WSW12x7 WSW18x7 WSW24x7	5½"	6'-11½"
	6"	7'-0"
WSW12x7.5 WSW18x7.5 WSW24x7.5	0"	7'-1½"
WSW12x8 WSW18x8 WSW24x8	5½"	8'-2¾"
	6"	8'-3¾"

NOTES:
1. IF REQUIRED ROUGH OPENING HEIGHT EXCEEDS TABLE VALUE, SPECIFY NEXT TALLER PANEL AND TRIM AS NECESSARY. THE STRONG-WALL® WOOD SHEARWALL MAY BE TRIMMED TO A MINIMUM HEIGHT OF 74½".
2. FURRING DOWN GARAGE HEADER MAY BE REQUIRED FOR CORRECT ROUGH OPENING HEIGHT.

REGISTERED DESIGN PROFESSIONAL IS PERMITTED TO MODIFY DETAILS FOR SPECIFIC CONDITIONS.

WSW DESIGNED TO PROVIDE ⅛" GAP BETWEEN LSL AT BASE OF WSW AND CONCRETE. ENSURE CONCRETE IS LEVEL AND SMOOTH BENEATH PANEL. GRIND OR FILL AS NECESSARY.

STRONG-WALL WOOD SHEARWALL SINGLE PORTAL ASSEMBLY — 1

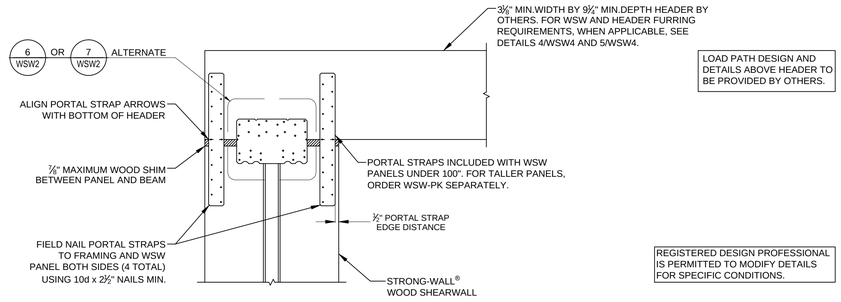

REGISTERED DESIGN PROFESSIONAL IS PERMITTED TO MODIFY DETAILS FOR SPECIFIC CONDITIONS.

PORTAL TOP CONNECTION — 3

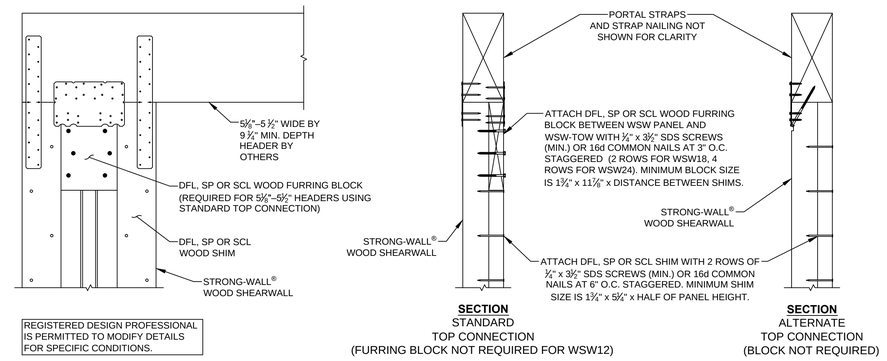

REGISTERED DESIGN PROFESSIONAL IS PERMITTED TO MODIFY DETAILS FOR SPECIFIC CONDITIONS.

FURRING FOR 5 1/8" TO 5 1/2" HEADER — 4

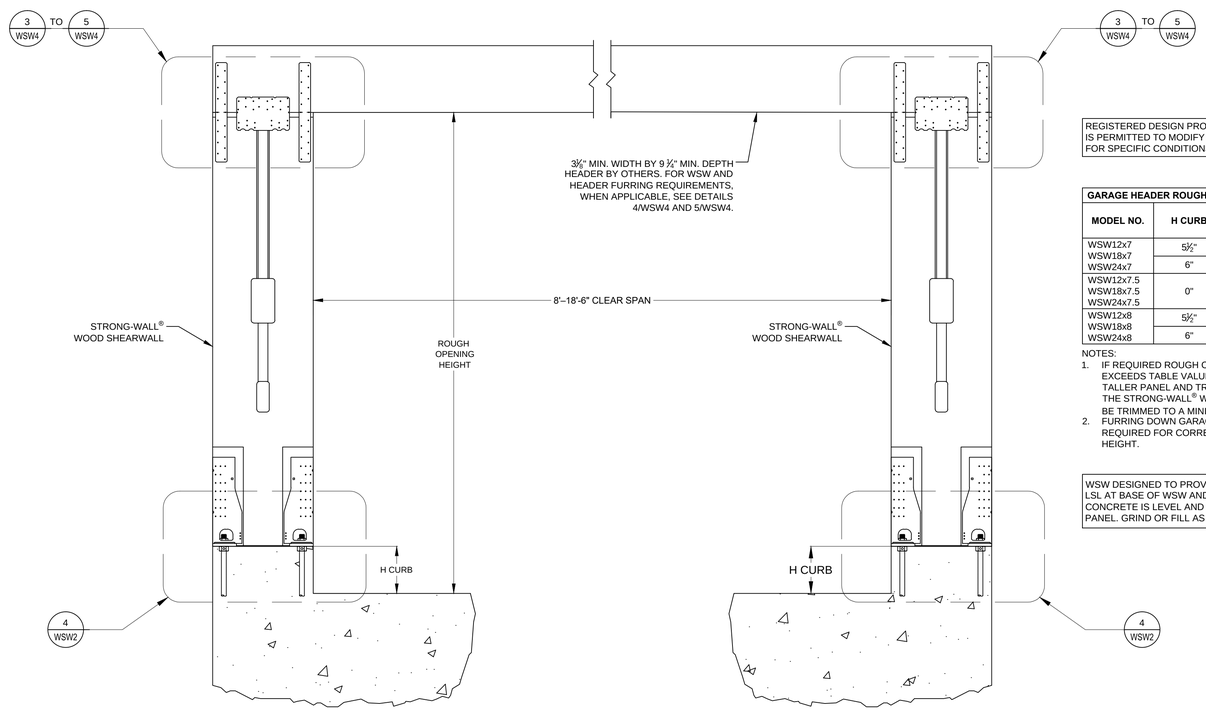

REGISTERED DESIGN PROFESSIONAL IS PERMITTED TO MODIFY DETAILS FOR SPECIFIC CONDITIONS.

GARAGE HEADER ROUGH OPENING HEIGHT		
MODEL NO.	H CURB	ROUGH OPENING HEIGHT
WSW12x7 WSW18x7 WSW24x7	5½"	6'-11½"
	6"	7'-0"
WSW12x7.5 WSW18x7.5 WSW24x7.5	0"	7'-1½"
WSW12x8 WSW18x8 WSW24x8	5½"	8'-2¾"
	6"	8'-3¾"

NOTES:
1. IF REQUIRED ROUGH OPENING HEIGHT EXCEEDS TABLE VALUE, SPECIFY NEXT TALLER PANEL AND TRIM AS NECESSARY. THE STRONG-WALL® WOOD SHEARWALL MAY BE TRIMMED TO A MINIMUM HEIGHT OF 74½".
2. FURRING DOWN GARAGE HEADER MAY BE REQUIRED FOR CORRECT ROUGH OPENING HEIGHT.

WSW DESIGNED TO PROVIDE ⅛" GAP BETWEEN LSL AT BASE OF WSW AND CONCRETE. ENSURE CONCRETE IS LEVEL AND SMOOTH BENEATH PANEL. GRIND OR FILL AS NECESSARY.

STRONG-WALL WOOD SHEARWALL DOUBLE PORTAL ASSEMBLY — 2

FURRING FOR 3 1/8" HEADER — 5

1. STRONG-WALL WOOD SHEARWALL IS MANUFACTURED AND TRADEMARKED BY "SIMPSON STRONG-TIE COMPANY INC."HOME OFFICE: 5956 W. LAS POSITAS BLVD. , PLEASANTON, CA 94588 TEL: (800) 999-5099, FAX: (925) 847-1597. "SIMPSON STRONG-TIE COMPANY INC." IS AN ISO 9001-2008 REGISTERED COMPANY.
2. USE OF THIS PRODUCT IS SUBJECT TO THE APPROVAL OF THE LOCAL BUILDING DEPARTMENT.
3. THIS PRODUCT IS PART OF THE OVERALL LATERAL FORCE RESISTING SYSTEM OF THE STRUCTURE. DESIGN OF THE BUILDING'S LATERAL FORCE RESISTING SYSTEM, INCLUDING THE LOAD PATH TO TRANSFER LATERAL FORCES FROM THE STRUCTURE TO THE GROUND, IS THE RESPONSIBILITY OF THE DESIGNER.
4. ENGINEER OF RECORD IS PERMITTED TO MODIFY DETAILS FOR SPECIFIC CONDITIONS.
5. THE CONTRACTOR SHALL VERIFY ALL DIMENSIONS, CONDITIONS, ELEVATIONS, ETC. PRIOR TO INSTALLATION OF ANY COMPONENTS FOR THE STRONG-WALL SB SYSTEM. IF ANY DISCREPANCIES ARE FOUND, THEY SHALL BE BROUGHT TO THE ATTENTION OF THE DESIGNER FOR CLARIFICATION PRIOR TO CONSTRUCTION.
6. INSTALLATION OF PRODUCT SHALL BE DONE IN CONFORMANCE TO THESE DRAWINGS. THE PERFORMANCE OF MODIFIED PRODUCTS OR ALTERED INSTALLATION PROCEDURES ARE THE SOLE RESPONSIBILITY OF THE DESIGNER.
7. SIMPSON STRONG-TIE COMPANY INC. RESERVES THE RIGHT TO CHANGE SPECIFICATIONS, DESIGNS, AND MODELS WITHOUT NOTICE OR LIABILITY FOR SUCH CHANGES.
8. ALL HARDWARE CALLED OUT IS SIMPSON STRONG-TIE.
9. SEE ICC-ES ESR-2652 OR CITY OF LOS ANGELES RR25730 AS APPLICABLE FOR ADDITIONAL INFORMATION.

NOTES — 6

NO.	DATE	REVISIONS
0	07/01/2016	FIRST RELEASE - 2015 IBC

SIMPSON STRONG-TIE COMPANY, INC.
HOME OFFICE:
5956 W. LAS POSITAS BLVD.
PLEASANTON, CA 94588
TEL: (800) 999-5099

SIMPSON Strong-Tie® THERE IS NO EQUAL

STRONG-WALL® WSW
PORTAL SYSTEM
FRAMING DETAILS
ENGINEERED DESIGNS

SIMPSON Strong-Tie® THERE IS NO EQUAL

NAME
DATE 07-01-2016
SCALE N.T.S.
CHECKED
SHEET **WSW4**
OF SHEETS
JOB NO.

GENERAL NOTES

1. THE FOLLOWING NOTES, DETAILS, SCHEDULES & SPECIFICATIONS SHALL APPLY TO ALL PHASES OF THIS PROJECT (UNLESSSS SPECIFICALLY OTHERWISE NOTED (UON). NOTES AND DETAILS ON THE STRUCTURAL PLANS SHALL TAKE PRECEDENCE OVER GENERAL NOTES AND TYPICAL DETAILS. WHERE NO DETAILS ARE GIVEN, CONSTRUCTION SHALL BE AS SHOWN FOR SIMILAR WORK
2. ALL DRAWINGS ARE CONSIDERED TO BE PART OF THE CONTRACT DOCUMENTS. THE CONTRACTOR SHALL BE RESPONSIBLE FOR THE REVIEW AND COORDINATION OF ALL DRAWINGS AND SPECIFICATIONS PRIOR TO THE START OF CONSTRUCTION. ANY DISCREPANCIES SHALL BE BROUGHT TO THE ATTENTION OF THE ENGINEER PRIOR TO THE START OF CONSTRUCTION SO THAT A CLARIFICATION CAN BE ISSUED. ANY WORK PERFORMED IN CONFLICT WITH THE CONTRACT DOCUMENTS OR ANY APPLICABLE CODE REQUIREMENTS SHALL BE CORRECTED BY THE CONTRACTOR AT NO EXPENSE TO THE OWNER OR ENGINEER.
3. REFER TO THE ARCHITECTURAL PLANS FOR THE FOLLOWING:
   - 3.1. DIMENSIONS
   - 3.1. SIZE AND LOCATION OF ALL INTERIOR AND EXTERIOR WALL LOCATIONS.
   - 3.2. SIZE AND LOCATION OF ALL FLOOR, ROOF AND WALL OPENINGS
   - 3.3. SIZE AND LOCATION OF ALL DRAINS, SLOPES, DEPRESSIONS, STEPS, ETC.
   - 3.4. SPECIFICATION OF ALL FINISHES & WATERPROOFING
   - 3.5. ALL OTHER NON-STRUCTURAL ELEMENTS
4. REFER TO THE MECHANICAL, ELECTRICAL AND PLUMBING PLANS FOR THE FOLLOWING:
   - 4.1. SIZE AND LOCATION OF ALL EQUIPMENT
   - 4.2. PIPE RUNS, SLEEVES, HANGERS AND TRENCHES
   - 4.3. ALL OTHER MECHANICAL, ELECTRICAL OR PLUMBING RELATED ELEMENTS
5. DO NOT SCALE STRUCTURAL PLANS. CONTRACTOR SHALL USE ALL WRITTEN DIMENSIONS ON ARCHITECTURAL PLANS.
6. CONSTRUCTION MATERIALS SHALL BE UNIFORMLY SPREAD OUT IF PLACED ON FLOOR OR ROOF SO AS TO NOT OVERLOAD THE FRAMING. LOAD SHALL NOT EXCEED THE DESIGN LIVE LOAD PER SQUARE FOOT. IT IS THE CONTRACTOR'S RESPONSIBILITY TO PROVIDE ADEQUATE SHORING AND/OR BRACING AS REQUIRED.
7. SPECIFICATIONS AND DETAILING OF ALL WATERPROOFING AND DRAINAGE ITEMS, WHILE SOMETIMES SHOWN ON THE STRUCTURAL PLANS FOR GENERAL INFORMATION PURPOSES ONLY, ARE SOLELY THE DESIGN RESPONSIBILITY OF OTHERS.
8. THE ENGINEER WILL NOT BE RESPONSIBLE FOR AND WILL NOT HAVE CONTROL OR CHARGE OF CONSTRUCTION MEANS, METHODS, TECHNIQUES, SEQUENCES OR PROCEDURES, OR FOR SAFETY PRECAUTIONS AND PROGRAMS IN CONNECTION WITH THE CONSTRUCTION DELINEATED BY THESE PLANS. IT SHOULD BE UNDERSTOOD THAT THE CONTRACTOR OR HIS/HER AGENT(S) SHALL SUPERVISE AND DIRECT ALL WORK AND SHALL BE SOLELY AND COMPLETELY RESPONSIBLE FOR ALL CONSTRUCTION MEANS, METHODS, TECHNIQUES, SEQUENCES, PROCEDURES AND CONDITIONS ON THE JOB SITE, INCLUDING SAFETY OF ALL PERSONS AND PROPERTY DURING THE ENTIRE PERIOD OF CONSTRUCTION. PERIODIC OBSERVATIONS BY THE ENGINEER, HIS STAFF OR REPRESENTATIVES ARE NOT INTENDED TO INCLUDE VERIFICATION OF DIMENSIONS OR REVIEW THE ADEQUACY OF THE CONTRACTOR'S SAFETY MEASURES ON OR NEAR THE CONSTRUCTION SITE.
9. MODIFICATIONS OF THE PLANS, NOTES, DETAILS AND SPECIFICATIONS SHALL NOT BE PERMITTED WITHOUT PRIOR APPROVAL FROM THE ENGINEER.
10. ALL WORKMANSHIP SHALL CONFORM TO THE BEST PRACTICE PREVAILING IN THE VARIOUS TRADES PERFORMING THE WORK. THE CONTRACTOR SHALL BE RESPONSIBLE FOR COORDINATING THE WORK OF ALL TRADES.
11. IT IS THE CONTRACTOR'S RESPONSIBILITY TO ENSURE THAT ONLY APPROVED STRUCTURAL PLANS ARE USED DURING THE COURSE OF CONSTRUCTION. THE USE OF UNAPPROVED DOCUMENTS SHALL BE AT THE CONTRACTOR'S OWN RISK. CORRECTIONS OF ALL WORK BASED ON SUCH DOCUMENTS SHALL BE PERFORMED AT THE CONTRACTOR'S EXPENSE.
12. THESE PLANS AND SPECIFICATIONS REPRESENT THE STRUCTURAL DESIGN ONLY. NO INFORMATION NOR WARRANTY IS PROVIDED FOR THE WORK OF ANY OTHER CONSULTANT (ARCHITECT, MECHANICAL, ELECTRICAL, ETC.). THIS INCLUDES, BUT IS NOT LIMITED TO, WATERPROOFING, DRAINAGE, VENTILATION, ACCESSIBILITY, OR DIMENSIONS.

FOUNDATIONS

1. REFER TO STRUCTURAL DESIGN PARAMETERS SECTION ON SHEET S-1.1 FOR ALL SOIL DESIGN VALUES USED IN CALCULATIONS.
2. SOILS VALUES PER GEOLOGIC/GEOTECHNICAL REPORT REFERENCED ON FOUNDATION PLAN. THIS REPORT AND ALL RECOMMENDATIONS CONTAINED THEREIN ARE TO BE CONSIDERED A PART OF THESE PLANS.
3. IT IS THE CONTRACTOR'S RESPONSIBILITY TO OBTAIN A COPY OF THE SOILS REPORT FROM THE OWNER. A COPY OF THE SOILS REPORT SHALL BE ON THE JOB SITE DURING THE COURSE OF CONSTRUCTION.
4. UNEXPECTED SOIL CONDITIONS: ALLOWABLE VALUES AND SUBSEQUENT FOUNDATION DESIGNS ARE BASED ON SOIL CONDITIONS WHICH ARE SHOWN BY TEST BORINGS. ACTUAL SOIL CONDITIONS WHICH DEVIATE APPRECIABLY FROM THAT SHOWN IN THE TEST BORINGS SHALL BE REPORTED TO THE ENGINEER IMMEDIATELY.
5. ALL COMPACTION, FILL, BACKFILLING AND SITE PREPARATION SHALL BE PERFORMED IN ACCORDANCE WITH PROJECT SOILS REPORT OR CBC APPENDIX CHAPTER J. ALL SUCH WORK SHALL BE PERFORMED UNDER THE SUPERVISION OF THE PROJECT SOILS ENGINEER.
6. EXCAVATE TO REQUIRED DEPTHS AND DIMENSIONS (AS INDICATED IN THE DRAWINGS), CUT SQUARE AND SMOOTH WITH FIRM LEVEL BOTTOMS. CARE SHALL BE TAKEN NOT TO OVER-EXCAVATE FOUNDATION AT LOWER ELEVATION AND PREVENT DISTURBANCE OF SOILS AROUND HIGH ELEVATION.
7. FOUNDATIONS SHALL BE POURED IN NEAT EXCAVATIONS.
8. EXCAVATE ALL FOUNDATIONS TO REQUIRED DEPTHS INTO COMPACTED FILL (AS PER PLANS AND DETAILS) AND AS VERIFIED BY THE BUILDING OFFICIAL AND/OR SOILS ENGINEER.
9. ALL FOUNDATIONS SHALL BE INSPECTED AND APPROVED BY THE APPROPRIATE BUILDING OFFICIAL AND/OR A REPRESENTATIVE OF THE SOILS ENGINEER PRIOR TO FORMING AND PLACEMENT OF REINFORCING OR CONCRETE.
10. FOUNDATIONS SHALL NOT BE POURED UNTIL ALL REQUIRED REINFORCING STEEL, FRAMING HARDWARE, SLEEVES, INSERTS, CONDUITS, PIPES, ETC. AND FORMWORK IS PROPERLY PLACED AND INSPECTED BY THE APPROPRIATE BUILDING OFFICIALS/INSPECTORS).
11. IT IS THE RESPONSIBILITY OF THE CONTRACTOR IN CHARGE OF FRAMING TO PROPERLY POSITION ALL HOLDOWN BOLTS, ANCHOR BOLTS, COLUMN BASES, AND ALL OTHER CAST-IN-PLACE HARDWARE. REFER TO TYPICAL DETAILS. ALL HARDWARE TO BE SECURED PRIOR TO FOUNDATION INSPECTIONS.
12. THE SIDES AND BOTTOMS OF DRY EXCAVATIONS MUST BE MOISTENED JUST PRIOR TO PLACING CONCRETE; CONVERSELY, DE-WATER FOOTINGS AS REQUIRED TO REMOVE STANDING WATER AND TO MAINTAIN OPTIMUM WORKING CONDITIONS.
13. THE CONTRACTOR SHALL BE SOLELY RESPONSIBLE FOR ALL EXCAVATION PROCEDURES INCLUDING LAGGING, SHORING, AND THE PROTECTION OF ADJACENT PROPERTY, STRUCTURES, STREETS, AND UTILITIES IN ACCORDANCE WITH ALL FEDERAL, STATE AND LOCAL SAFETY ORDINANCES. THE CONTRACTOR SHALL PROVIDE FOR THE DESIGN AND INSTALLATION OF ALL CRIBBING, BRACING AND SHORING REQUIRED.

CONCRETE

1. ALL CONCRETE SHALL HAVE:
   - 1.1. AN ULTIMATE COMPRESSIVE STRENGTH (F'C') OF 2500 PSI AT 28 DAYS (UON).
   - 1.2. A MAXIMUM SLUMP OF 5" AT POINT OF PLACEMENT FOR SLABS AND FOOTINGS. CAISSONS SHALL HAVE A 4" TO 6" SLUMP AT "DRY" HOLES AND A 6" - 8" SLUMP AT "WET" HOLES.
   - 1.3. A W/C RATIO OF 0.55 OR LESS FOR ALL SLABS, WALLS, AND COLUMNS, AND 0.60 OR LESS FOR ALL FOUNDATIONS.
   - 1.4. A NORMAL DRY-WEIGHT DENSITY (UON)
2. SPECIAL INSPECTION IS NOT REQUIRED, EXCEPT WHERE SPECIFIED HEREIN, ON THE STRUCTURAL PLANS, OR BY THE BUILDING DEPARTMENT. AS A MINIMUM, SPECIAL INSPECTION IS ALWAYS REQUIRED ON:
   - 2.1. STRUCTURAL SLABS, FLAT PLATES
   - 2.2. WALLS, COLUMNS, BEAMS
   - 2.3. PILES, CAISSONS
   - 2.4. WELDING OF REINFORCEMENT, INSTALLATION OF MECHANICAL BAR SPLICE DEVICES, EPOXY APPLICATIONS

   WHEN REQUIRED OR SPECIFIED, SPECIAL INSPECTION SERVICES SHALL CONFORM TO CBC CHAPTER 17 AND SHALL BE PROVIDED BY AN ICC CERTIFIED INSPECTOR OR BUILDING DEPARTMENT APPROVED ENGINEER.

   THE BUILDING DEPARTMENT RESERVES THE RIGHT TO WAIVE OR REQUIRE THE SPECIAL INSPECTION REQUIREMENTS [CBC 1704.1 AND 1704.4]. NOTHING IN THESE PLANS WAIVES THE BUILDING DEPARTMENT RIGHT TO REQUIRE SPECIAL INSPECTION ON AT ANY POINT AND ON ANY MATERIAL.
3. TESTING OF MATERIALS USED IN CONCRETE CONSTRUCTION MUST BE PERFORMED AS NOTED ON STRUCTURAL PLANS OR AT THE REQUEST OF THE BUILDING DEPARTMENT TO DETERMINE IF MATERIALS ARE QUALITY SPECIFIED. TESTS OF MATERIALS AND OF CONCRETE SHALL BE MADE BY AN APPROVED AGENCY AND AT THE EXPENSE OF THE OWNER; SUCH TESTS SHALL BE MADE IN ACCORDANCE WITH THE STANDARDS LISTED IN CBC TABLE 1705.3.

   WHEN TESTING OF CONCRETE IS REQUIRED, FOUR (4) TEST CYLINDERS SHALL BE TAKEN FROM EACH 150 YARDS, OR FRACTION THEREOF, POURED IN ANY ONE DAY. ONE (1) CYLINDER SHALL BE TESTED AT SEVEN (7) DAYS; TWO (2) AT 28 DAYS; ONE (1) SHALL BE HELD IN RESERVE. IF CONTRACTOR ELECTS TO HAVE ADDITIONAL TESTS PERFORMED FOR "EARLY-BREAK" RESULTS, ADDITIONAL TEST CYLINDERS MUST BE TAKEN. AT NO TIME SHALL THE CONTRACTOR INSTRUCT THE TESTING AGENCY TO PERFORM TESTS ON A SCHEDULE DIFFERENT THAT ABOVE WITHOUT THE PRIOR AUTHORIZATION OF THE ENGINEER.

   CONTRACTOR IS RESPONSIBLE FOR COMPLYING WITH APPLICABLE TESTING REQUIREMENTS OF THE BUILDING DEPARTMENT. COPIES OF ALL TEST REPORTS SHALL BE PROVIDED TO ENGINEER AND BUILDING DEPARTMENT FOR REVIEW IN A TIMELY MANNER.
4. THE CONTRACTOR SHALL REMOVE AND REPLACE ANY CONCRETE WHICH FAILS TO ATTAIN SPECIFIED 28 DAY COMPRESSIVE STRENGTH IF SO DIRECTED BY THE ENGINEER. ANY DEFECTS IN THE HARDENED CONCRETE SHALL BE REPAIRED TO THE SATISFACTION OF THE ENGINEER AND/OR ARCHITECT OR THE HARDENED CONCRETE SHALL BE REPLACED AT THE CONTRACTOR'S EXPENSE.
5. ALL CONCRETE WORK SHALL CONFORM WITH CBC CHAPTER 19.
6. ALL CEMENT SHALL BE PORTLAND CEMENT TYPE I OR II AND SHALL CONFORM TO ASTM C 150.
7. ALL AGGREGATES SHALL CONFORM TO ASTM C33. MAXIMUM AGGREGATE SIZES:
   - 7.1. FOOTINGS: 1-1/2"
   - 7.2. ALL OTHER WORK: 1"
8. WHERE NOT SPECIFICALLY DETAILED, THE MINIMUM CONCRETE COVER ON REINFORCING STEEL SHALL BE:
   - 8.1. PERMANENTLY EXPOSED TO EARTH OR WEATHER
     - 8.1.1. CAST AGAINST EARTH: 3"
     - 8.1.2. CAST AGAINST FORMS: 2"
   - 8.2. NOT EXPOSED TO EARTH OR WEATHER
     - 8.2.1. SLABS, WALLS, JOISTS: 3/4"
     - 8.2.2. BEAMS, GIRDERS, COLUMNS: 1-1/2"
9. MINIMUM LAP SPLICE LENGTH FOR ALL REINFORCING STEEL SHALL BE 48 BAR DIAMETER (UON) ON THE STRUCTURAL PLANS AND/OR DETAILS. ALL LAP SPLICES TO BE STAGGERED.
10. ALL ANCHOR BOLTS USED IN CONCRETE CONSTRUCTION SHALL HAVE A MINIMUM TOTAL EMBEDMENT AS FOLLOWS (UON):
    - 10.1. 5/8" DIA.: 7"
    - 10.2. 3/4" DIA.: 8"
    - 10.3. 7/8" DIA.: 9"
    - 10.4. 1" DIA.: 10"

    OVERALL LENGTH OF ANCHOR BOLTS SHALL BE COORDINATED WITH SILL PLATE REQUIREMENTS AS INDICATED ELSEWHERE IN THESE SPECIFICATIONS. ALL ANCHOR BOLTS IN CONTACT WITH PRESERVATIVE-TREATED WOOD SHALL BE HOT DIPPED ZINC GALVANIZED OR STAINLESS STEEL.
11. ALL REINFORCING STEEL, ANCHOR BOLTS, DOWELS, INSERTS, AND ANY OTHER HARDWARE TO BE CAST IN CONCRETE SHALL BE WELL SECURED IN POSITION PRIOR TO FOUNDATION INSPECTION. ALL HARDWARE TO BE INSTALLED IN ACCORDANCE WITH RESPECTIVE MANUFACTURER'S SPECIFICATIONS. REFER TO ARCHITECTURAL AND STRUCTURAL PLANS FOR LOCATIONS OF EMBEDDED ITEMS.
12. LOCATIONS OF ALL CONSTRUCTION JOINTS, OTHER THAN SPECIFIED ON THE STRUCTURAL PLANS, SHALL BE APPROVED BY THE ARCHITECT AND ENGINEER PRIOR TO FORMING. CONSTRUCTION JOINTS SHALL BE THOROUGHLY AIR AND WATER CLEANED AND HEAVILY ROUGHENED SO AS TO EXPOSE COARSE AGGREGATES. ALL SURFACES TO RECEIVE FRESH CONCRETE SHALL BE MAINTAINED CONTINUOUSLY WET AT LEAST THREE (3) HOURS IN ADVANCE OF CONCRETE PLACEMENT.

    UNLESSSS SPECIFICALLY DETAILED OR OTHERWISE NOTED, CONSTRUCTION AND CONTROL JOINTS SHALL BE PROVIDED IN ALL CONCRETE SLABS-ON-GRADE. JOINTS SHALL BE LOCATED SUCH THAT THE AREA DOES NOT EXCEED 400 SQ. FEET.
13. THE ARCHITECT, ENGINEER AND APPROPRIATE INSPECTORS SHALL BE NOTIFIED IN A TIMELY MANNER FOR A REINFORCEMENT INSPECTION PRIOR TO THE PLACEMENT OF ANY CONCRETE.
14. THE CONTRACTOR SHALL OBTAIN APPROVAL FROM THE ARCHITECT AND THE ENGINEER PRIOR TO PLACING SLEEVES,PIPES, DUCTS, CHASES, CORING AND OPENING ON OR THROUGH STRUCTURAL CONCRETE BEAMS, WALLS, FLOORS, AND ROOF SLABS UNLESSSS SPECIFICALLY DETAILED OR NOTED ON THE PLANS. ALL PILES OR CONDUITS PASSING THROUGH CONCRETE MEMBERS SHALL BE SLEEVED WITH STANDARD STEEL PIPE SECTIONS.
15. THE CONTRACTOR IS RESPONSIBLE FOR DESIGN, INSTALLATION, MAINTENANCE AND REMOVAL OF ALL FORMWORK. FORMS SHALL BE PROPERLY CONSTRUCTED, SUFFICIENTLY TIGHT TO PREVENT LEAKAGE, SUFFICIENTLY STRONG, AND BRACED TO MAINTAIN THEIR SHAPE AND ALIGNMENT UNTIL NO LONGER NEEDED FOR CONCRETE SUPPORT. JOINTS IN FORMWORK SHALL BE TIGHTLY FITTED AND BLOCKED, AND SHALL PRODUCE A FINISHED CONCRETE SURFACE THAT IS TRUE AND FREE FROM BLEMISHES. FORMS FOR EXPOSED CONCRETE SHALL BE PRE-APPROVED BY THE ARCHITECT TO ENSURE CONFORMANCE WITH DESIGN INTENT .
16. REMOVE FORM WORK IN ACCORDANCE WITH THE FOLLOWING SCHEDULE:
    - 16.1. FORMS AT SLAB EDGE: 1 DAY
    - 16.2. SIDE FORMS AT FOOTINGS: 2 DAYS
    - 16.3. ALL OTHER VERTICAL SURFACES: 7 DAYS
    - 16.4. BEAMS, COLUMNS, GIRDERS: 15 DAYS
    - 16.5. ELEVATED SLABS: 28 DAYS

    ENGINEER RESERVES THE RIGHT TO MODIFY REMOVAL SCHEDULE ABOVE BASED ON FIELD OBSERVATIONS, CONCRETE CONDITIONS, AND/OR CONCRETE TEST RESULTS.
17. ALL CONCRETE (EXCEPT SLABS-ON-GRADE 6" OR LESS) SHALL BE MECHANICALLY VIBRATED AS IT IS PLACED. VIBRATOR TO BE OPERATED BY EXPERIENCED PERSONNEL. THE VIBRATOR SHALL BE USED TO CONSOLIDATE THE CONCRETE. THE VIBRATOR SHALL NOT BE USED TO CONVEY CONCRETE, NOR SHALL IT BE PLACED ON REINFORCING AND/OR FORMS. CONCRETE IN CAISSONS SHALL BE PLACED AND CONSOLIDATED IN AN APPROVED MANNER.
18. CONCRETE SHALL BE MAINTAINED IN A MOIST CONDITION FOR A MINIMUM OF FIVE (5) DAYS AFTER PLACEMENT.
19. CONCRETE SHALL NOT BE PERMITTED TO FREE FALL MORE THAN SIX (6) FEET. FOR HEIGHTS GREATER THAN SIX (6) FEET, USE TREMIE, PUMP OR OTHER METHOD CONSISTENT WITH APPLICABLE STANDARDS.
20. CONTRACTOR SHALL SUBMIT MIX DESIGNS FOR ALL CONCRETE WITH ULTIMATE COMPRESSIVE STRENGTH GREATER THAN 2500 PSI TO ARCHITECT AND ENGINEER FOR APPROVAL SEVEN (7) DAYS PRIOR TO PLACEMENT. MIX DESIGNS SHALL BE PREPARED BY AN APPROVED TESTING LABORATORY. SUFFICIENT DATA MUST BE PROVIDED FOR ALL ADMIXTURES.
21. REFER TO ARCHITECTURAL PLANS FOR LOCATIONS OF ALL DIMENSIONS, SLAB DEPRESSIONS, SLOPES, DRAINS, CURBS, AND CONTROL JOINTS.

REINFORCEMENT

1. REINFORCING STEEL SHALL BE TO DEFORMED, CLEAN, FREE OF RUST, GREASE OR ANY OTHER MATERIAL LIKELY TO IMPAIR CONCRETE BOND.
2. ALL BARS SHALL CONFORM TO ASTM A615, GRADE 60 MINIMUM (UON ON STRUCTURAL PLANS), EXCEPT THAT #3 & #4 BARS MAY BE GRADE 40. ALL WELD WIRE FABRIC (WWF) SHALL CONFORM TO ASTM A185.
3. REINFORCING STEEL THAT IS TO BE WELDED SHALL CONFORM TO ASTM A706. ALL WELDING OF REINFORCEMENT SHALL BE SUBJECT TO SPECIAL INSPECTION.
4. 4. CONTRACTOR SHALL TAKE NECESSARY STEPS (STANDARD TIES, ANCHORAGE DEVICES, ETC.) TO SECURE ALL REINFORCING STEEL IN THEIR TRUE POSITION AND PREVENT DISPLACEMENT DURING CONCRETE PLACEMENT.
5. FABRICATION, PLACEMENT AND INSTALLATION OF REINFORCING STEEL SHALL CONFORM TO:
   - 5.1. CONCRETE REINFORCING STEEL INSTITUTE (CRSI) MANUAL OF STANDARD PRACTICE
6. SHOP DRAWINGS FOR FABRICATION OF REINFORCING STEEL SHALL BE APPROVED BY THE CONTRACTOR AND SUBMITTED TO THE ARCHITECT AND ENGINEER FOR REVIEW AND APPROVAL PRIOR TO FABRICATION. SHOP DRAWINGS ARE NOT REQUIRED FOR SLABS-ON-GRADE OR FOUNDATIONS UON ON THE STRUCTURAL PLANS.
7. HEATING OF REINFORCING STEEL TO AID IN BENDING AND SHAPING OF BARS IS NOT PERMITTED. ALL BENDS IN REINFORCING STEEL ARE TO BE MADE COLD. ALL BEND RADII SHALL CONFORM TO CRSI MANUAL OF STANDARD PRACTICE.
8. REFER TO CONCRETE AND MASONRY NOTES FOR SPECIFIC MINIMUM SPLICE LENGTH AND SPLICE STAGGERING REQUIREMENTS. LAP WELDED WIRE FABRIC (WWF) REINFORCEMENT TWO (2) MODULES MINIMUM (UON). ALL SPLICES ARE TO BE STAGGERED.

STRUCTURAL STEEL

1. ALL STRUCTURAL STEEL AND CONNECTIONS SHALL BE FABRICATED AND ERECTED IN ACCORDANCE WITH AISC SPECIFICATIONS, SEISMIC PROVISIONS SUPPLEMENTS NO. 1 AND 2, AND CODE OF STANDARD PRACTICE AS AMENDED TO DATE.
2. STEEL FABRICATION SHOP DRAWINGS SHALL BE SUBMITTED FOR REVIEW BY THE ARCHITECT AND ENGINEER PRIOR TO FABRICATION.
3. MATERIALS:
   - 3.1. TUBE SECTIONS ("TS" OR "HSS") SHALL CONFORM TO ASTM A500 GR. B.
   - 3.2. PIPE SECTIONS SHALL BE WELDED SEAMLESS PIPE CONFORMING TO ASTM A53 GR. B OR ASTM A501.
     - 3.2.1. STD INDICATES STANDARD WALL
     - 3.2.2. EXT INDICATES EXTRA STRONG
     - 3.2.3. DBL INDICATES DOUBLE EXTRA STRONG
   - 3.3. ALL OTHER MATERIAL (PLATE, BARS, ETC.) SHALL CONFORM TO ASTM A36 (UON)
4. BOLTS:
   - 4.1. ALL BOLTS SHALL BE ASTM F1554 GRADE 36 (UON) ON THE STRUCTURAL PLANS.
   - 4.2. HIGH STRENGTH BOLTS COMPLYING WITH ASTM A325 AND A490, WHEN SPECIFIED, SHALL REQUIRE SPECIAL INSPECTION IN ACCORDANCE WITH CBC SECTION 1705.2.
   - 4.3. THREADED ROD, WHERE SPECIFIED, SHALL CONFORM WITH ASTM F1554 GRADE 36 (UON) ON THE STRUCTURAL PLANS.
5. BOLT HOLES SHALL BE DRILLED 1/32" TO 1/16" LARGER THAN THE SPECIFIED BOLT DIAMETER.
   - 5.1. WELDING:
   - 5.2. ALL WELDING SHALL BE PERFORMED USING SMAW, GMAW OR FCAW PROCESSES.
   - 5.3. ALL WELDED CONNECTIONS TO BE WELDED IN ACCORDANCE WITH THE LATEST EDITION OF THE AWS D1.1.
   - 5.4. ALL WELDING SHALL BE PERFORMED BY CERTIFIED WELDERS.
   - 5.5. ALL WELDING SHALL BE PERFORMED WITH E70XX ELECTRODES WITH A MINIMUM CVN TOUGHNESS OF 20 FTLB AT -200F.
   - 5.6. WELD LENGTHS SPECIFIED ON THE PLANS ARE THE NET EFFECTIVE LENGTH REQUIRED. WHERE FILLET WELD SYMBOL IS GIVEN WITHOUT INDICATION OF SIZE, USE THE MINIMUM SIZE WELDS AS SPECIFIED IN SECTION 1.17.2 OF THE AISC MANUAL OF STEEL CONSTRUCTION 9TH EDITION.
   - 5.7. NO FIELD WELDING SHALL BE PERMITTED UON ON THE PLANS OR DETAILS.
6. NO HOLES OTHER THAN THOSE SPECIFICALLY DETAILED SHALL BE ALLOWED THROUGH STRUCTURAL STEEL MEMBERS. BURNING OR TORCHING OF HOLES IS NOT PERMITTED UNDER ANY CIRCUMSTANCES.
7. ALL STRUCTURAL STEEL SHALL BE PAINTED ONE SHOP COAT AND TOUCHED-UP IN THE FIELD WITH READ LEAD (OR APPROVED ZINC CHROMATE PRIMER) AS NECESSARY.
8. ANY STEEL MEMBER INTERFACING WITH WOOD FRAMING SHALL HAVE 1/2" DIAMETER STUDS WELDED AT 24" O.C. FOR ATTACHMENT OF WOOD NAILERS. THRU-BOLTING OF NAILERS SHALL NOT BE PERMITTED UON ON THE PLANS OR DETAILS.
9. PROVIDE HOT DIP GALVANIZING OR 3" MINIMUM CONCRETE COVER AROUND ALL STRUCTURAL STEEL BELOW GRADE.

MASONRY

1. SPECIAL INSPECTION IS REQUIRED FOR MASONRY WALLS PER CBC 1704.5
2. MASONRY UNITS: SHALL CONFORM TO ASTM C90, GRADE N, TYPE I, MEDIUM-WEIGHT. THE COMPRESSIVE STRENGTH OF THE MASONRY, F'M, SHALL BE 1500 PSI MINIMUM. REFER TO CBC 2103.
3. MORTAR: SHALL BE TYPE S, WITH A STRENGTH OF 1800 PSI MINIMUM @ 28 DAYS, PROPORTIONED IN CONFORMANCE WITH CBC TABLE 21-A. WHEN THE SPECIFIED MASONRY STRENGTH, F'M, IS GREATER THAN 2000 PSI, THEN THE MORTAR SHALL BE TYPE M. MORTAR STRENGTH SHALL BE EQUAL TO OR GREATER THAN THE MASONRY STRENGTH, F'M. NO MORTARS SHALL BE USED THAT HAVE STOOD FOR MORE THAN ONE-HOUR.
4. GROUT: STRENGTH SHALL BE NO LESS THAN 2500 PSI@ 28 DAYS. CEMENT CONTENT OF THE GROUT SHALL BE INCREASED, AS NECESSARY, TO ACHIEVE THE SPECIFIED MASONRY ASSEMBLY STRENGTH, F'M, AND ADEQUATE WORKABILITY. GROUT COMPRESSIVE STRENGTH, WHEN TESTED PER UBC STANDARD NO. 21-18 SHALL EQUAL OR EXCEED THE CONCRETE MASONRY UNIT STRENGTH. ALL GROUT ADDITIVES SHALL RECEIVE THE PRIOR APPROVAL OF THE ENGINEER AND THE BUILDING OFFICIAL.
5. ADMIXTURES: SHALL NOT BE PERMITTED IN MORTAR OR GROUT UNLESS SUSTAINING DATA HAS BEEN SUBMITTED TO AND APPROVED BY THE ENGINEER. FIRE CLAY, DIRT AND OTHER DELETERIOUS MATERIALS ARE PROHIBITED.
6. AGGREGATES: SAND FOR MORTAR SHALL CONFORM TO ASTM C144 EXCEPT THAT NOT LESS THAN 3% OF THE SAND SHALL PASS THE NUMBER 100 SIEVE. SAND AND PEA GRAVEL FOR GROUT SHALL CONFORM TO ASTM C404, TABLE 1, COARSE AGGREGATE, EXCEPT WHEN OTHER GRADINGS ARE SPECIFICALLY APPROVED BY THE ENGINEER.
7. WATER USED FOR MORTAR AND GROUT SHALL BE CLEAN AND FREE FROM DELETERIOUS AMOUNTS OF ACIDS, SALTS, ALKALI, AND ORGANIC MATERIALS.
8. STEEL REINFORCING: SHALL CONFORM TO ASTM A615, GRADE 60, CLEAN AND FREE OF RUST, EXCEPT THAT #3 BARS MAY BE GRADE 40. REINFORCING STEEL THAT IS TO BE WELDED SHALL CONFORM TO ASTM A706, AND THE WELDING SHALL BE SPECIAL INSPECTED.
9. ANCHOR BOLTS: SEE THE "STRUCTURAL STEEL" SPECIFICATIONS SECTION HEREIN.
10. ALL CELLS SHALL BE SOLID GROUTED (OR "FULLY" GROUTED). MASONRY UNITS SHALL BE LAID IN RUNNING BOND. SURFACES TO BE CLEANED OF ALL LOOSE DEBRIS PRIOR TO SETTING BLOCK. CELLS TO BE IN VERTICAL ALIGNMENT SUCH THAT MINIMUM VERTICAL UNOBSTRUCTED CORE (EXCLUDING HORIZONTAL BARS) IS 2½"X 3" FOR GROUT POURS UP TO 4 FEET AND 3"X3" FOR GROUT POURS UP TO 6 FEET.
11. ALL BED JOINTS ARE TO BE FULL-BEDDED IN MORTAR. END WALLS AND CROSS WEBS FORMING CELLS TO BE FILLED SHALL BE FULL-BEDDED IN MORTAR TO PREVENT LEAKAGE OF GROUT. ALL HEAD JOINTS ARE TO BE SOLIDLY FILLED AT LEAST 1½" BELOW TOP OF MASONRY. HORIZONTAL CONSTRUCTION JOINTS SHALL BE FORMED BY STOPPING THE GROUT POUR 1½" BELOW TOP OF MASONRY.
12. GROUT LIFTS SHALL NOT EXCEED 5 FEET 4 INCHES. GROUT SHALL BE CONSOLIDATED BY MECHANICAL VIBRATION IMMEDIATELY AFTER PLACING TO HELP ENSURE FILLING OF ALL VOIDS. RECONSOLIDATION BY VIBRATION MUST BE DONE AFTER THE INITIAL WATER LOSS AND BEFORE INITIAL SET. FOR GROUT POURS EXCEEDING 5 FEET 4 INCHES, CLEANOUT OPENINGS SHALL BE PROVIDED AT THE BOTTOM OF EACH CELL WITH A VERTICAL BAR FOR EACH FOOT. CONFORMING TO MSJC 3.2 F. CLEANOUTS SHALL BE SEALED AFTER INSPECTION AND BEFORE GROUTING. WHERE CLEANOUTS ARE NOT PROVIDED, SPECIAL PROVISIONS MUST BE MADE TO KEEP THE BOTTOM AND SIDES OF THE GROUT SPACES, AS WELL AS THE MINIMUM TOTAL CLEAR AREA REQUIRED, CLEAN AND CLEAR PRIOR TO GROUTING. FOR GROUT POURS EXCEEDING 4 FEET, CONFORM TO CBC HIGH-LIFT GROUTING REQUIREMENTS.
13. REINFORCEMENT PLACEMENT:
    - 13.1. REINFORCING SHALL BE HELD SECURELY IN POSITION. VERTICAL BARS SHALL BE HELD IN POSITION AT TOP AND BOTTOM AND AT INTERVALS NOT MORE THAN 200 BAR DIAMETERS
    - 13.2. LAP SPLICES SHALL BE 40 BAR DIAMETERS MINIMUM (UON). ADJACENT BAR LAPS SHALL BE STAGGERED 3'-0" MINIMUM. HOOKS SHALL BE 16 BAR DIAMETERS (UON)
    - 13.3. REINFORCING BARS TO HAVE GROUT COVERAGE OF AT LEAST ONE BAR DIAMETER (½" MINIMUM) FROM INSIDE FACE OF SHELL, HOWEVER THE CLEAR DISTANCE FROM OUTSIDE FACE OF MASONRY TO THE REINFORCING SHALL NOT BE LESS THAN 2" WHEN MASONRY IS EXPOSED TO SOIL OR 1½" FOR OTHER CONDITIONS.
    - 13.4. THE CLEAR DISTANCE BETWEEN PARALLEL BARS IS 1" MINIMUM AND (AND SHALL NOT BE LESS THAN 1 BAR DIAMETER), EXCEPT THAT THE TWO BARS IN A CONTACT SPLICE SHALL BE IN CONTACT. THIS CLEAR DISTANCE REQUIREMENT ALSO APPLIES TO THE CLEAR DISTANCE BETWEEN A CONTACT SPLICE AND ADJACENT SPLICES OR BARS. (EXCEPTION: THE MINIMUM CLEAR DISTANCE BETWEEN PARALLEL BARS IN COLUMNS AND PILASTERS IS 2.5 BAR DIAMETERS.
14. REFER TO THE STRUCTURAL DETAILS FOR WALL REINFORCING. AT A MINIMUM, BLOCK WALL VERTICAL REINFORCING SHALL BE #4 @ 18" O.C. AND HORIZONTAL REINFORCING SHALL BE #4 @ 16" O.C. AT LEAST ONE CONTINUOUS HORIZONTAL #4 BAR OR LARGER SHALL BE PLACED IN BOTH THE BOTTOM AND THE TOP COURSE OF MASONRY WALL, (UON).
15. SEE STRUCTURAL SHEETS FOR TYPICAL WALL DETAILS. AT A MINIMUM, DOOR AND WINDOW JAMBS SHALL HAVE 2 - #5 BARS, AND HEADERS (OR "LINTELS") SHALL HAVE 2 - #5 BARS, UON ON THE PLANS. JAMB AND LINTEL BARS SHALL EXTEND A MINIMUM OF 40 BAR DIAMETERS PAST THE OPENING.
16. JAMB REINFORCING STEEL SHALL EXTEND INTO THE FOUNDATION (OR DECK) BELOW WITH LAP BARS OF THE SAME DIAMETER BENT WITH 90-DEGREE STANDARD HOOKS INTO THE FOOTING OR DECK. JAMB STEEL SHALL CONTINUE TO THE TOP OF THE WALL, UNLESS DETAILED OTHERWISE ON THE PLANS, BUT SHALL NOT EXTEND LESS THAN 40 BAR DIAMETERS PAST THE OPENING.
17. MASONRY COLUMNS & PILASTERS: REFER TO THE STRUCTURAL DETAILS FOR REINFORCEMENT REQUIREMENTS. PROVIDE AT LEAST 4 - #3 TIES IN THE TOP 5" OF THE COLU

WOOD STRUCTURAL PANELS (WSP), SUBFLOOR, ROOF AND INTERIOR WALL SHEATHING TO FRAMING AND PARTICLEBOARD WALL SHEATHING TO FRAMING[a]

			Edges (inches)	Intermediate supports (inches)
31.	3/8" - 1/2"	6d common or deformed (2" x 0.113") (subfloor and wall)	6	12
		8d box or deformed (2 1/2" x 0.113") (roof)	6	12
		2 1/2" x 0.113" nail (subfloor and wall)	6	12
		1 3/4" 16 gage staple, 7/16" crown (subfloor and wall)	4	8
		2 1/2" x 0.113" nail (roof)	4	8
		1 3/4" 16 gage staple, 7/16" crown (roof)	3	6
32.	15/32" - 3/4"	8d common (2 1/2" x 0.131"); or 6d deformed (2" x 0.113")	6	12
		2 3/8" x 0.113" nail; or 2" 16 gage staple, 7/16" crown	4	8
33.	7/8" - 1 1/4"	10d common (3" x 0.148"); or 8d deformed (2 1/2" x 0.131")	6	12
OTHER EXTERIOR WALL SHEATHING				
34.	1/2" fiberboard sheathing[b]	1 1/2" galvanized roofing nail (7/16" head diameter); or 1 1/2" 16 gage staple with 7/16" or 1" crown	3	6
35.	25/32" fiberboard sheathing[b]	1 3/4" galvanized roofing nail (7/16" diameter head); or 1 3/4" 16 gage staple with 7/16" or 1" crown	3	6

WOOD STRUCTURAL PANELS, COMBINATION SUBFLOOR UNDERLAYMENT TO FRAMING

			Edges (inches)	Intermediate supports (inches)
36.	3/4" and less	8d common (2 1/2" x 0.131"); or 6d deformed (2" x 0.113")	6	12
37.	7/8" - 1"	8d common (2 1/2" x 0.131"); or 8d deformed (2 1/2" x 0.131")	6	12
38.	3/4" and less	8d common (2 1/2" x 0.131"); or 6d deformed (2" x 0.113")	6	12
PANEL SIDING TO FRAMING				
39.	1/2" or less	6d corrosion-resistant siding (1 3/4" x 0.106"); or 6d corrosion-resistant casing (2" x 0.099")	6	12
40.	5/8"	8d corrosion-resistant siding (2 3/8" x 0.128"); or 8d corrosion-resistant casing (2 1/2" x 0.113")	6	12
INTERIOR PANELING				
41.	3/4"	4d casing (1 1/2" x 0.080"); or 4d finish (1 1/2" x 0.072")	6	12
42.	3/8"	6d casing (2" x 0.099"); or 6d finish (Panel supports at 24 inches)	6	12

For SI: 1 inch = 25.4 mm.

a. Nails spaced at 6 inches at intermediate supports where spans are 48 inches or more. For nailing of wood structural panel and particleboard diaphragms and shear walls, refer to Section 2305. Nails for wall sheathing are permitted to be common, box or casing.
b. Spacing shall be 6 inches on center on the edges and 12 inches on center at intermediate supports for nonstructural applications. Panel supports at 16 inches (20 inches if strength axis in the long direction of the panel, unless otherwise marked).
c. Where a rafter is fastened to an adjacent parallel ceiling joist in accordance with this schedule and the ceiling joist is fastened to the top plate in accordance with this schedule, the number of toenails in the rafter shall be permitted to be reduced by one nail.

ROOF

	DESCRIPTION OF BUILDING ELEMENTS	NUMBER AND TYPE OF FASTENER	SPACING AND LOCATION
1.	Blocking between ceiling joists, rafters or trusses to top plate or other framing below	3-8d common (2 1/2" x 0.131"); or 3-10d box (3" x 0.128"); or 3-3" x 0.131" nails; or 3-3" 14 gage staples, 7/16" crown	Each end, toenail
	Blocking between rafters or truss not at the wall top plate, to rafter or truss	2-8d common (2 1/2" x 0.131") 2-3" x 0.131" nails 2-3"14 gage staples	Each end, toenail
		2-16 d common (3 1/2" × 0.162") 3-3" × 0.131" nails 3-3" 14 gage staples	End nail
	Flat blocking to truss and web filler	16d common (3 1/2" x 0.162") @ 6" o.c. 3" × 0.131" nails @ 6" o.c. 3" × 14 gage staples @ 6".c	Face nail
2.	Ceiling joists to top plate	3-8d common (2 1/2" x 0.131"); or 3-10d box (3" × 0.128"); or 3-3" × 0.131" nails; or 3-3" 14 gage staples, 7/16" crown	Each joist, toenail
3.	Ceiling joist not attached to parallel rafter, laps over partitions (no thrust) (see Section 2308.7.3.1, Table 2308.7.3.1)	3-16d common (3 1/2" x 0.162"); or 4-10d box (3" x 0.128"); or 4-3" x 0.131" nails; or 4-3" 14 gage staples, 7/16" crown	Face nail
4.	Ceiling joist attached to parallel rafter (heel joint) (see Section 2308.7.3.1, Table 2308.7.3.1)	Per Table 2308.7.3.1	Face nail
5.	Collar tie to rafter	3-10d common (3" x 0.148"); or 4-10d box (3" x 0.128"); or 4-3" x 0.131" nails; or 4-3" 14 gage staples, 7/16" crown	Face nail
6.	Rafter or roof truss to top plate (See Section 2308.7.5, Table 2308.7.5)	3-10 common (3" x 0.148"); or 3-16d box (3 1/2" x 0.135"); or 4-10d box (3" x 0.128"); or 4-3" x 0.131 nails; or 4-3" 14 gage staples, 7/16" crown	Toenail [c]
7.	Roof rafters to ridge valley or hip rafters; or roof rafter to 2-inch ridge beam	2-16d common (3 1/2" x 0.162"); or 3-10d box (3" x 0.128"); or 3-3" x 0.131" nails; or 3-3" 14 gage staples, 7/16" crown; or	End nail
		3-10d common (3 1/2" x 0.148"); or 3-16d box (3 1/2" x 0.135"); or 4-10d box (3" x 0.128"); or 4-3" x 0.131" nails; or 4-3" 14 gage staples, 7/16" crown	Toenail

WALL

8.	Stud to stud (not at braced wall panels)	16d common (3 1/2" x 0.162")	24" o.c. face nail
		10d box (3" x 0.128"); or 3" x 0.131" nails; or 3-3" 14 gage staples, 7/16" crown	16" o.c. face nail
9.	Stud to stud and abutting studs at intersecting wall corners (at braced wall panels)	16d common (3 1/2" x 0.162"); or	16" o.c. face nail
		16d box (3 1/2" x 0.135"); or	12" o.c. face nail
		3" x 0.131" nails; or 3-3" 14 gage staples, 7/16" crown	12" o.c. face nail
10.	Built-up header (2" to 2" header)	16d common (3 1/2" x 0.162"); or	16" o.c. each edge, face nail
		16d box (3 1/2" x 0.135")	16" o.c. each edge, face nail
11.	Continuous header to stud	4-8d common (2 1/2" x 0.131"); or 4-10d box (3" x 0.128")	Toenail
12.	Top plate to top plate	16d common (3 1/2" x 0.162"); or	16" o.c. face nail
		10d box (3" x 0.128"); or 3" x 0.131" nails; or 3" 14 gage staples, 7/16" crown	12" o.c. face nail
13.	Top plate to top plate, at end joints	8-16d common (3 1/2" x 0.162"); or 12-10d box (3" x 0.128"); or 12-3"x 0.131" nails; or 12-3" 14 gage staples, 7/16" crown	Each side of end joint, face nail (minimum 24" lap splice length each side of end joint)
14.	Bottom plate to joist, rim joist, band joist or blocking (not at braced wall panels)	16d common (3 1/2" x 0.162"); or	16" o.c. face nail
		16d box (3 1/2" x 0.135"); or 3" x 0.131" nails; or 3" 14 gage staples, 7/16" crown	12" o.c. face nail
15.	Bottom plate to joist, rim joist, band joist or blocking at braced wall panels	2-16d common (3 1/2"× 0.162"); or 3-16d box (3 1/2" x 0.135"); or 4-3" x 0.131" nails; or 4-3" 14 gage staples, 7/16" crown	16" o.c. face nail
16.	Stud to top or bottom plate	4-8d common (2 1/2" x 0.131"); or 4-10d box (3" x 0.128"); or 4-3" x 0.131" nails; or 4-3" 14 gage staples, 7/16" crown; or	Toenail
		2-16d common (3 1/2" x 0.162"); or 3-10d box (3" x 0.128"); or 3-3" x 0.131" nails; or 3-3" 14 gage staples, 7/16" crown	End nail
17.	Top or bottom plate to stud	2-16d common (3 1/2" x 0.162"); or 3-10d box (3" x 0.128"); or 3-3" x 0.131" nails; or 3-3" 14 gage staples, 7/16" crown	End Nail
18.	Top plates, laps at corners and intersections	2-16d common (3 1/2" x 0.162"); or 3-10d box (3" x 0.128"); or 3-3" x 0.131" nails; or 3-3" 14 gage staples, 7/16" crown	Face nail
19.	1" brace to each stud and plate	2-8d common (2 1/2" x 0.131"); or 2-10d box (3" x 0.128"); or 2-3" x 0.131" nails; or 2-3" 14 gage staples, 7/16" crown	Face nail
20.	1" x 6" sheathing to each bearing	2-8d common (2 1/2" x 0.131"); or 2-10d box (3" x 0.128")	Face nail
21.	1" x 8" and wider sheathing to each bearing	2-8d common (2 1/2" x 0.131"); or 3-10d box (3" x 0.128")	Face nail

FLOOR

22.	Joist to sill, top plate, or girder	3-8d common (2 1/2" x 0.131"); or floor 3-10d box (3" x 0.128"); or 3-3" x 0.131" nails; or 3-3"14 gage staples, 7/16" crown	Toenail
23.	Rim joist, band joist, or blocking to top plate, sill or other framing below	8d common (2 1/2" x 0.131"); or 10d box (3" x 0.128"); or 3" x 0.131" nails; or 3" 14 gage staples, 7/16" crown	6" o.c., toenail
24.	1" x 6" subfloor or less to each joist	2-8d common (2 1/2" x 0.131"); or 2-10d box (3" x 0.128")	Face nail
25.	2" subfloor to joist or girder	2-16d common (3 1/2" x 0.162")	Face nail
26.	2" planks (plank & beam – floor & roof)	2-16d common (3 1/2" x 0.162")	Each bearing, face nail
27.	Built-up girders and beams, 2" lumber layers	20d common (4" x 0.192"	32" o.c., face nail at top and bottom staggered on opposite sides
		10d box (3" x 0.128"); or 3" x 0.131" nails; or 3" 14 gage staples, 7/16" crown	24" o.c. face nail at top and bottom staggered on opposite sides
		And: 2-20d common (4" x 0.192"); or 3-10d box (3" x 0.128"); or 3-3" x 0.131" nails; or 3-3" 14 gage staples, 7/16" crown	Ends and at each splice, face nail
28.	Ledger strip supporting joists or rafters	3-16d common (3 1/2" x 0.162"); or 4-10d box (3" x 0.128"); or 4-3" x 0.131" nails; or 4-3" 14 gage staples, 7/16" crown	Each joist or rafter, face nail
29.	Joist to band joist or rim joist	3-16d common (3 1/2" x 0.162"); or 4-10d box (3" x 0.128"); or 4-3" x 0.131" nails; or 4-3" 14 gage staples, 7/16" crown	End nail
30.	Bridging or blocking to joist, rafter or truss	2-8d common (2 1/2" x 0.131"); or 2-10d box (3" x 0.128"); or 2-3" x 0.131" nails; or 2-3" 14 gage staples, 7/16" crown	Each end, toenail

ENGINEERING
239-4151
John A. Kudla
Civil Engineering &
Structural Design
R.C.E. #50652
610 10th ST. UNIT 'A' PASO
ROBLES, CA.

PLAN PREPARED FOR:

ERRON VELA
LOT 147 OF TRACT 1990 - TIMBERLINE DRIVE
PASO ROBLES, CA 93446

REVISION LOG

REV.	DESCRIPTION	DATE

These drawings are the exclusive property of J.K. Engineering and shall be used solely for the purpose of this project on this site. Any use other than the project upon which it is intended for without the written consent of J.K. Engineering and John Kudla is prohibited.

PROJECT NO. 18-0921-17
FILE NAME DJK
DRAWN BY 09/21/18
DATE STRUCTURAL SP.DWG
SHEET TITLE:

FASTENING SCHEDULE (CBC-2016 TABLE2304.10.1)

SHEET NUMBER:

SSP-2

\\jkdrafting\PROJECTS\VelaCorrespondence\Kudla Engineering\Vela, Erron (Single Family Residence)\Garage\STRUCTURAL SP.dwg Nick Swently 9/21/2018 11:46:19 AM