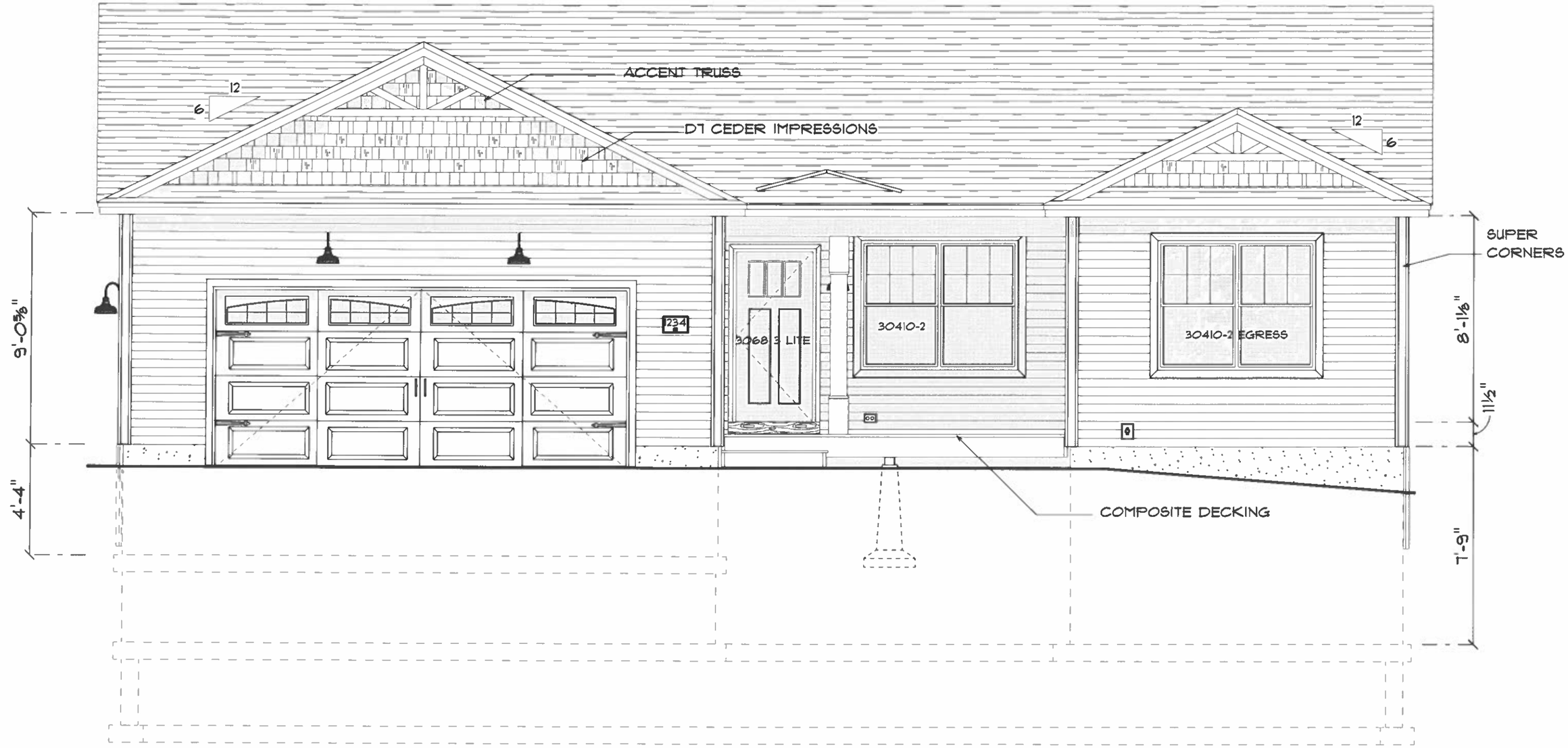

FRONT ELEVATION

SCALE: 1/4" = 1'-0"

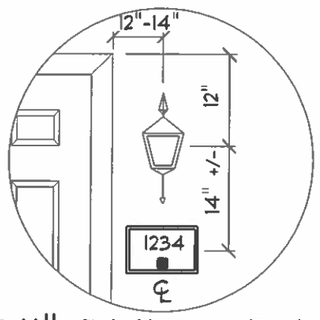

"911" EMERGENCY DETAIL

SCALE: N.T.S.

ELEVATION SYMBOLS	
GFI	GFI ELECTRICAL OUTLET
WH	WATER SILLCOCK
	4" DRYER VENT
	CONDENSATE LINE
E	6" ERV EXHAUST
I	6" ERV INTAKE

THESE DRAWINGS HAVE BEEN DEVELOPED BY PATCO CONSTRUCTION INC. FOR THE TITLED SET ONLY, THE DRAWINGS ARE THE SOLE PROPERTY OF PATCO CONSTRUCTION INC. AND THEY SHALL NOT BE USED, LENT, ALTERED, OR REPRODUCED WITHOUT WRITTEN CONSENT OF PATCO CONSTRUCTION.

PATCO CONSTRUCTION, INC.
1293 MAINE ST. SANFORD, ME. 04073 - (207)324-5574 FAX (207)324-1643
Copyright © 2003 PATCO Construction, Inc. All Rights Reserved.

PATCO SPEC
LOT 16 ROLLING WOODS LN, Wells, ME
CRANDALL II 1413 SQ FT

CONTRACT DATE: 4/7/2026
SCALE: AS SHOWN
DRAWN BY: AMS
JOB NO.:
REVISED: 4/9/2026
SHEET: 1 OF 20

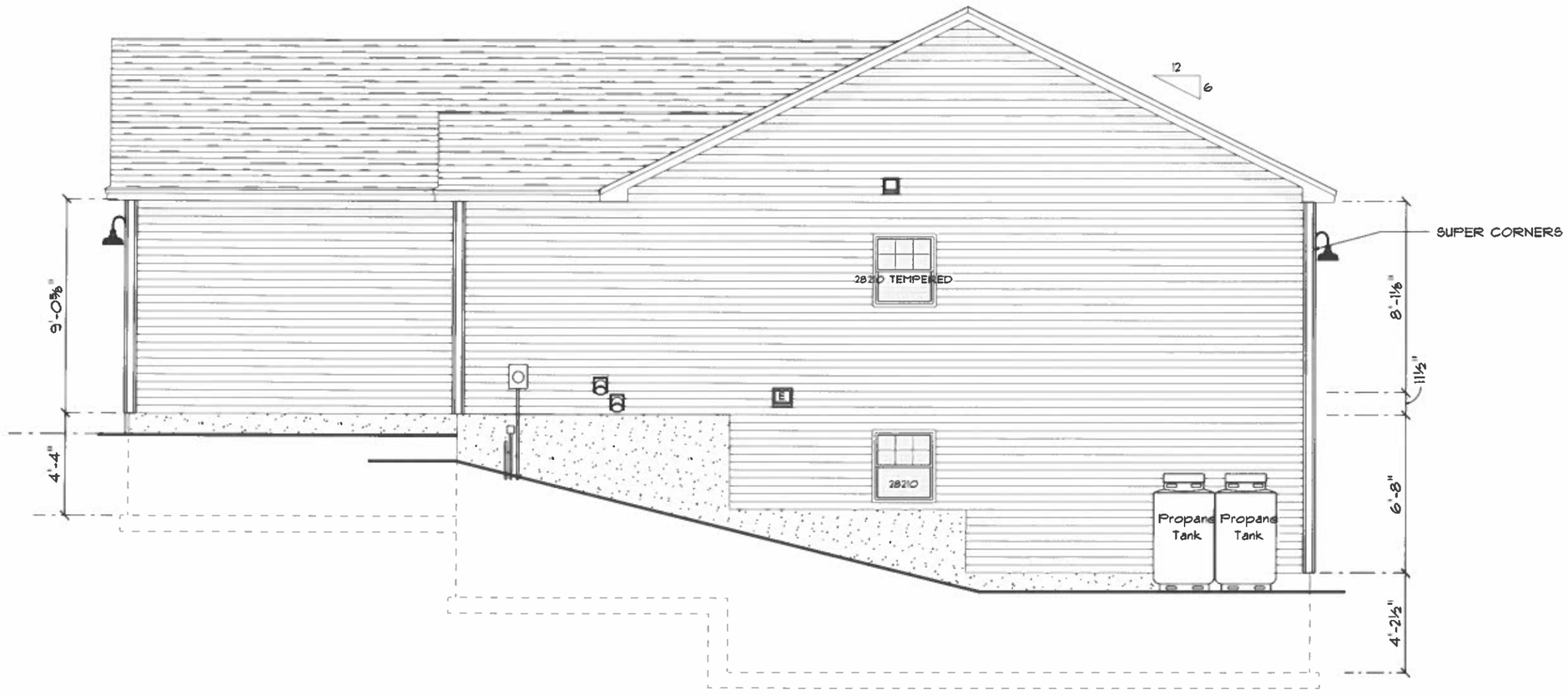

RIGHT ELEVATION

SCALE: 3/16" = 1'-0"

PATCO CONSTRUCTION, INC.
1293 MAINE ST. SANFORD, ME. 04073 - (207)324-5574 FAX (207)324-1643
Copyright © 2003 PATCO Construction, Inc. All Rights Reserved.

PATCO SPEC
LOT 16 ROLLING WOODS LN, Wells, ME
CRANDALL II 1413 SQ FT

CONTRACT DATE: 4/7/2026
SCALE: AS SHOWN
DRAWN BY: AMS
JOB NO.:
REVISED: 4/9/2026
SHEET: 2 OF 20

THESE DRAWINGS HAVE BEEN DEVELOPED BY PATCO CONSTRUCTION INC. FOR THE TITLED SET ONLY, THE DRAWINGS ARE THE SOLE PROPERTY OF PATCO CONSTRUCTION INC. AND THEY SHALL NOT BE USED, LENT, ALTERED, OR REPRODUCED WITHOUT WRITTEN CONSENT OF PATCO CONSTRUCTION.

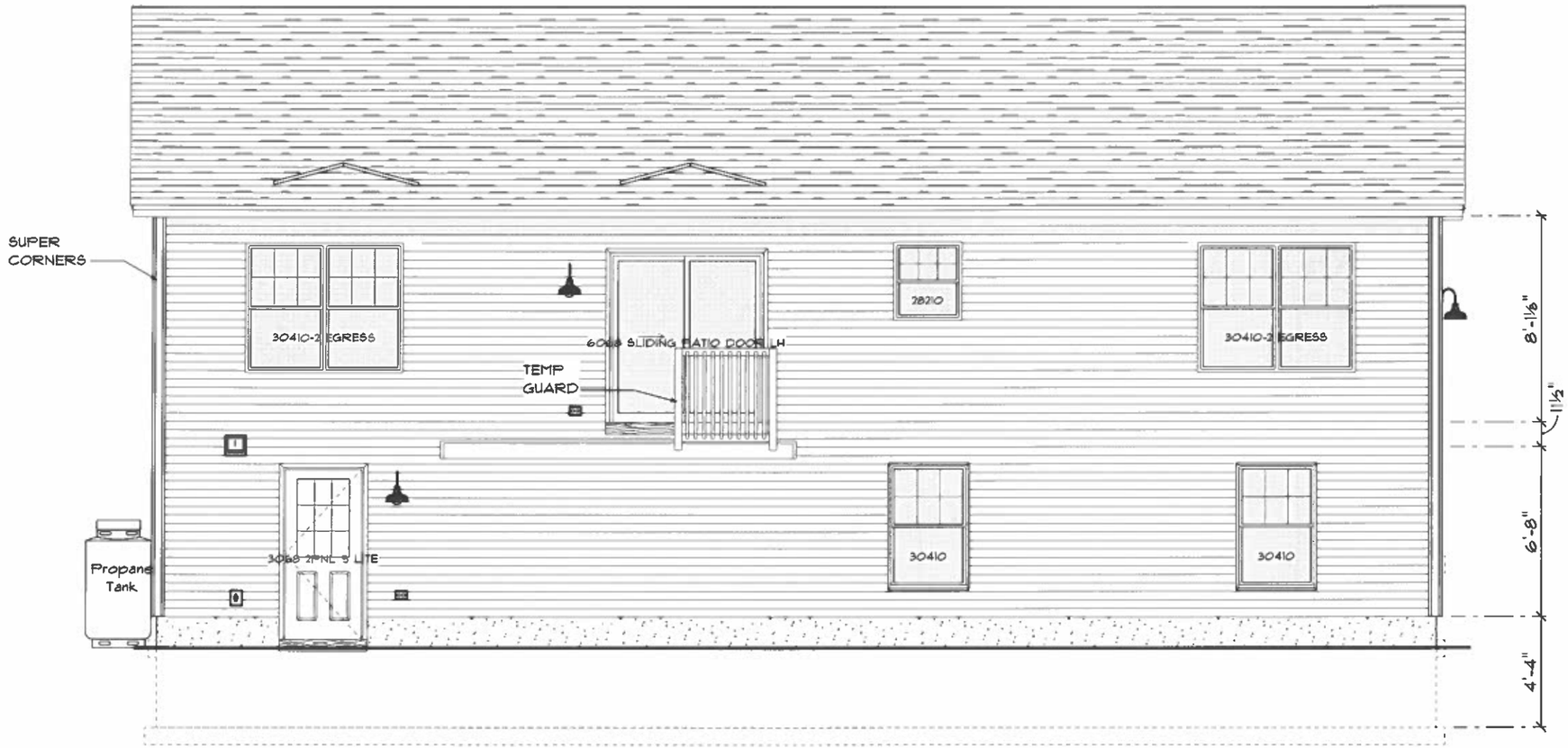

REAR ELEVATION

SCALE: 3/16" = 1'-0"

THESE DRAWINGS HAVE BEEN DEVELOPED BY PATCO CONSTRUCTION INC. FOR THE TITLED SET ONLY, THE DRAWINGS ARE THE SOLE PROPERTY OF PATCO CONSTRUCTION INC. AND THEY SHALL NOT BE USED, LENT, ALTERED, OR REPRODUCED WITHOUT WRITTEN CONSENT OF PATCO CONSTRUCTION.

PATCO CONSTRUCTION, INC.
1293 MAINE ST. SANFORD, ME. 04073 ~ (207)324-5574 FAX (207)324-1643
Copyright © 2009 PATCO Construction, Inc. All Rights Reserved.

PATCO SPEC
LOT 16 ROLLING WOODS LN, Wells, ME
CRANDALL II 1413 SQ FT

CONTRACT DATE: 4/1/2026
SCALE: AS SHOWN
DRAWN BY: AMS
JOB NO.:
REVISED: 4/9/2026
SHEET: 3 OF 20



LEFT ELEVATION

SCALE: 3/16" = 1'-0"

THESE DRAWINGS HAVE BEEN DEVELOPED BY PATCO CONSTRUCTION INC. FOR THE TITLED SET ONLY, THE DRAWINGS ARE THE SOLE PROPERTY OF PATCO CONSTRUCTION INC. AND THEY SHALL NOT BE USED, LENT, ALTERED, OR REPRODUCED WITHOUT WRITTEN CONSENT OF PATCO CONSTRUCTION.

PATCO
CONSTRUCTION, INC.
1293 MAINE ST. SANFORD, ME. 04073 - (207)324-5574 FAX (207)324-1643
Copyright © 2003 PATCO Construction, Inc. All Rights Reserved.

PATCO SPEC
LOT 16 ROLLING WOODS LN, Wells, ME
CRANDALL II 1413 SQ FT

CONTRACT DATE:	4/7/2026
SCALE:	AS SHOWN
DRAWN BY:	AMS
JOB NO.:	
REVISED:	4/9/2026
SHEET:	4 OF 20

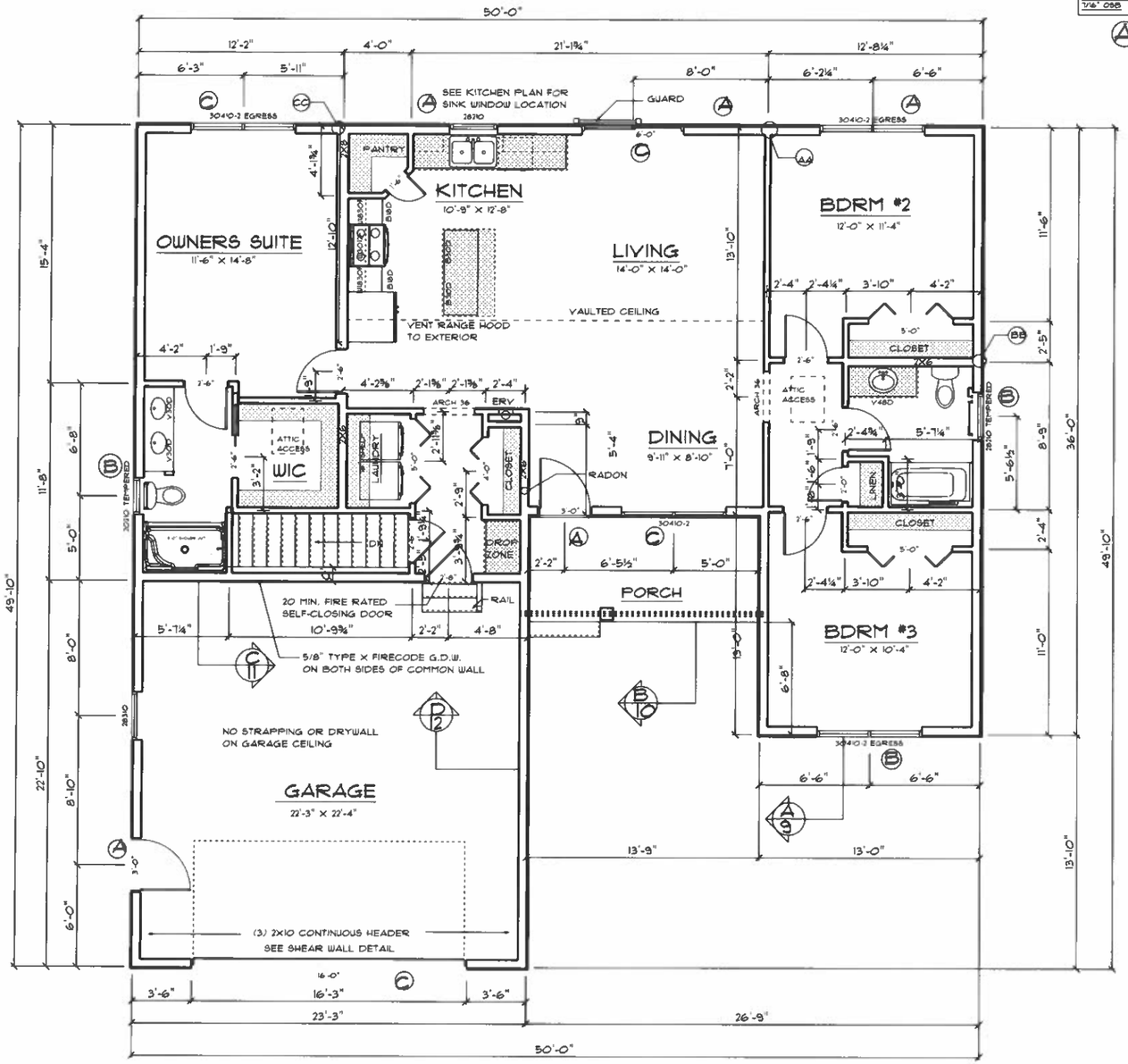

MAIN FLOOR

SCALE: 1/8" = 1'-0"

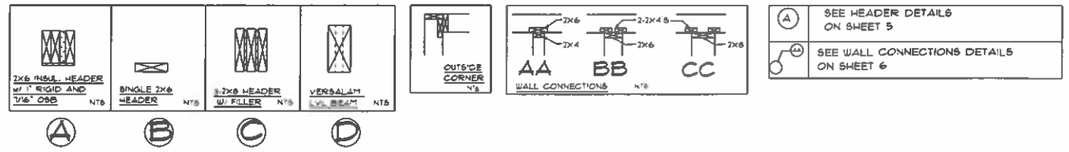

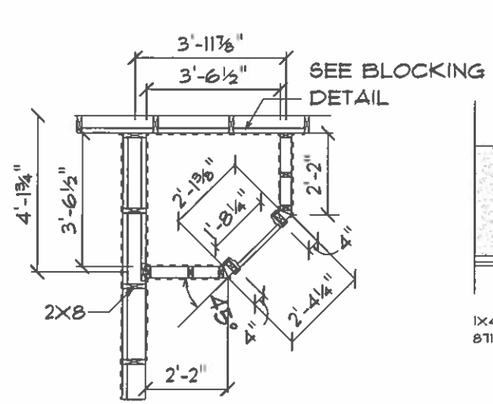

PANTRY FRAMING

SCALE: 1/4" = 1'-0"

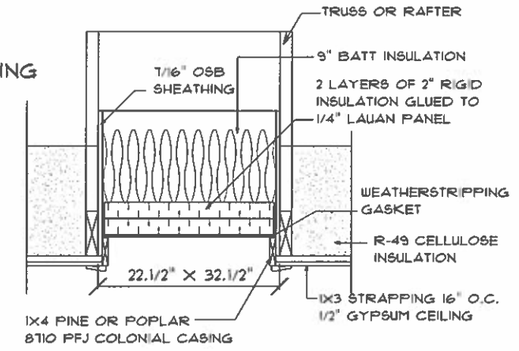

SCUTTLE DETAIL

DOOR SCHEDULE				
COUNT	PRODUCT CODE	R.O. WIDTH	R.O. HEIGHT	HINGE
1	6068 SLIDING PATIO DOOR LH-MODIFIED	6'-0¼"	6'-8¼"	NL
1	2868 CRAFTSMAN 20 MIN. FIRE RATED DOOR	2'-10½"	6'-10½"	L
1	3068 9 LITE	3'-2½"	6'-10½"	R
1	3068 CRAFTSMAN 3 LITE-MODIFIED	3'-2½"	6'-10½"	L

WINDOW SCHEDULE			
PRODUCT CODE	COUNT	R.O. WIDTH	R.O. HEIGHT
20210 TEMPERED	1	2'-2"	3'-1¼"
28210	1	2'-10"	3'-1¼"
28210	1	2'-10"	3'-1¼"
28210 TEMPERED	1	2'-10"	3'-1¼"
28310	1	2'-10"	4'-1¼"
30410	2	3'-2"	5'-1¼"
30410-2	1	6'-2¼"	5'-1¼"
30410-2 EGRESS	3	6'-2¼"	5'-1¼"

THESE DRAWINGS HAVE BEEN DEVELOPED BY PATCO CONSTRUCTION INC. FOR THE TITLED SET ONLY, THE DRAWINGS ARE THE SOLE PROPERTY OF PATCO CONSTRUCTION INC. AND THEY SHALL NOT BE USED, LENT, ALTERED, OR REPRODUCED WITHOUT WRITTEN CONSENT OF PATCO CONSTRUCTION.

PATCO CONSTRUCTION, INC.
1293 MAINE ST. SANFORD, ME. 04073 - (207)324-5574 FAX (207)324-1643
Copyright © 2003 PATCO Construction, Inc. All Rights Reserved.

PATCO SPEC
LOT 16 ROLLING WOODS LN, Wells, ME
CRANDALL II 1413 SQ FT

CONTRACT DATE: 4/1/2026
SCALE: AS SHOWN
DRAWN BY: AMS
JOB NO.:
REVISED: 4/9/2026
SHEET: 5 OF 20

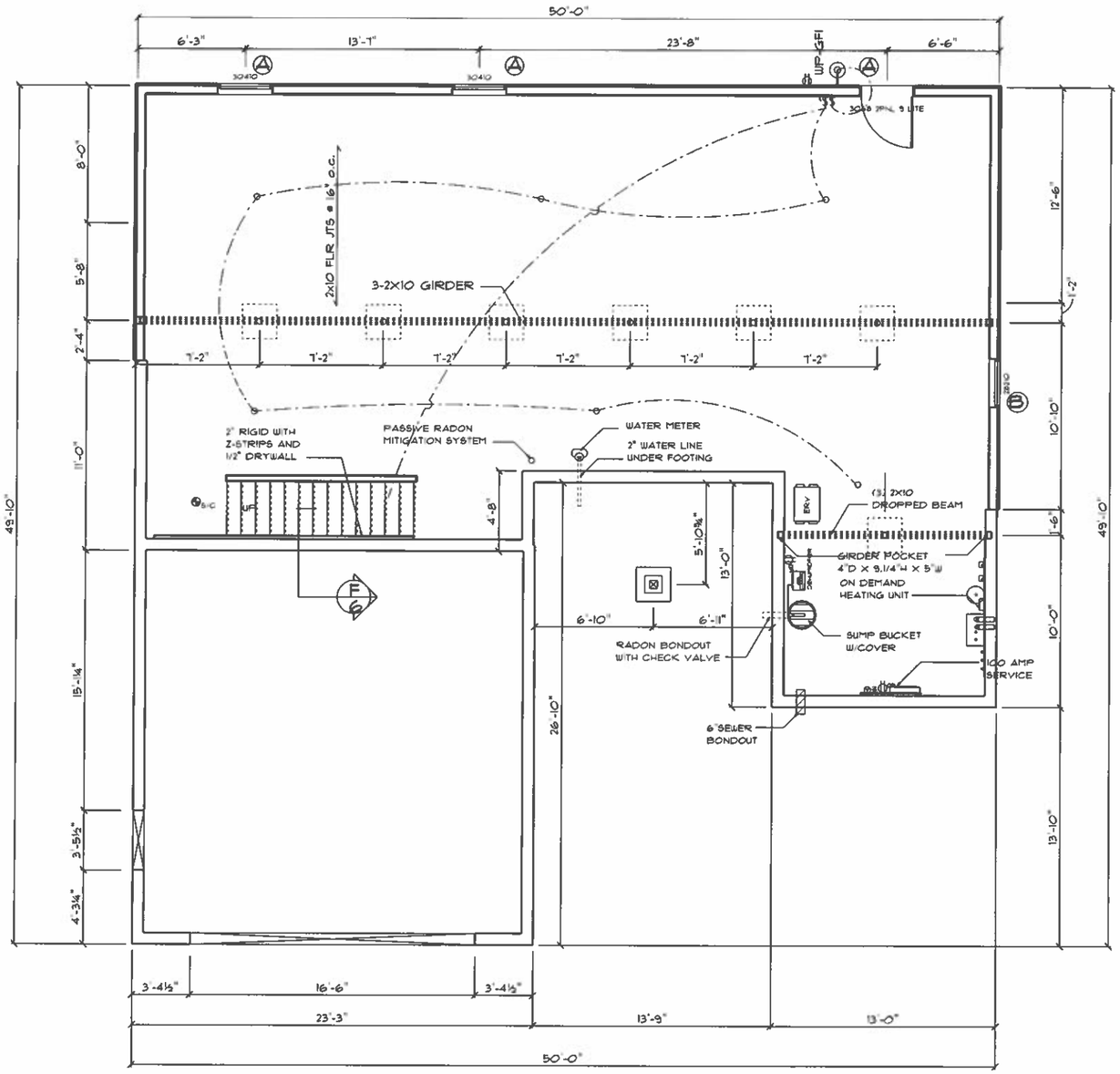

BASEMENT

SCALE: 1/8" = 1'-0"

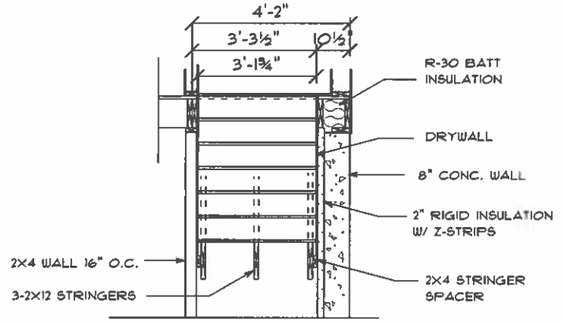

DETAIL F

SCALE: 1/4" = 1'-0"

THESE DRAWINGS HAVE BEEN DEVELOPED BY PATCO CONSTRUCTION INC. FOR THE TITLED SET ONLY, THE DRAWINGS ARE THE SOLE PROPERTY OF PATCO CONSTRUCTION INC. AND THEY SHALL NOT BE USED, LENT, ALTERED, OR REPRODUCED WITHOUT WRITTEN CONSENT OF PATCO CONSTRUCTION.

PATCO CONSTRUCTION, INC.
1293 MAINE ST. SANFORD, ME. 04073 - (207)324-5574 FAX (207)324-1643
Copyright © 2003 PATCO Construction, Inc. All Rights Reserved.

PATCO SPEC
LOT 16 ROLLING WOODS LN, Wells, ME
CRANDALL II 1413 SQ FT

CONTRACT DATE: 4/1/2026
SCALE: AS SHOWN
DRAWN BY: AMS
JOB NO.:
REVISED: 4/9/2026
SHEET: 6 OF 20

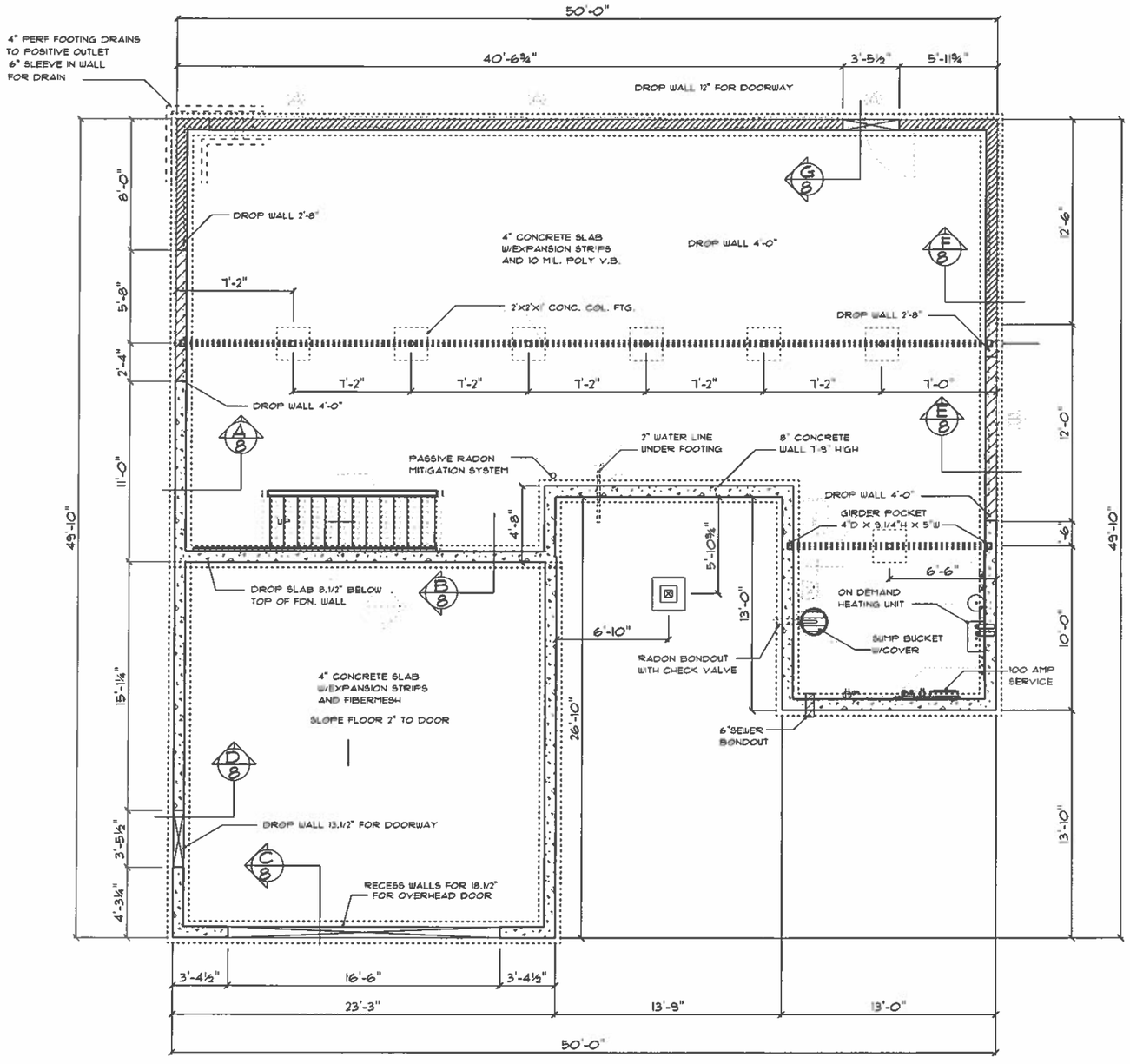

FOUNDATION

SCALE: 1/8" = 1'-0"

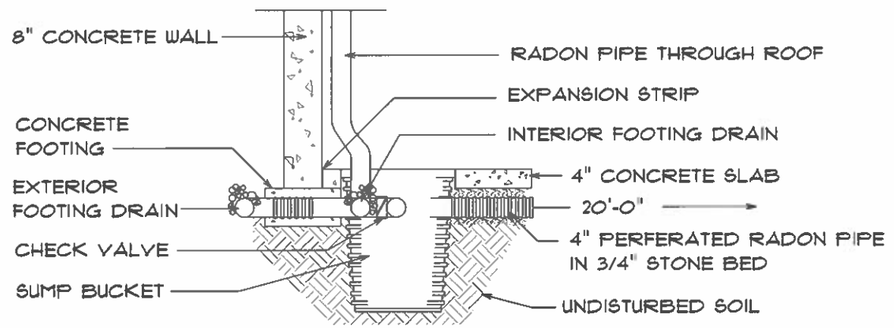

SUMP BUCKET

SCALE: 3/8" = 1'-0"

THESE DRAWINGS HAVE BEEN DEVELOPED BY PATCO CONSTRUCTION INC. FOR THE TITLED SET ONLY, THE DRAWINGS ARE THE SOLE PROPERTY OF PATCO CONSTRUCTION INC. AND THEY SHALL NOT BE USED, LENT, ALTERED, OR REPRODUCED WITHOUT WRITTEN CONSENT OF PATCO CONSTRUCTION.

PATCO CONSTRUCTION, INC.
1293 MAINE ST. SANFORD, ME. 04073 - (207)324-5574 FAX (207)324-1643
Copyright © 2003 PATCO Construction, Inc. All Rights Reserved.

PATCO SPEC
LOT 16 ROLLING WOODS LN, Wells, ME
CRANDALL II 1413 SQ FT

CONTRACT DATE: 4/7/2026
SCALE: AS SHOWN
DRAWN BY: AMS
JOB NO.:
REVISED: 4/9/2026
SHEET: 7 OF 20

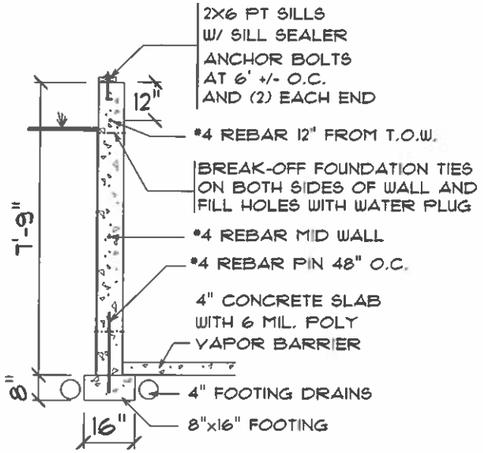

DETAIL "A"

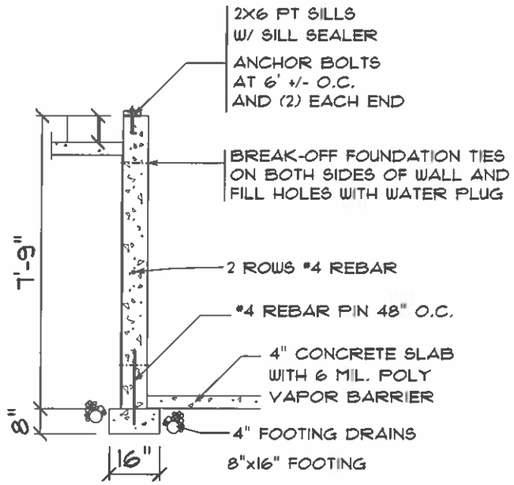

DETAIL "B"

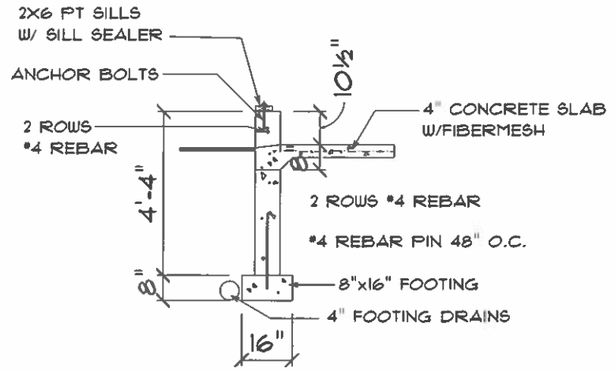

DETAIL "C"

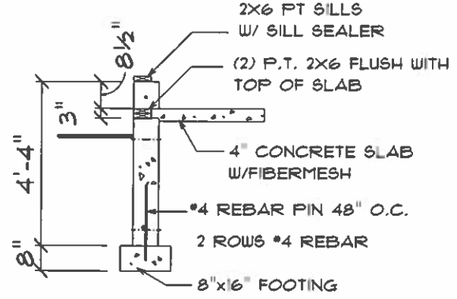

DETAIL "D"

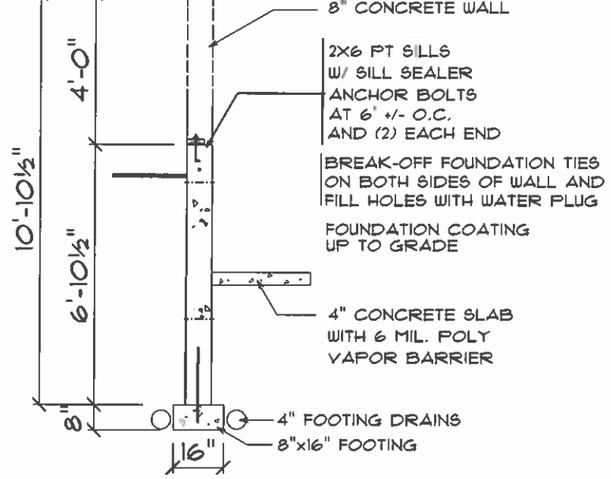

DETAIL "E"

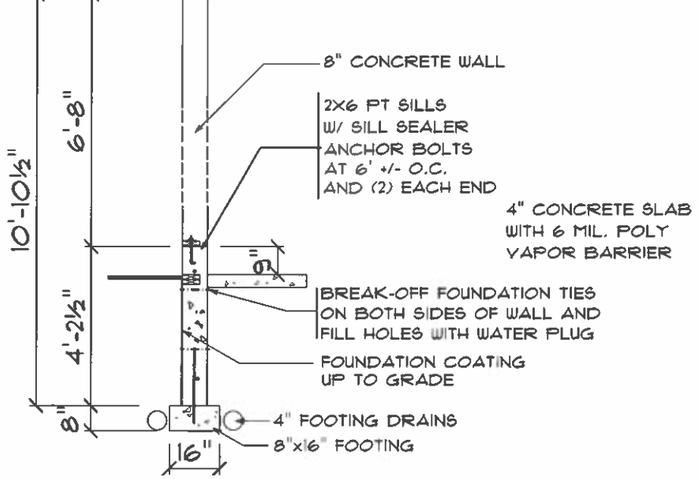

DETAIL "F"

FOUNDATION DETAILS

SCALE: 1/4" = 1'-0"

THESE DRAWINGS HAVE BEEN DEVELOPED BY PATCO CONSTRUCTION INC. FOR THE TITLED SET ONLY. THE DRAWINGS ARE THE SOLE PROPERTY OF PATCO CONSTRUCTION INC. AND THEY SHALL NOT BE USED, LENT, ALTERED, OR REPRODUCED WITHOUT WRITTEN CONSENT OF PATCO CONSTRUCTION.

PATCO
CONSTRUCTION, INC.
1293 MAINE ST. SANFORD, ME. 04073 - (207)324-5574 FAX (207)324-1643
Copyright @ 2003 PATCO Construction, Inc. All Rights Reserved.

PATCO SPEC
LOT 16 ROLLING WOODS LN, Wells, ME
CRANDALL II 1413 SQ FT

CONTRACT DATE: 4/7/2026
SCALE: AS SHOWN
DRAWN BY: AMS
JOB NO.:
REVISED: 4/8/2026
SHEET: 8 OF 20

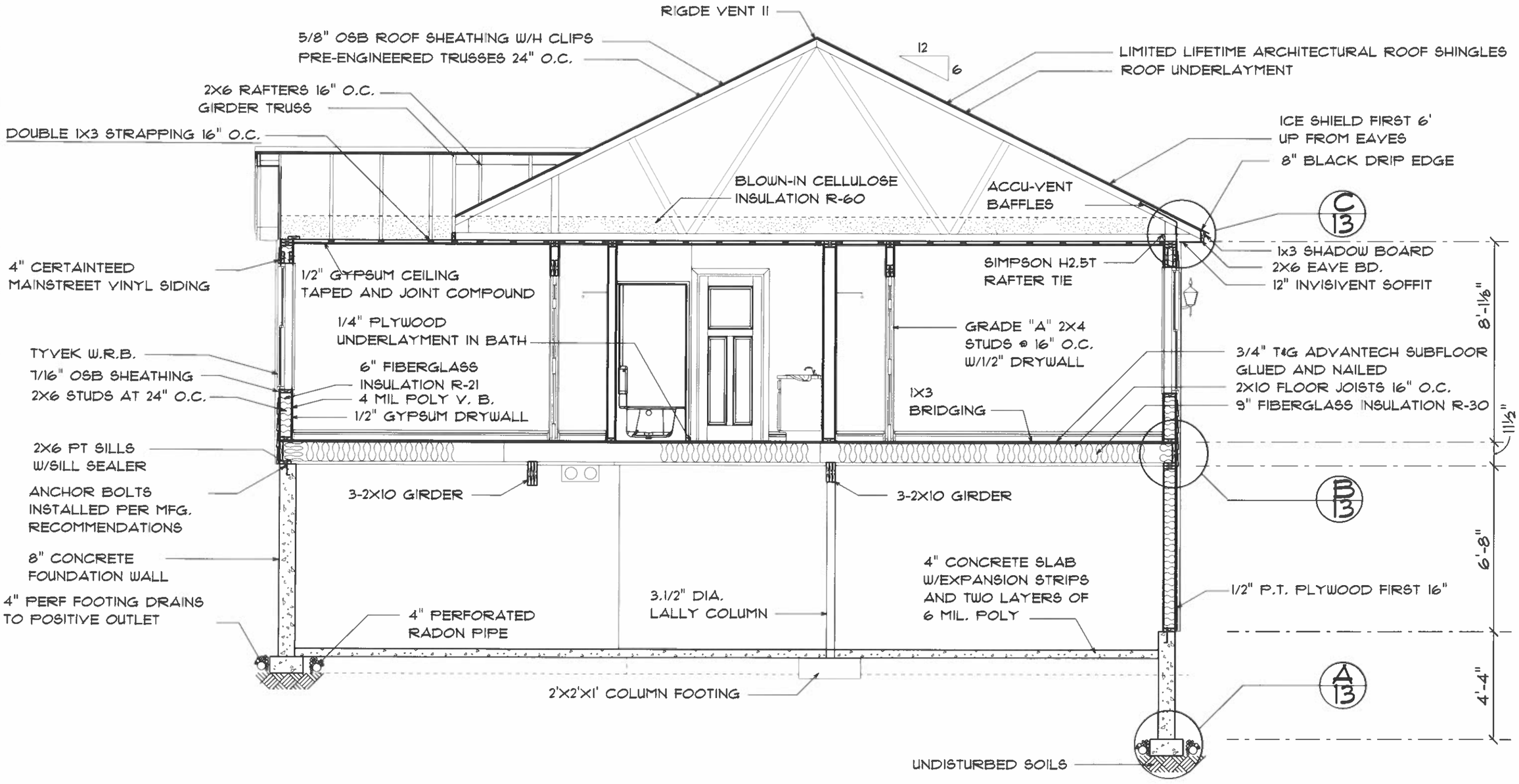

CROSS SECTION A COM BDRMS

SCALE: 1/4" = 1'-0"

THESE DRAWINGS HAVE BEEN DEVELOPED BY PATCO CONSTRUCTION INC. FOR THE TITLED SET ONLY, THE DRAWINGS ARE THE SOLE PROPERTY OF PATCO CONSTRUCTION INC. AND THEY SHALL NOT BE USED, LENT, ALTERED, OR REPRODUCED WITHOUT WRITTEN CONSENT OF PATCO CONSTRUCTION.

PATCO CONSTRUCTION, INC.
1293 MAINE ST. SANFORD, ME. 04073 - (207)324-5574 FAX (207)324-1643
Copyright © 2003 PATCO Construction, Inc. All Rights Reserved.

PATCO SPEC
LOT 16 ROLLING WOODS LN, Wells, ME
CRANDALL II 1413 SQ FT

CONTRACT DATE: 4/7/2026
SCALE: AS SHOWN
DRAWN BY: AMS
JOB NO.:
REVISED: 4/8/2026
SHEET: 9 OF 20

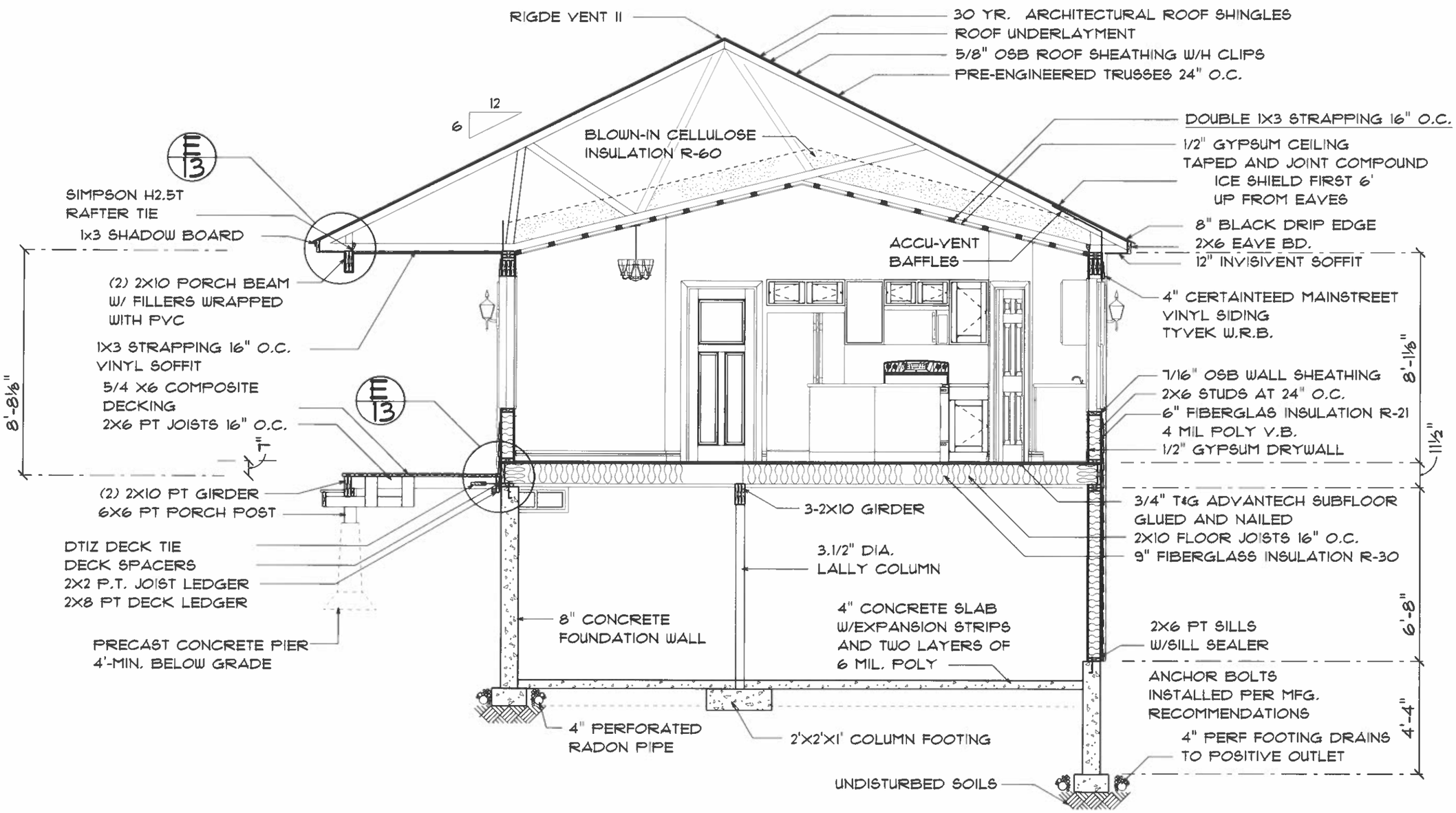

CROSS SECTION B

SCALE: 1/4" = 1'-0"

THESE DRAWINGS HAVE BEEN DEVELOPED BY PATCO CONSTRUCTION INC. FOR THE TITLED SET ONLY. THE DRAWINGS ARE THE SOLE PROPERTY OF PATCO CONSTRUCTION INC. AND THEY SHALL NOT BE USED, LENT, ALTERED, OR REPRODUCED WITHOUT WRITTEN CONSENT OF PATCO CONSTRUCTION.

PATCO CONSTRUCTION, INC.
1293 MAINE ST. SANFORD, ME. 04073 - (207)324-5574 FAX (207)324-1643
Copyright © 2003 PATCO Construction, Inc. All Rights Reserved.

PATCO SPEC
LOT 16 ROLLING WOODS LN, Wells, ME
CRANDALL II 1413 SQ FT

CONTRACT DATE: 4/7/2026
SCALE: AS SHOWN
DRAWN BY: AMS
JOB NO.:
REVISED: 4/8/2026
SHEET: 10 OF 20

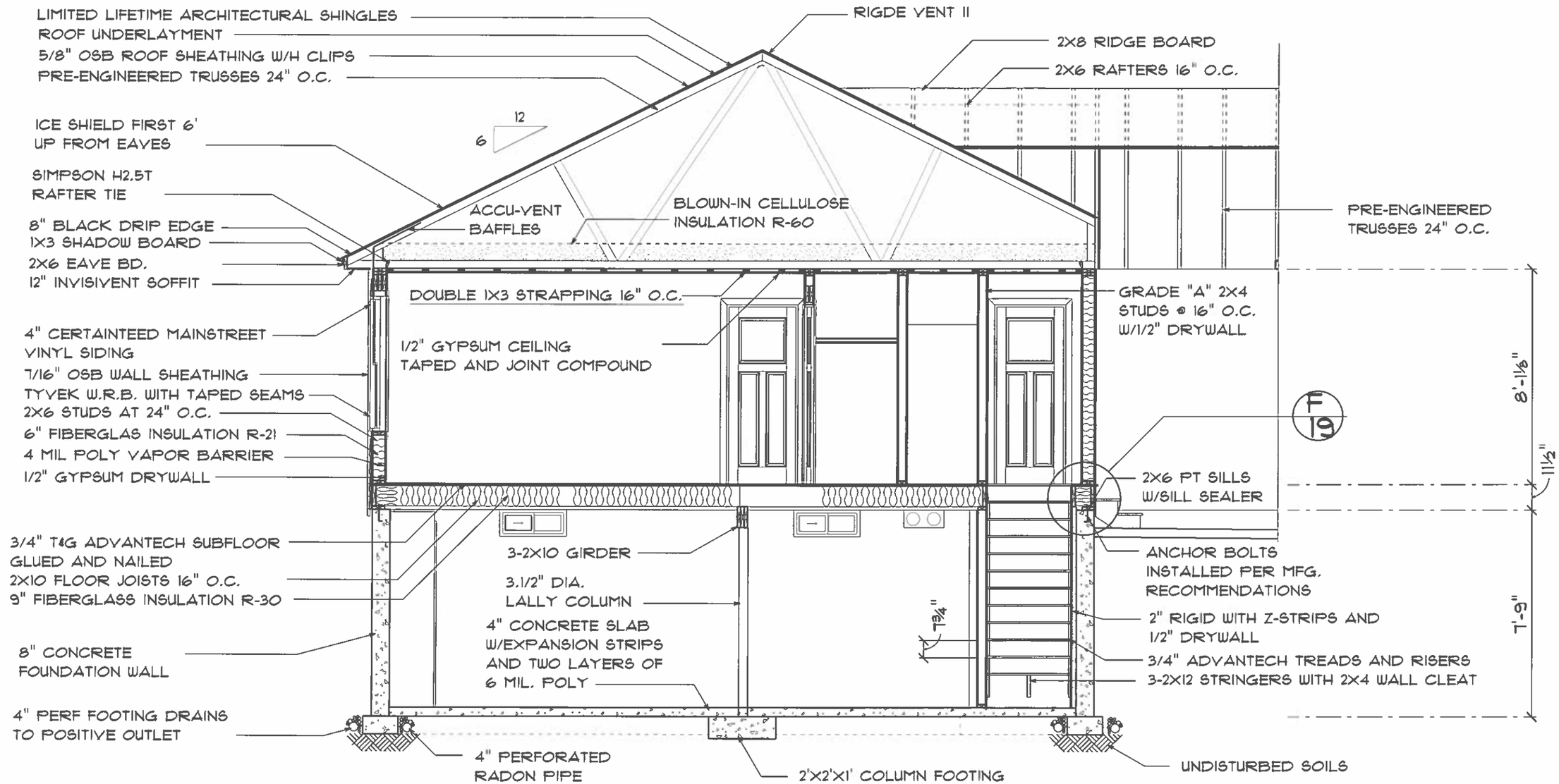

CROSS SECTION C

SCALE: 1/4" = 1'-0"

THESE DRAWINGS HAVE BEEN DEVELOPED BY PATCO CONSTRUCTION INC. FOR THE TITLED SET ONLY, THE DRAWINGS ARE THE SOLE PROPERTY OF PATCO CONSTRUCTION INC. AND THEY SHALL NOT BE USED, LENT, ALTERED, OR REPRODUCED WITHOUT WRITTEN CONSENT OF PATCO CONSTRUCTION.

PATCO
CONSTRUCTION, INC.
1293 MAINE ST. SANFORD, ME. 04073 - (207)324-5574 FAX (207)324-1643
Copyright © 2003 PATCO Construction, Inc. All Rights Reserved.

PATCO SPEC
LOT 16 ROLLING WOODS LN, Wells, ME
CRANDALL II 1413 SQ FT

CONTRACT DATE: 4/7/2026
SCALE: AS SHOWN
DRAWN BY: AMS
JOB NO.:
REVISED: 4/8/2026
SHEET: 11 OF 20

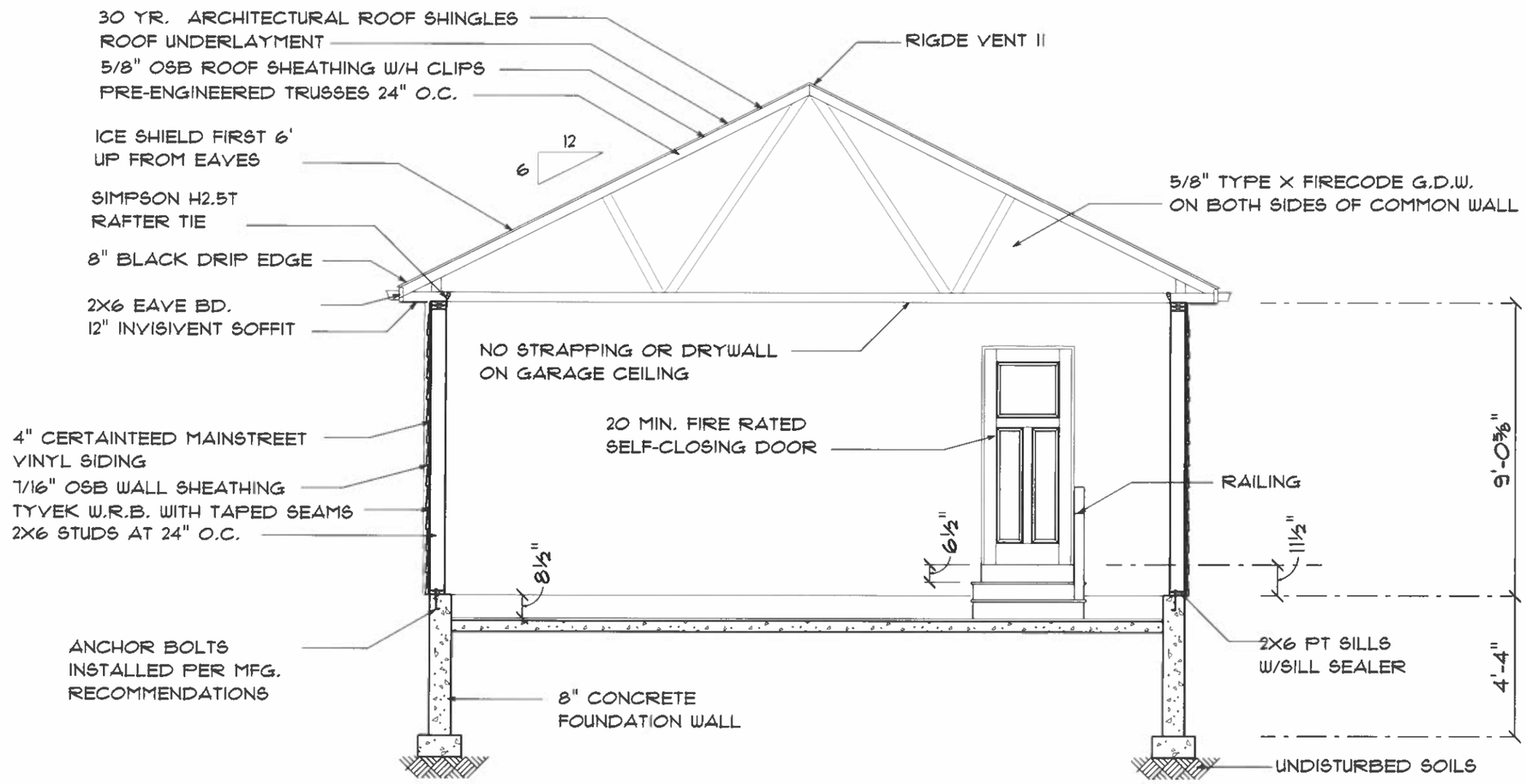

CROSS SECTION D GARAGE

SCALE: 1/4" = 1'-0"

PATCO CONSTRUCTION, INC.
1293 MAINE ST. SANFORD, ME. 04073 - (207)324-5574 FAX (207)324-1643
Copyright © 2003 PATCO Construction, Inc. All Rights Reserved.

PATCO SPEC
LOT 16 ROLLING WOODS LN, Wells, ME
CRANDALL II 1413 SQ FT

CONTRACT DATE: 4/7/2026
SCALE: AS SHOWN
DRAWN BY: AMS
JOB NO.:
REVISED: 4/8/2026
SHEET: 12 OF 20

THESE DRAWINGS HAVE BEEN DEVELOPED BY PATCO CONSTRUCTION INC. FOR THE TITLED SET ONLY, THE DRAWINGS ARE THE SOLE PROPERTY OF PATCO CONSTRUCTION INC. AND THEY SHALL NOT BE USED, LENT, ALTERED, OR REPRODUCED WITHOUT WRITTEN CONSENT OF PATCO CONSTRUCTION.

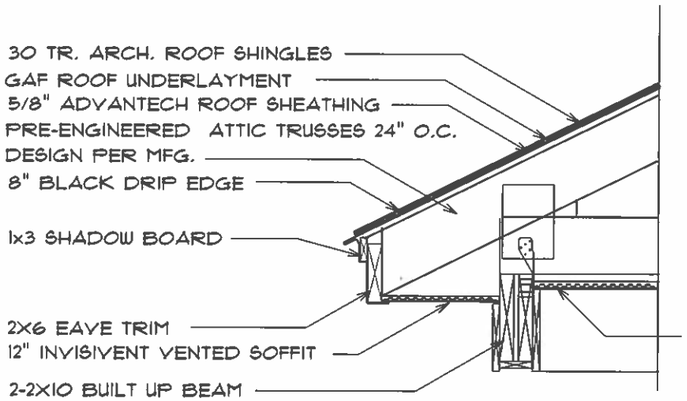

DO NOT INSTALL STANDARD 1X3 SHADOW BOARD ON FACSIA

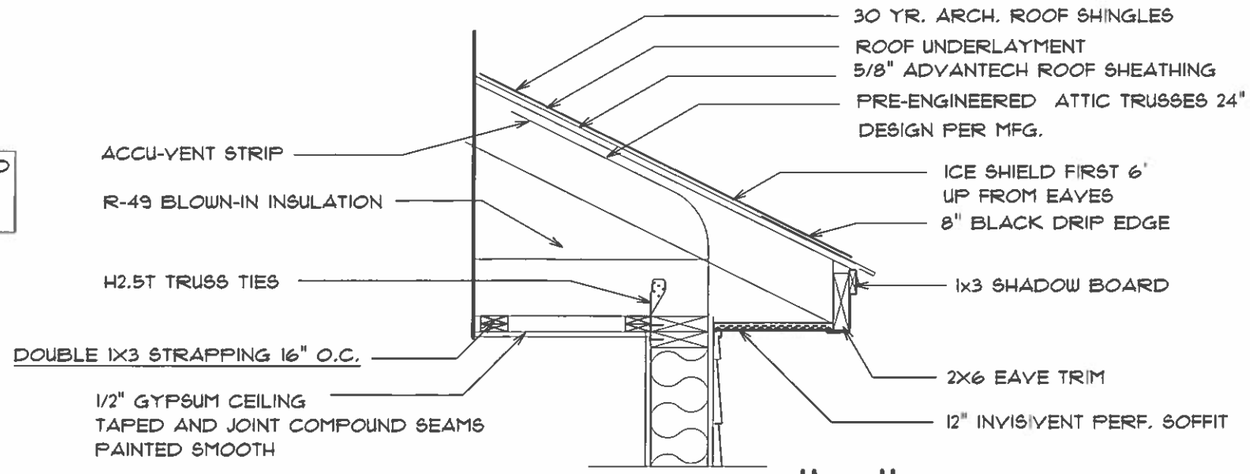

DETAIL "C"

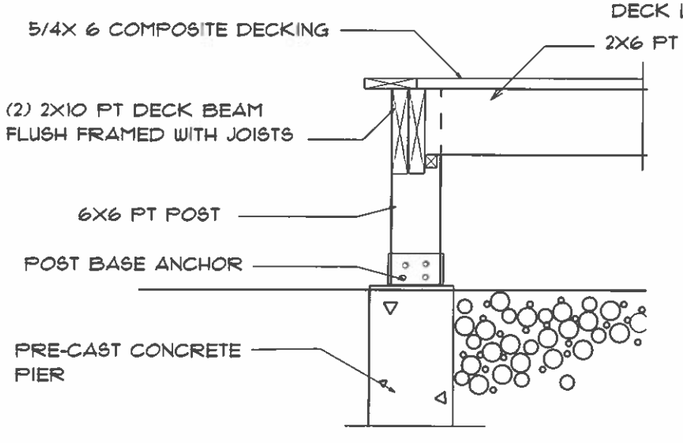

DETAIL "E"

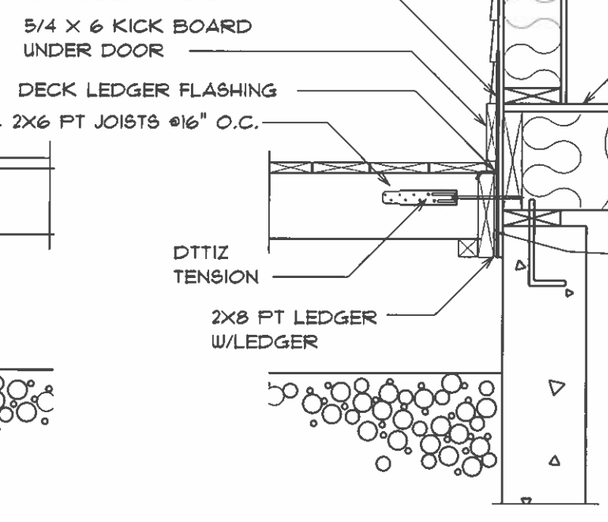

DETAIL "D"

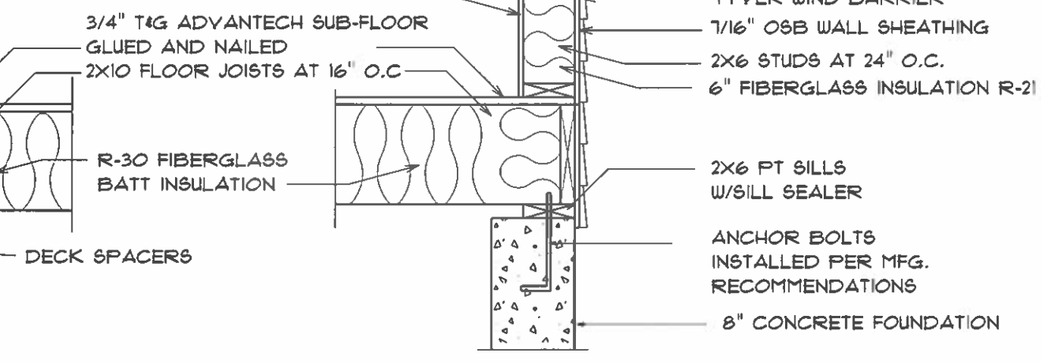

DETAIL "B"

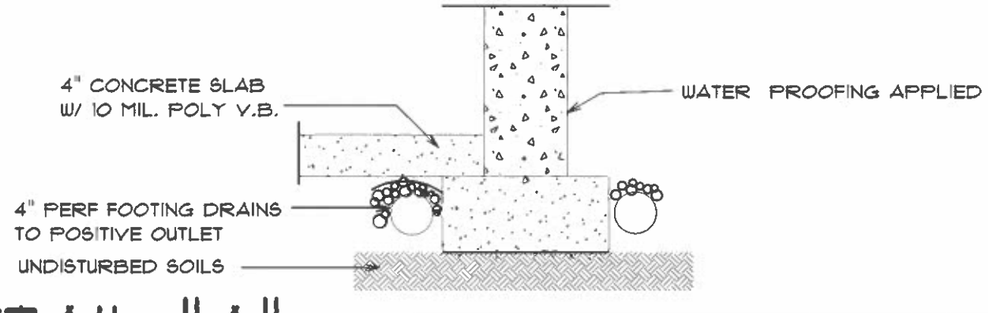

DETAIL "A"

WALL DETAILS

SCALE: 3/4" = 1'-0"

THESE DRAWINGS HAVE BEEN DEVELOPED BY PATCO CONSTRUCTION INC. FOR THE TITLED SET ONLY, THE DRAWINGS ARE THE SOLE PROPERTY OF PATCO CONSTRUCTION INC. AND THEY SHALL NOT BE USED, LENT, ALTERED, OR REPRODUCED WITHOUT WRITTEN CONSENT OF PATCO CONSTRUCTION.

PATCO CONSTRUCTION, INC.
1293 MAINE ST. SANFORD, ME. 04073 - (207)324-5574 FAX (207)324-1643
Copyright © 2003 PATCO Construction, Inc. All Rights Reserved.

PATCO SPEC
LOT 16 ROLLING WOODS LN, Wells, ME
CRANDALL II 1413 SQ FT

CONTRACT DATE: 4/1/2026
SCALE: AS SHOWN
DRAWN BY: AMS
JOB NO.:
REVISED: 4/9/2026
SHEET: 13 OF 20

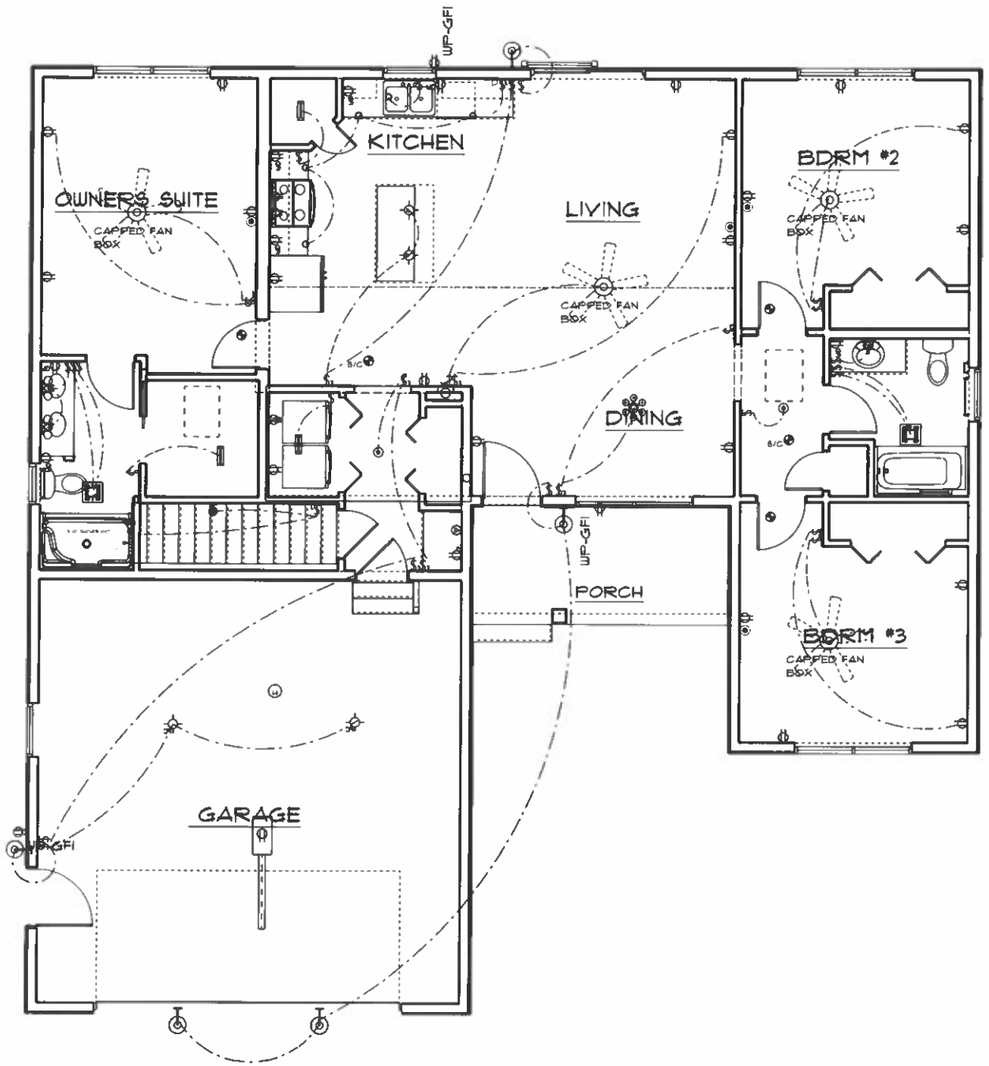

ELECTRICAL LEGEND	
ELECTRICAL	SYMBOL
4 RECESSED LIGHT	
BATH FAN MOTION	
CABLE TV	
CAPPED FAN	CAPPED FAN BOX
chandelier	
CLOSET FLOURESCENT	
DOUBLE OUTLET	
Garage Door Opener	
HALL- KITCHEN LIGHT	
HEAT DETECTOR	H
Keyless light	
LIGHT PENDANT	
outlet	
outlet 220v	
outlet gfi	
pull chain light	PC
SMOKE CARBON COMBO	S/C
smoke detector	
switch	$
switch 3 way	$3
SWITCH DIMMER	$D
SWITCH DUAL CONTROLS	$DC
SWITCH DUAL CONTROLS	$DC
SWITCH W TIMER	$T
TELEPHONE	
VANITY LIGHT	
wall mount savoy	
wall mounted 03 i light	
WP GFI	WP-GFI

MAIN FLOOR - ELECTRICAL

SCALE: 1/8" = 1'-0"

THESE DRAWINGS HAVE BEEN DEVELOPED BY PATCO CONSTRUCTION INC. FOR THE TITLED SET ONLY, THE DRAWINGS ARE THE SOLE PROPERTY OF PATCO CONSTRUCTION INC. AND THEY SHALL NOT BE USED, LENT, ALTERED, OR REPRODUCED WITHOUT WRITTEN CONSENT OF PATCO CONSTRUCTION.

PATCO CONSTRUCTION, INC.
1293 MAINE ST. SANFORD, ME. 04073 - 12071324-5574 FAX 12071324-1643
Copyright © 2003 PATCO Construction, Inc. All Rights Reserved.

PATCO SPEC
LOT 16 ROLLING WOODS LN, Wells, ME
CRANDALL II 1413 SQ FT

CONTRACT DATE: 4/7/2026
SCALE: AS SHOWN
DRAWN BY: AMS
JOB NO.:
REVISED: 4/9/2026
SHEET: 14 OF 20

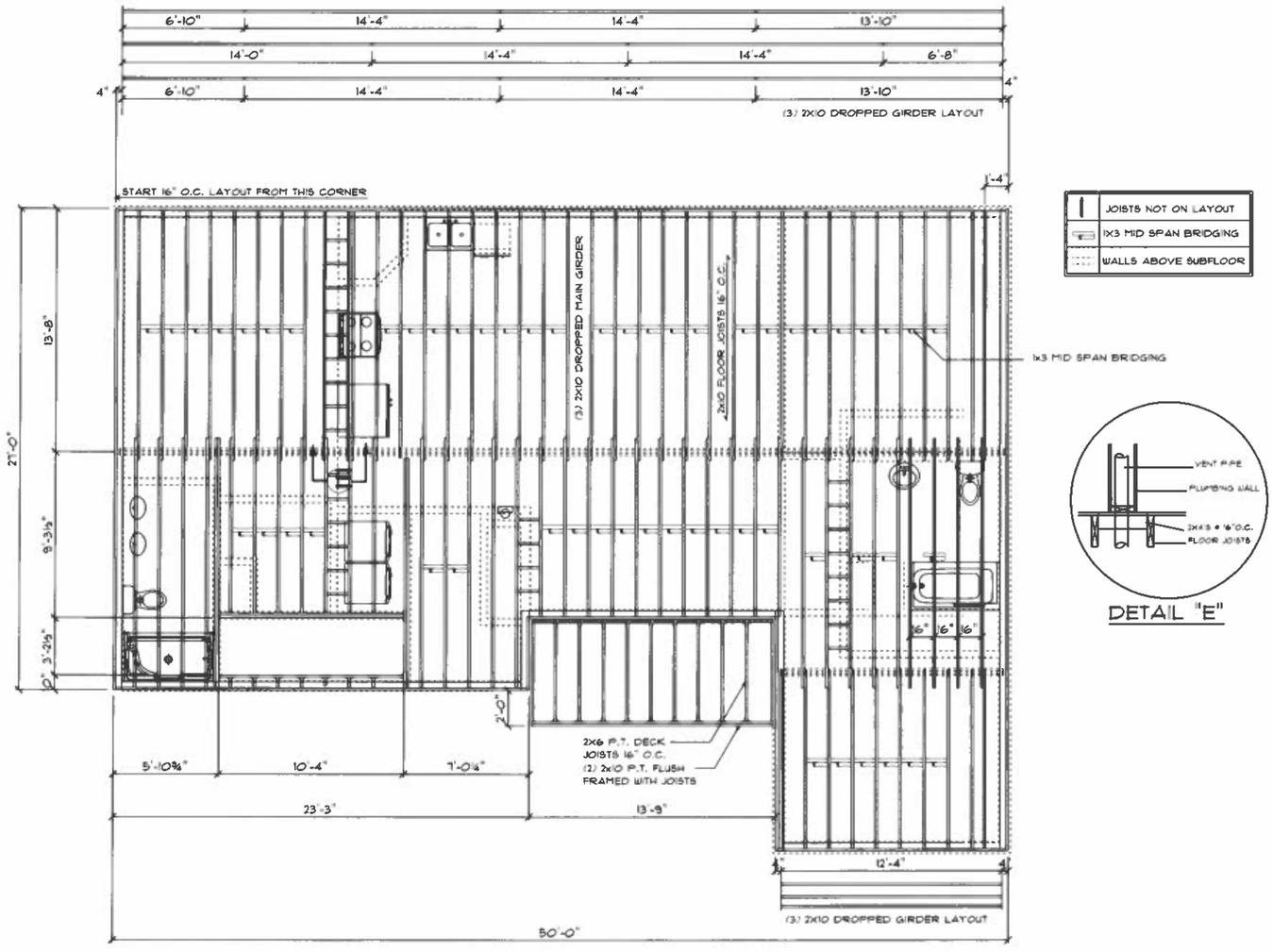

FLOOR FRAME

SCALE: 1/8" = 1'-0"

THESE DRAWINGS HAVE BEEN DEVELOPED BY PATCO CONSTRUCTION INC. FOR THE TITLED SET ONLY, THE DRAWINGS ARE THE SOLE PROPERTY OF PATCO CONSTRUCTION INC. AND THEY SHALL NOT BE USED, LENT, ALTERED, OR REPRODUCED WITHOUT WRITTEN CONSENT OF PATCO CONSTRUCTION.

PATCO CONSTRUCTION, INC.
1293 MAINE ST. SANFORD, ME. 04073 - (207)324-5574 FAX (207)324-1643
Copyright © 2003 PATCO Construction, Inc. All Rights Reserved.

PATCO SPEC
LOT 16 ROLLING WOODS LN, Wells, ME
CRANDALL II 1413 SQ FT

CONTRACT DATE: 4/7/2026
SCALE: AS SHOWN
DRAWN BY: AMS
JOB NO.:
REVISED: 4/9/2026
SHEET: 15 OF 20

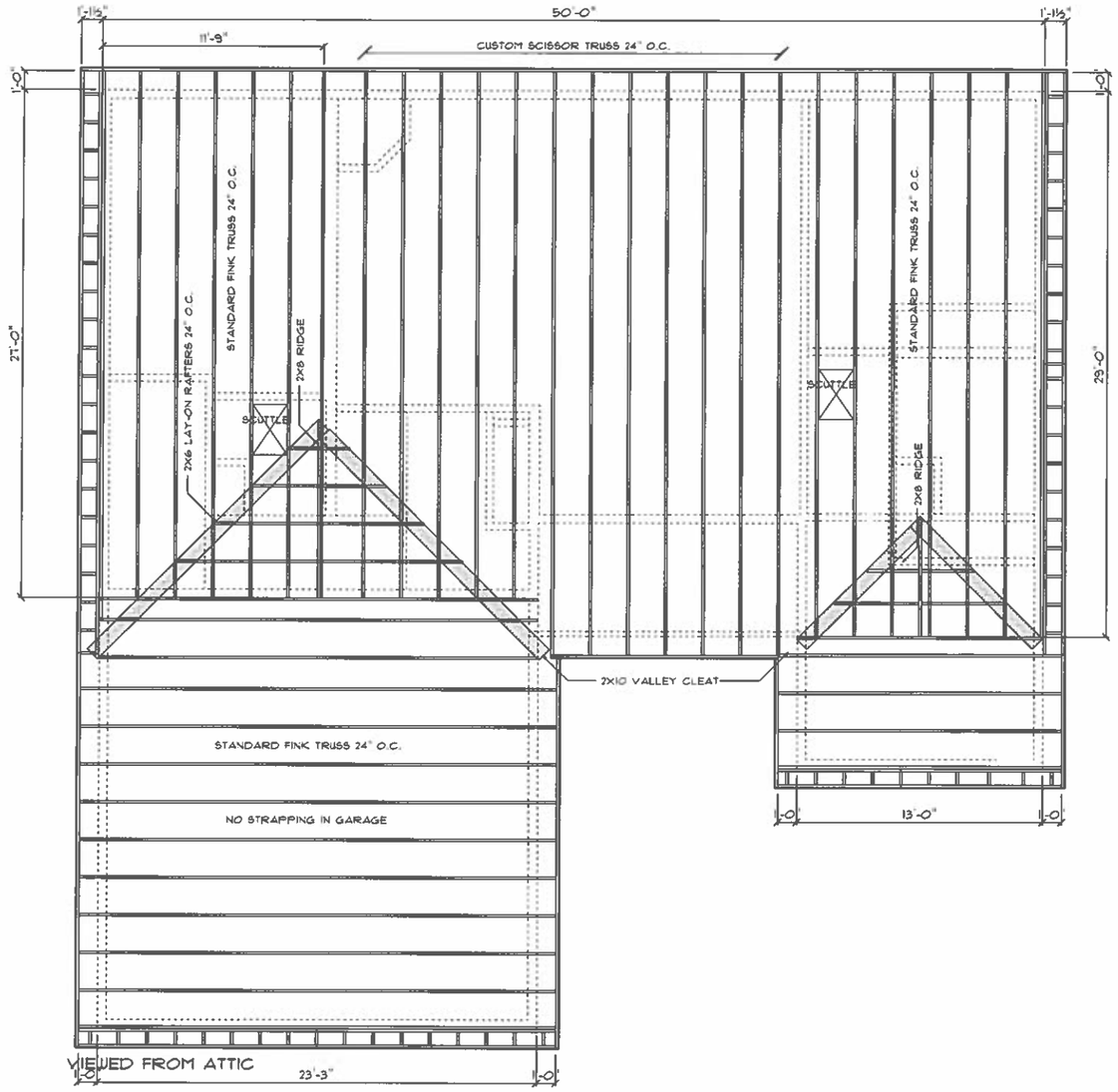

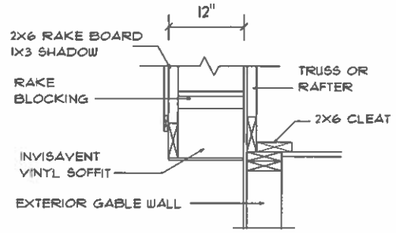

TYP. RAKE

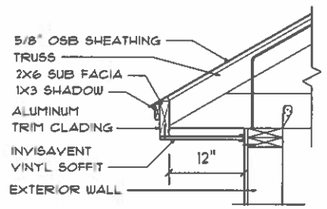

TYP. EAVE

SCALE: 1/2" = 1'-0"

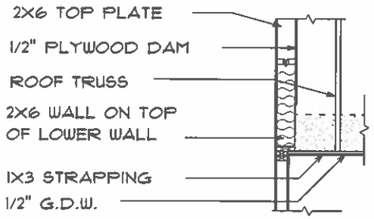

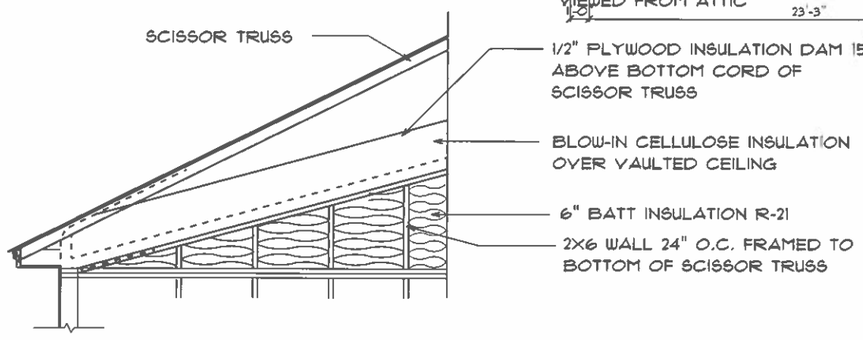

INSULATIONED INTERIOR GABLE DETAIL

ROOF FRAME

SCALE: 1/8" = 1'-0"

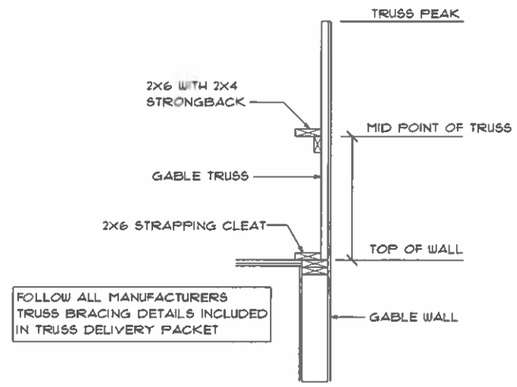

GABLE STRONGBACK

SCALE: 3/8" = 1'-0"

THESE DRAWINGS HAVE BEEN DEVELOPED BY PATCO CONSTRUCTION INC. FOR THE TITLED SET ONLY, THE DRAWINGS ARE THE SOLE PROPERTY OF PATCO CONSTRUCTION INC. AND THEY SHALL NOT BE USED, LENT, ALTERED, OR REPRODUCED WITHOUT WRITTEN CONSENT OF PATCO CONSTRUCTION.

PATCO
CONSTRUCTION, INC.
1293 MAINE ST. SANFORD, ME. 04073 - (207)324-5574 FAX (207)324-1643
Copyright © 2003 PATCO Construction, Inc. All Rights Reserved.

PATCO SPEC
LOT 16 ROLLING WOODS LN, Wells, ME
CRANDALL II 1413 SQ FT

CONTRACT DATE: 4/7/2026
SCALE: AS SHOWN
DRAWN BY: AMS
JOB NO.:
REVISED: 4/8/2026
SHEET: 16 OF 20

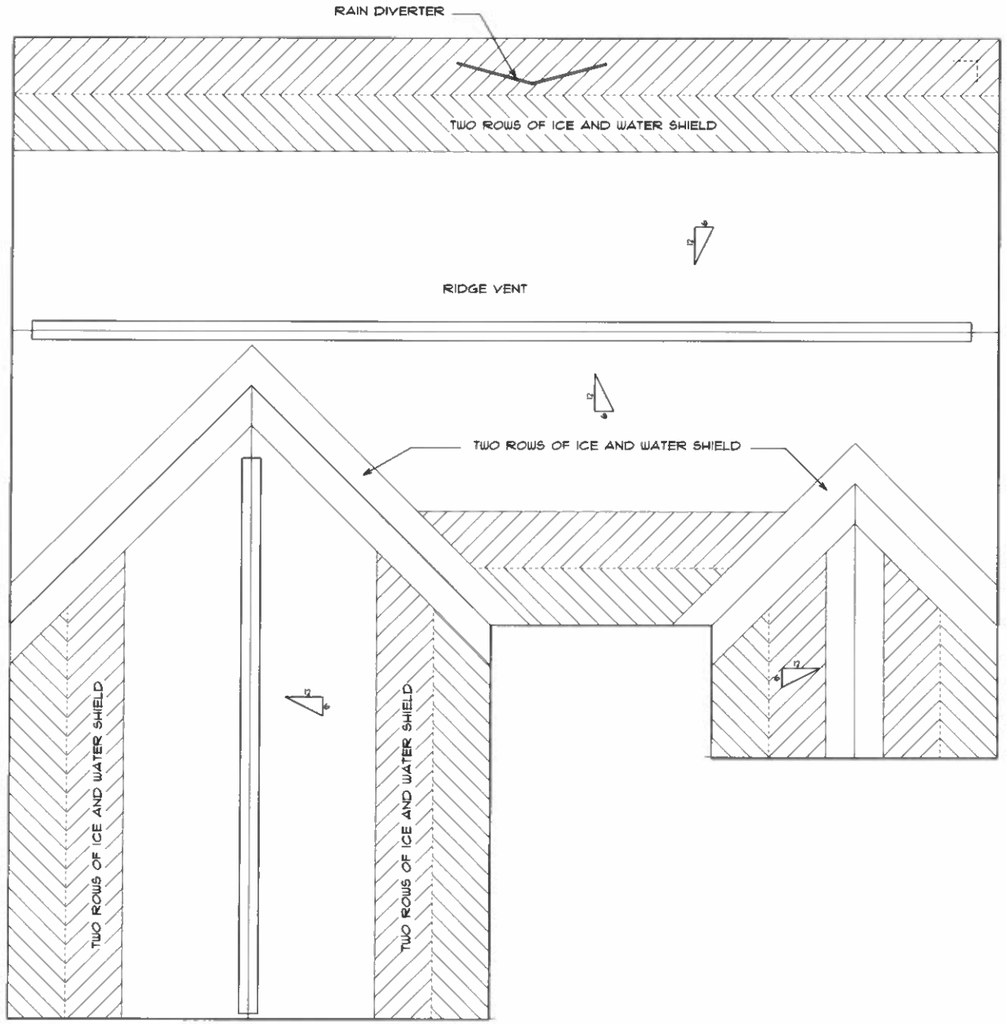

ROOF PLAN

SCALE: 1/8" = 1'-0"

THESE DRAWINGS HAVE BEEN DEVELOPED BY PATCO CONSTRUCTION INC. FOR THE TITLED SET ONLY, THE DRAWINGS ARE THE SOLE PROPERTY OF PATCO CONSTRUCTION INC. AND THEY SHALL NOT BE USED, LENT, ALTERED, OR REPRODUCED WITHOUT WRITTEN CONSENT OF PATCO CONSTRUCTION.

PATCO CONSTRUCTION, INC.
1293 MAINE ST. SANFORD, ME. 04073 - (207)324-5574 FAX (207)324-1643
Copyright © 2003 PATCO Construction, Inc. All Rights Reserved.

PATCO SPEC
LOT 16 ROLLING WOODS LN, Wells, ME
CRANDALL II 1413 SQ FT

CONTRACT DATE: 4/7/2026
SCALE: AS SHOWN
DRAWN BY: AMS
JOB NO.:
REVISED: 4/8/2026
SHEET: 17 OF 20

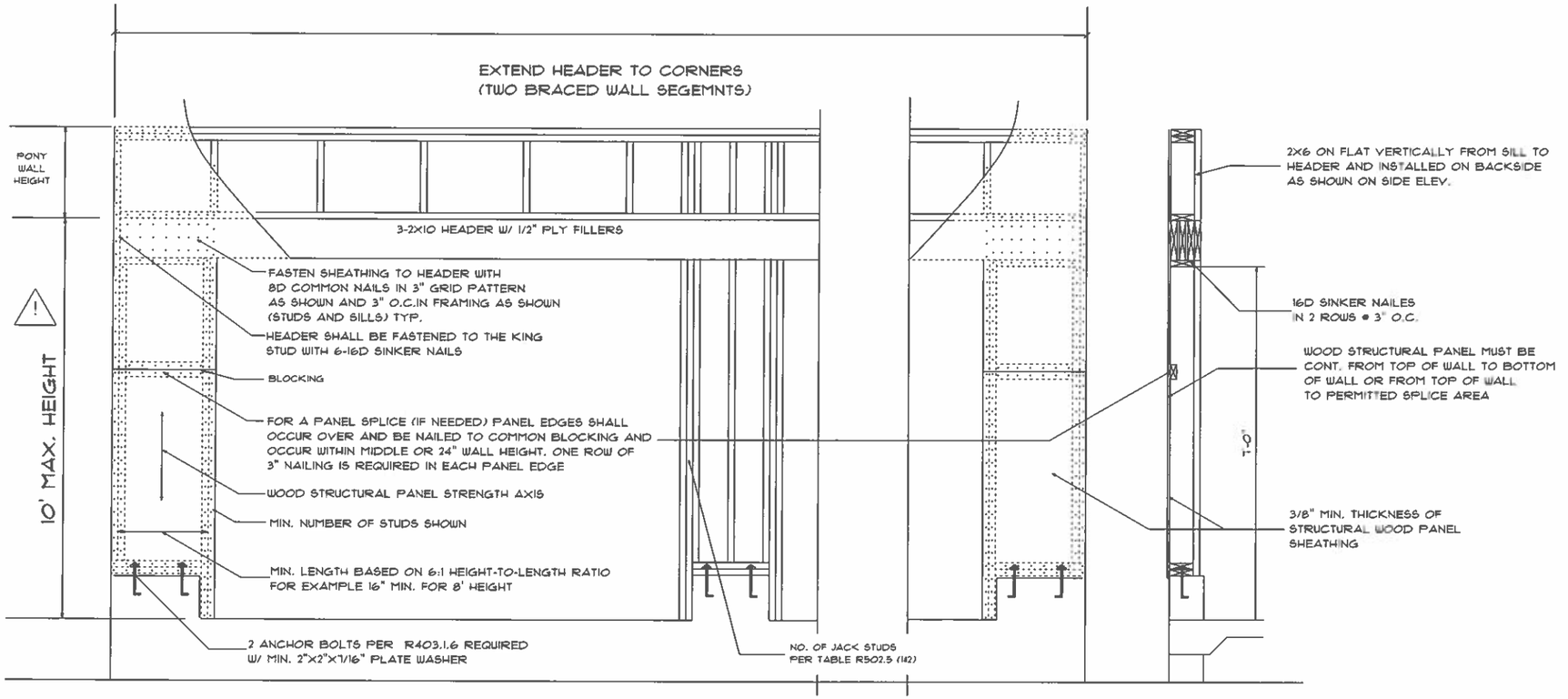

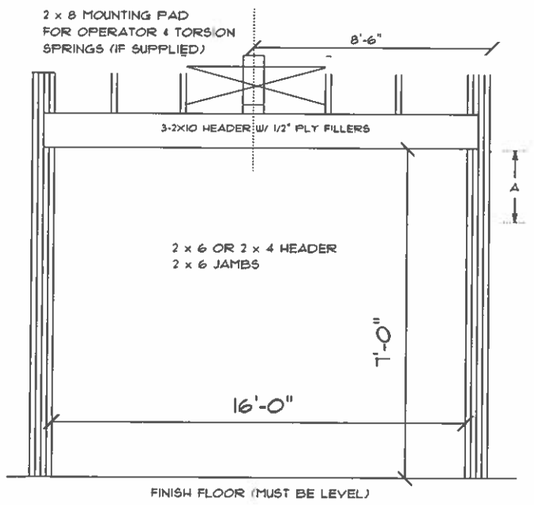

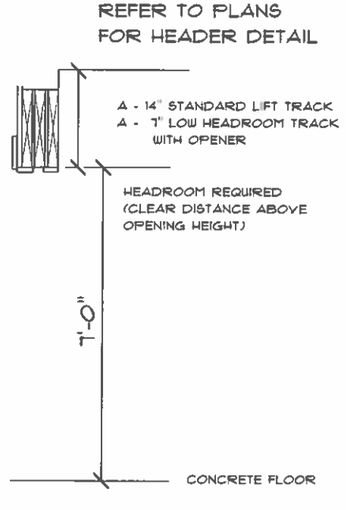

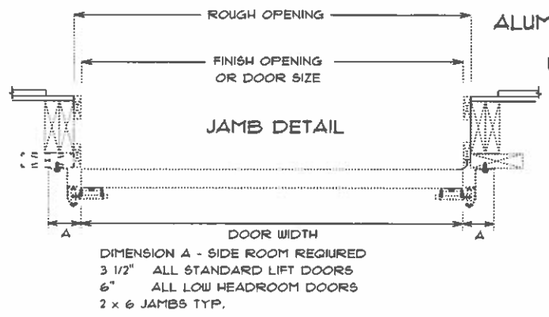

OVERHEAD DOOR OPENING DETAIL
N.T.S.

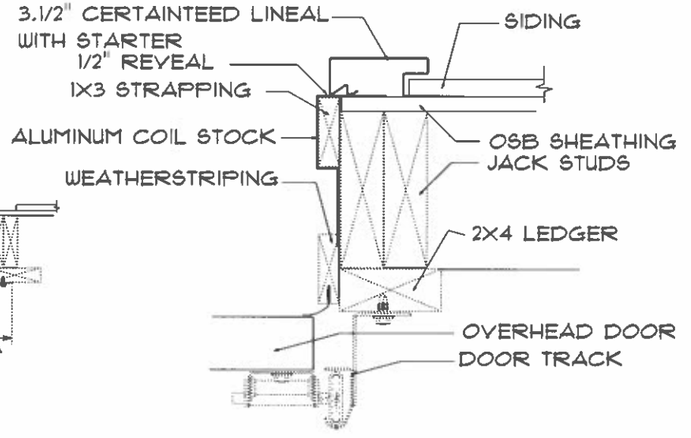

ALUMINUM WRAP DETAIL

SHEAR WALL

THESE DRAWINGS HAVE BEEN DEVELOPED BY PATCO CONSTRUCTION INC. FOR THE TITLED SET ONLY, THE DRAWINGS ARE THE SOLE PROPERTY OF PATCO CONSTRUCTION INC. AND THEY SHALL NOT BE USED, LENT, ALTERED, OR REPRODUCED WITHOUT WRITTEN CONSENT OF PATCO CONSTRUCTION.

PATCO CONSTRUCTION, INC.
1293 MAINE ST. SANFORD, ME. 04073 - (207)324-5574 FAX (207)324-1643
Copyright © 2003 PATCO Construction, Inc. All Rights Reserved.

PATCO SPEC
LOT 16 ROLLING WOODS LN, Wells, ME
CRANDALL II 1413 SQ FT

CONTRACT DATE: 4/7/2026
SCALE: AS SHOWN
DRAWN BY: AMS
JOB NO.:
REVISED: 4/8/2026
SHEET: 18 OF 20

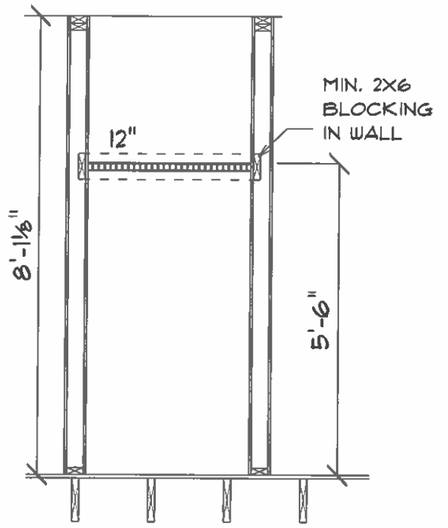

STANDARD CLOSET

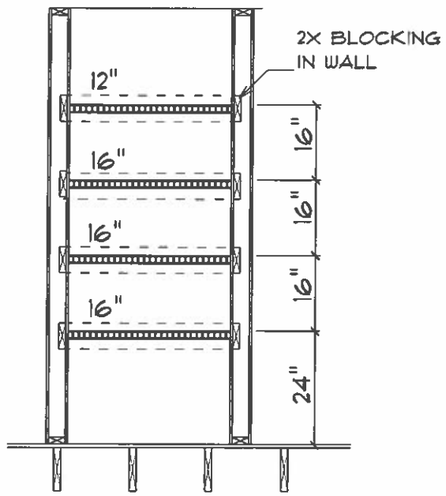

LINEN / PANTRY CLOSET

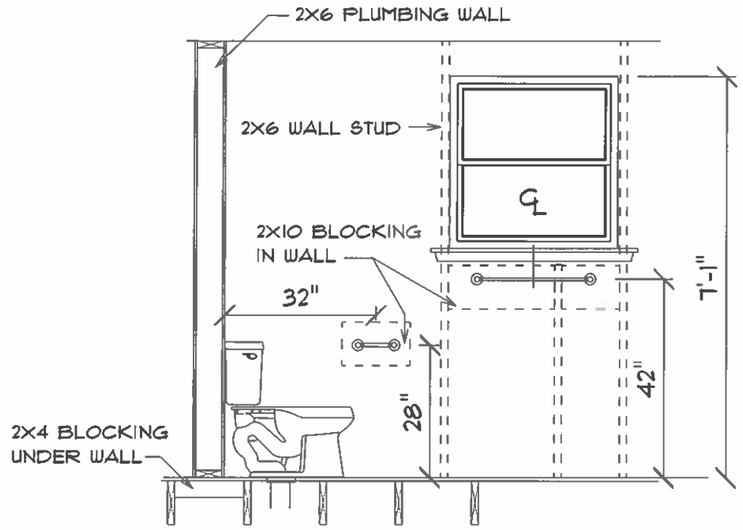

BATH ACCESSORIES

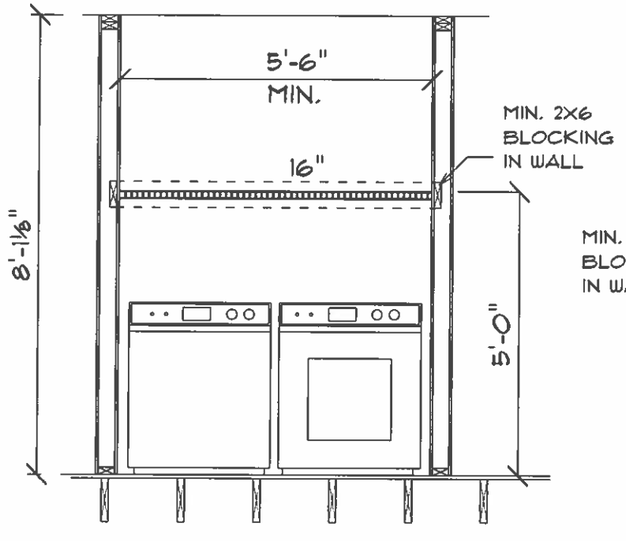

LAUNDRY CLOSET

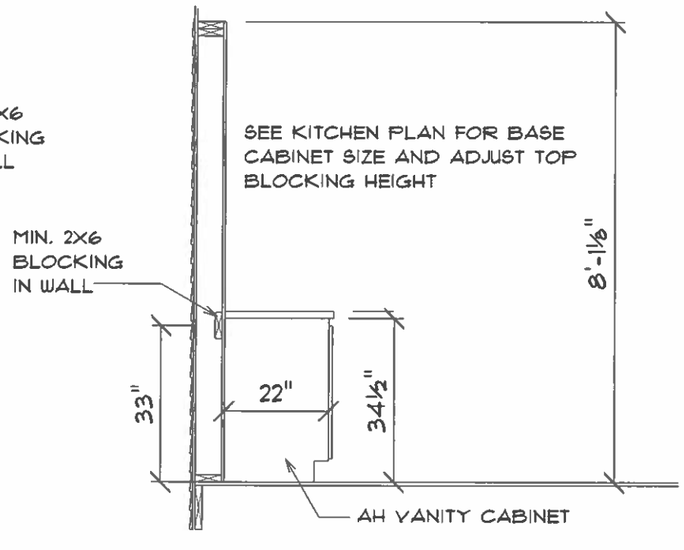

TYP. VANITY BLOCKING

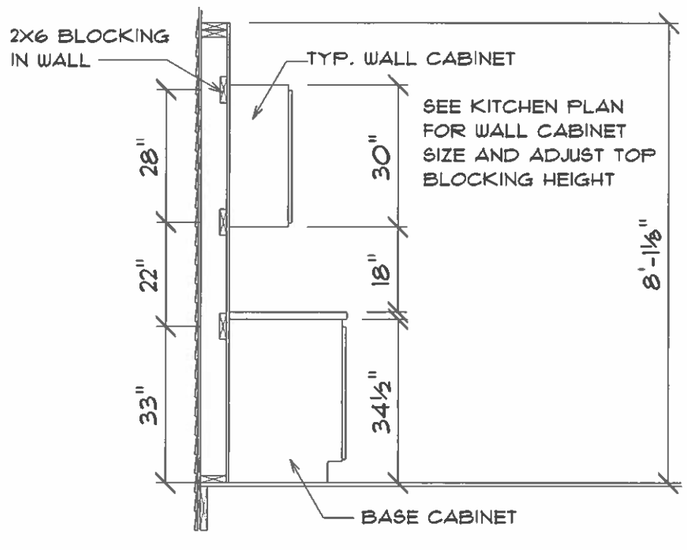

TYP. KITCHEN BLOCKING

SHELF AND BLOCKING

SCALE: 3/8" = 1'-0"

THESE DRAWINGS HAVE BEEN DEVELOPED BY PATCO CONSTRUCTION INC. FOR THE TITLED SET ONLY, THE DRAWINGS ARE THE SOLE PROPERTY OF PATCO CONSTRUCTION INC. AND THEY SHALL NOT BE USED, LENT, ALTERED, OR REPRODUCED WITHOUT WRITTEN CONSENT OF PATCO CONSTRUCTION.

PATCO CONSTRUCTION, INC.
1293 MAINE ST. SANFORD, ME. 04073 - (207)324-5574 FAX (207)324-1643
Copyright © 2003 PATCO Construction, Inc. All Rights Reserved.

PATCO SPEC
LOT 16 ROLLING WOODS LN, Wells, ME
CRANDALL II 1413 SQ FT

CONTRACT DATE: 4/1/2026
SCALE: AS SHOWN
DRAWN BY: AMS
JOB NO.:
REVISED: 4/8/2026
SHEET: 19 OF 20

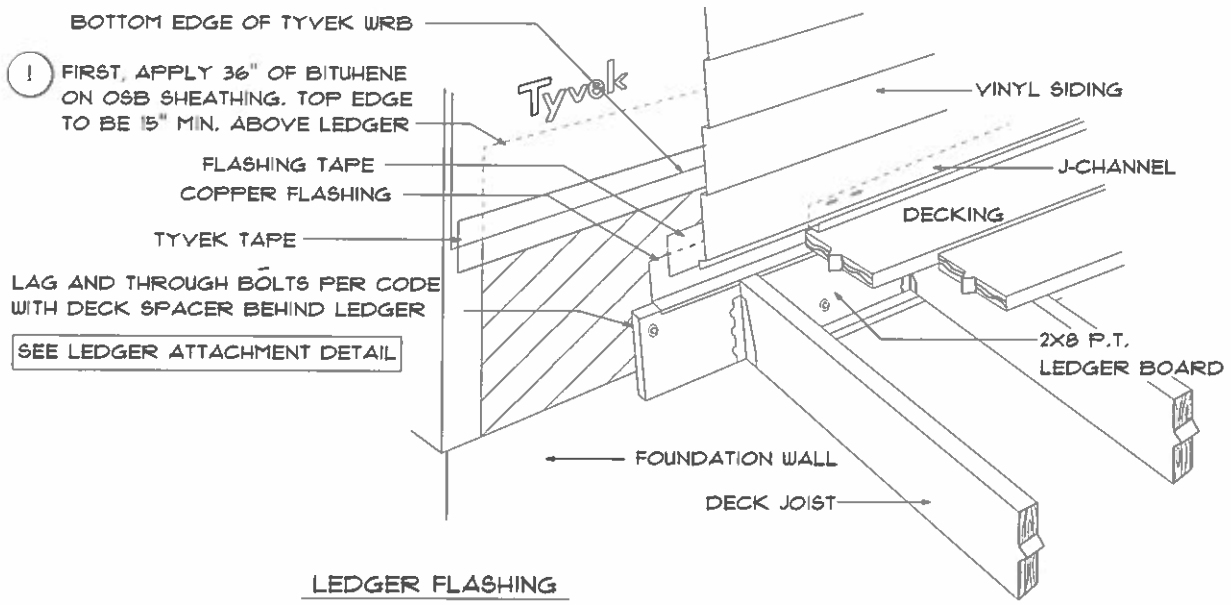

LEDGER FLASHING

N.T.S.

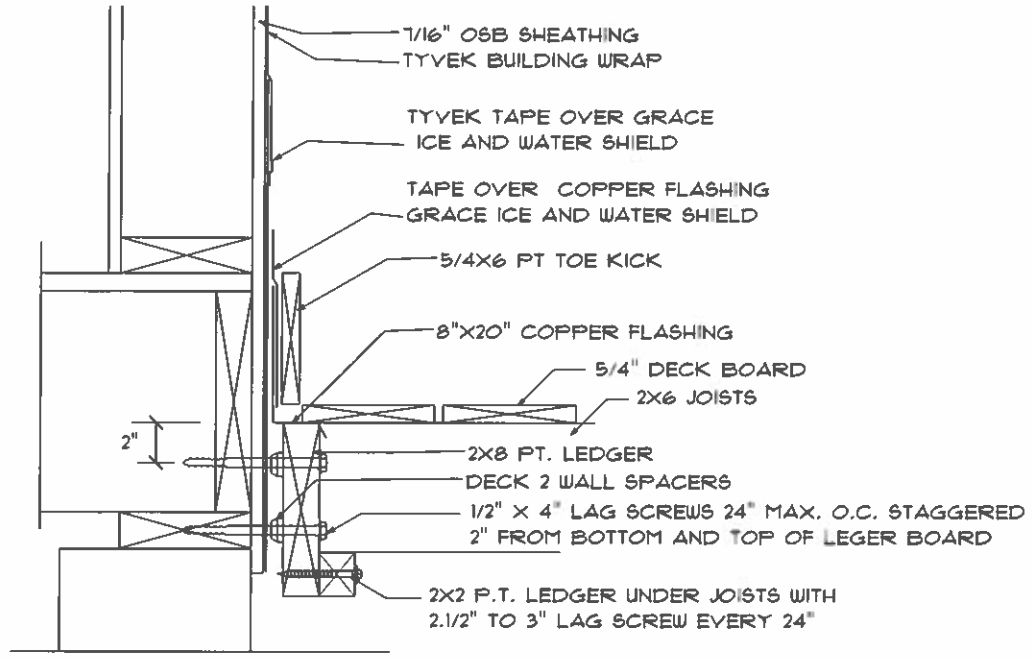

NAILER FLASHING DETAIL

NO SCALE

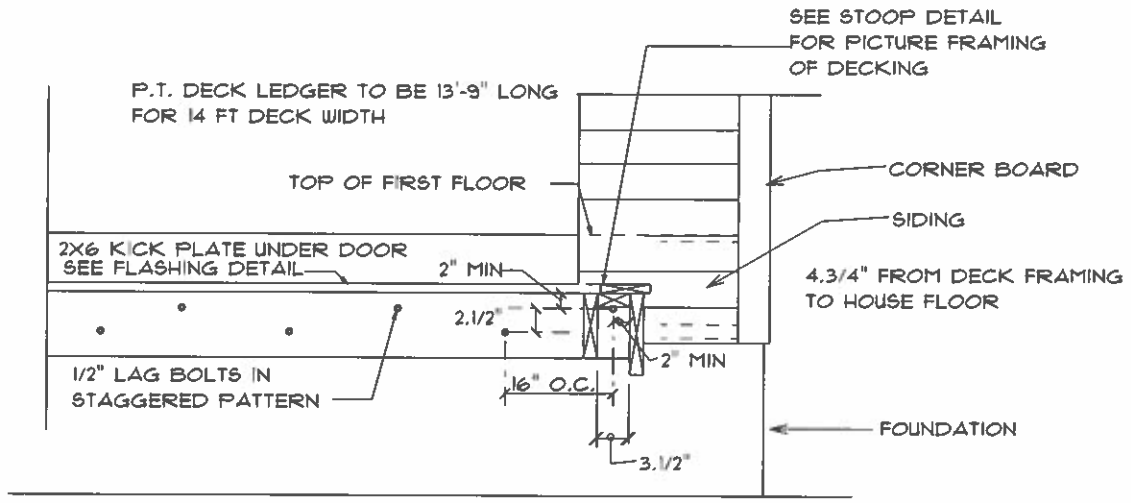

LEDGER DETAIL

NTS

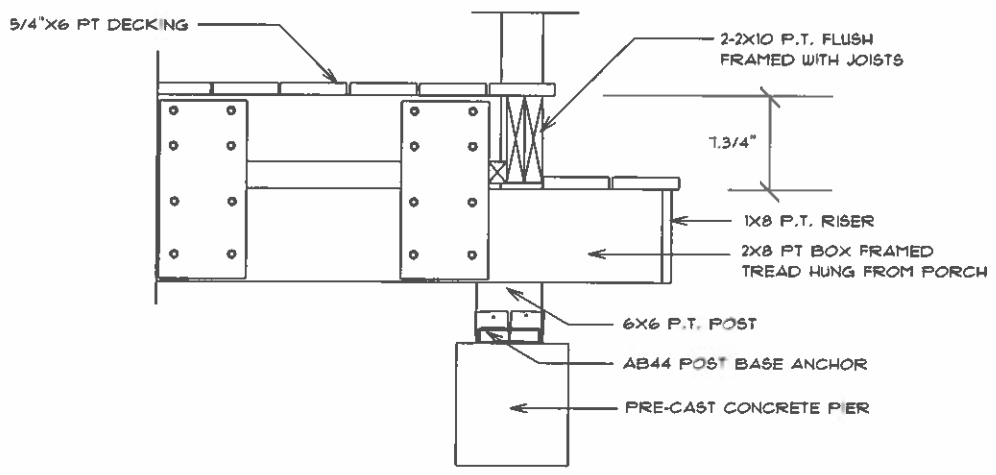

PORCH STAIR DETAIL

SCALE: 3/4" = 1'-0"

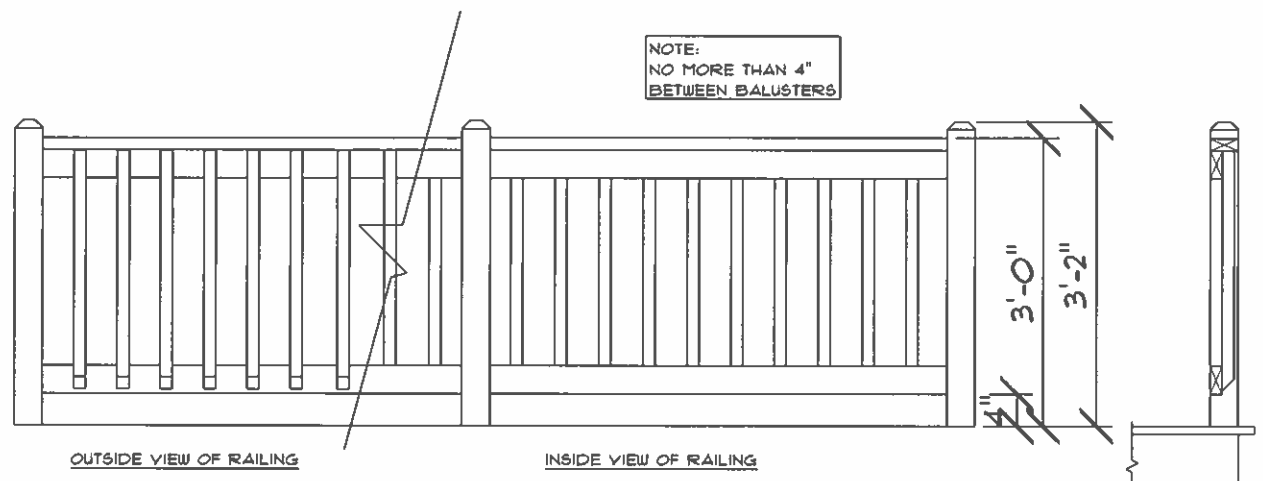

DECK RAILING ELEVATION

SCALE: 1/2" = 1'-0"

THESE DRAWINGS HAVE BEEN DEVELOPED BY PATCO CONSTRUCTION INC. FOR THE TITLED SET ONLY, THE DRAWINGS ARE THE SOLE PROPERTY OF PATCO CONSTRUCTION INC. AND THEY SHALL NOT BE USED, LENT, ALTERED, OR REPRODUCED WITHOUT WRITTEN CONSENT OF PATCO CONSTRUCTION.

PATCO CONSTRUCTION, INC.
1293 MAINE ST. SANFORD, ME. 04073 - (207)324-5574 FAX (207)324-1643
Copyright © 2003 PATCO Construction, Inc. All Rights Reserved.

PATCO SPEC

LOT 16 ROLLING WOODS LN, Wells, ME

CRANDALL II 1413 SQ FT

CONTRACT DATE: 4/1/2026
SCALE: AS SHOWN
DRAWN BY: AMS
JOB NO.:
REVISED: 4/8/2026
SHEET: 20 OF 20