3/144 98568

SUBSURFACE WASTEWATER DISPOSAL SYSTEM APPLICATION

Department of Human Services
Division of Health Engineering
(207) 287-5672 FAX (207) 287-4172

PROPERTY LOCATION

Town or Plantation	NORTH YARMOUTH
Street Subdivision Lot •	RAMI DRIVE LOT 4

PROPERTY OWNER'S NAME

Last: BUSQUE First: PETER	
Applicant's Name	
Mailing Address of Owner	P.O. BOX 377 WINDHAM, ME 04092
Daytime Tel. •	

Caution: Permit Required

The Subsurface Wastewater Disposal System shall not be installed until a Permit is attached here by the Local Plumbing Inspector. The Permit shall authorize the owner or installer to install the disposal system in accordance with this application and its

NORTH YARMOUTH 1380 TOWN COPY

Date Permit Issued: 12/1/98 $ 100.00 FEE ☐ If Double Fee Charged

Stanford Brown
Local Plumbing Inspector Signature

L.P.I. # 0089

Municipal Tax Map • _____ Lot • _____

Owner Statement

I state that the information submitted is correct to the best of my knowledge and understand that any falsification is reason for the Department and/or Local Plumbing Inspector to deny a permit

Signature of Owner/Applicant — Date: 12/0/98

Caution: Inspection Required

I have inspected the installation authorized above and found it to be in compliance with the Subsurface Wastewater Disposal Rules Application

Local Plumbing Inspector Signature — Date Approved

PERMIT INFORMATION

TYPE OF APPLICATION:

1. ☑ First Time System
2. ☐ Replacement System
   Type Replaced _____
   Year Installed _____
3. ☐ Expanded System
   ☐ a. one time exempted
   ☐ b. non exempted
4. ☐ Experimental System
5. ☐ Seasonal Conversion

THIS APPLICATION REQUIRES:

1. ☑ No Rule Variance
2. ☐ First Time System Variance
   ☐ a. Local Plumbing Inspector approval
   ☐ b. State & Local Plumbing Inspector approval
3. ☐ Replacement System Variance
   ☐ a. Local Plumbing Inspector approval
   ☐ b. State & Local Plumbing Inspector approval
4. ☐ Minimum Lot Size Variance
5. ☐ Seasonal Conversion Approval

DISPOSAL SYSTEM COMPONENT(S)

1. ☑ Non-Engineered System
2. ☐ Primitive System(graywater & alt toilet)
3. ☐ Alternative Toilet _____
4. ☐ Non-Engineered Treatment Tank
5. ☐ Holding Tank _____ Gallons
6. ☐ Non-Engineered Disposal Area (only)
7. ☐ Separated Laundry System
8. ☐ Engineered System (+2000 gpd)
9. ☐ Engineered Treatment Tank (only)
10. ☐ Engineered Disposal Area (only)
11. ☐ Pretreatment

SIZE OF PROPERTY

1.53 Acres

DISPOSAL SYSTEM TO SERVE:

1. ☑ Single Family Dwelling Unit
2. ☐ Multiple Family Dwelling: Number of Units _____
3. ☐ Other _____

SHORELAND ZONING

☐ Yes ☑ No

TYPE OF WATER SUPPLY

Drilled well

DESIGN DETAILS (SYSTEM LAYOUT SHOWN ON PAGE 3)

TREATMENT TANK

1. ☑ Concrete
   ☐ a. Regular
   ☐ b. Low Profile
2. ☐ Plastic
3. ☐ Other _____

SIZE 1000 Gallons

DISPOSAL AREA TYPE / SIZE

1. ☑ Bed 700 Sq. Ft.
2. ☐ Proprietary Device _____ Sq. Ft.
   ☐ Cluster ☐ Linear
   ☐ Regular ☐ H-20
3. ☐ Trench
4. ☐ Other _____

GARBAGE DISPOSAL UNIT

1. ☑ No
2. ☐ Yes
   ☐ Multi-compartment tank
   ☐ Tank in series
   ☐ Increase in tank capacity
   ☐ Filter on tank outlet

CRITERIA USED FOR DESIGN FLOW (Show Calculations)

3 Bedrooms
3 × 90

PROFILE & DESIGN CLASS

PROFILE	DESIGN
5	C

DEPTH TO MOST LIMITING FACTOR 24"

DISPOSAL AREA SIZING

1. ☐ Small - 2.00
2. ☑ Medium - 2.60
3. ☐ Medium-Large - 3.30
4. ☐ Large - 4.10
5. ☐ Extra-Large - 5.20

PUMPING

1. ☐ Not required
2. ☑ May be required
3. ☐ Required

DOSE _____ Gallons

DESIGN FLOW: 270 (Gallons/Day)

SITE EVALUATOR'S STATEMENT

On 10/30/98 (date) I completed a site evaluation on this property and state that the data reported is accurate and that the proposed sytem is in compliance with the Subsurface Wastewater Disposal Rules.

Marc D. Hamilton — Site Evaluator Signature

263 — SE •

10/30/98 — Date

MARC J. HAMILTON — Site Evaluator Name Printed

856-0277 — Telephone

98568

SUBSURFACE WASTEWATER DISPOSAL SYSTEM APPLICATION

Department of Human Services
Division of Health Engineering
(207) 287-5672 FAX (207) 287-4172

Town, City, Plantation: North Yarmouth | Street, Road, Subdivision: RANE DRIVE | Owner's Name: Peter Busque

SITE PLAN

Scale 1" = 100 Ft. or as shown

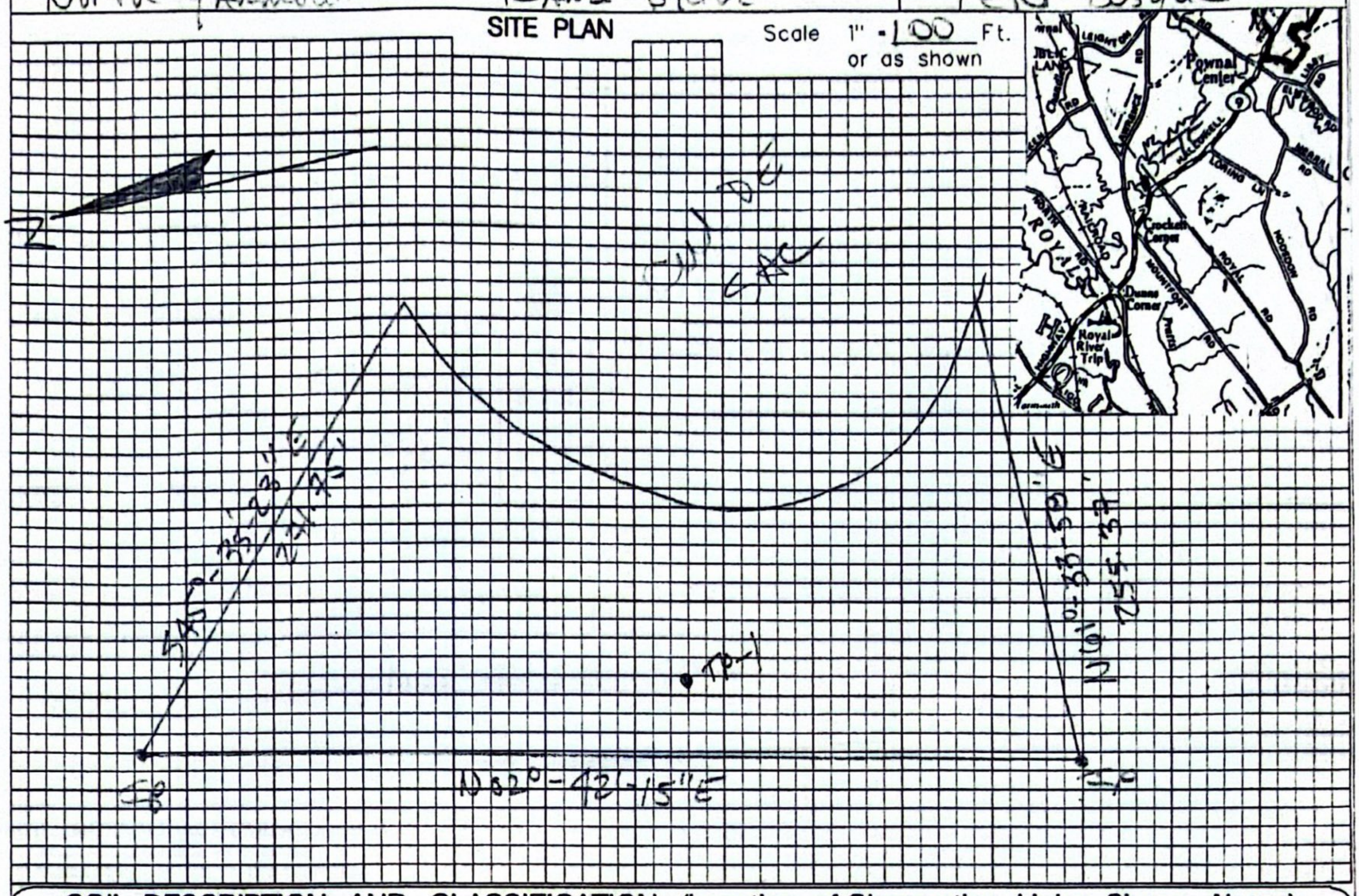

SOIL DESCRIPTION AND CLASSIFICATION (Location of Observation Holes Shown Above)

Observation Hole TP1 ■ Test Pit ☐ Boring
_____" Depth of Organic Horizon Above Mineral Soil

DEPTH BELOW MINERAL SOIL SURFACE (inches)	Texture	Consistency	Color	Mottling
0–10	Loamy SAND	Friable	DARK Brown	
10–30	SAND	Friable	Brown	
30–40	SAND	Friable	Olive	Common ? Distinct
40–50				

Soil Classification: Profile	Condition	Slope	Limiting Factor	
5	C	0 %	24"	■ Ground Water; ☐ Restrictive Layer; ☐ Bedrock; ☐ Pit Depth

Observation Hole _____ ☐ Test Pit ☐ Boring
_____" Depth of Organic Horizon Above Mineral Soil

DEPTH BELOW MINERAL SOIL SURFACE (inches)	Texture	Consistency	Color	Mottling
0–50				

Soil Classification: Profile	Condition	Slope	Limiting Factor	
		____ %	____"	☐ Ground Water; ☐ Restrictive Layer; ☐ Bedrock; ☐ Pit Depth

Site Evaluator Signature | 263 SE # | 10/30/98 Date

SUBSURFACE WASTEWATER DISPOSAL SYSTEM APPLICATION

98568

Town, City or Plantation: North Yarmouth

Street, Road or Subdivision: RAM DRIVE

Name of Owner: Peter Busque

SUBSURFACE WASTEWATER DISPOSAL PLAN

Scale: 1" = 40 Ft.

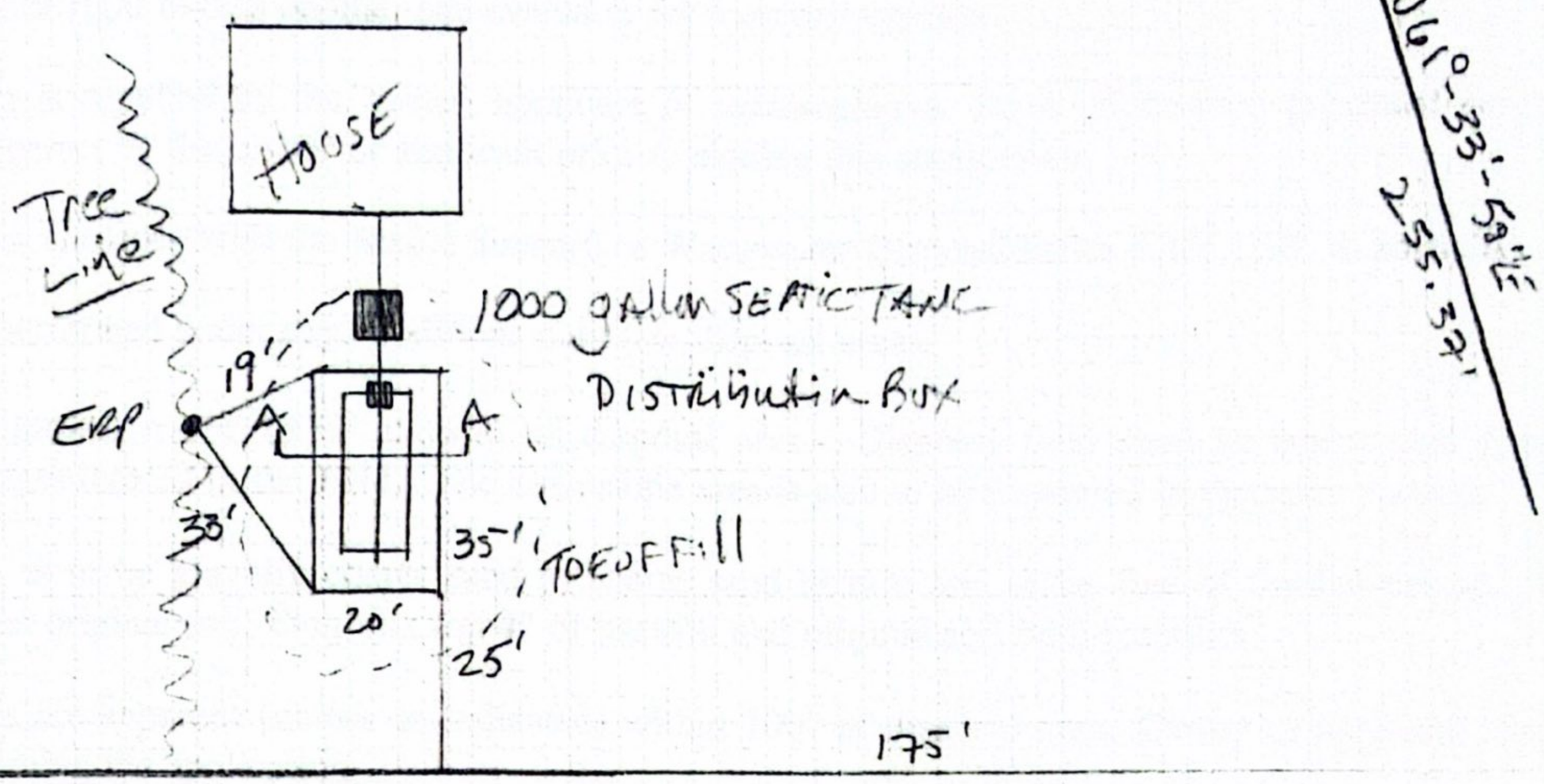

NOTE: MATERIALS AND INSTALLATION SHALL BE IN ACCORDANCE WITH MAINE SUBSURFACE WASTEWATER DISPOSAL RULES DATED 1/98, AS AMENDED, AND SUPPLEMENTED BY THE ATTACHED GENERAL NOTES WHICH BECOME A PART OF THIS DESIGN.

FILL REQUIREMENTS		CONSTRUCTION ELEVATIONS		ELEVATION REFERENCE POINT	
Depth of Fill (Upslope)	24"	Finished Grade Elevation	-35	Location & Description	DH 150' Up 5' Poplar
Depth of Fill (Downslope)	24"	Top of Distribution Pipe or Proprietary Device	-45	Reference & Elevation	0"
		Bottom of Disposal Area	-56		

DISPOSAL AREA CROSS SECTION

Scale:
Vertical: 1" = 3 Ft.
Scale: 1" = 5 Ft.

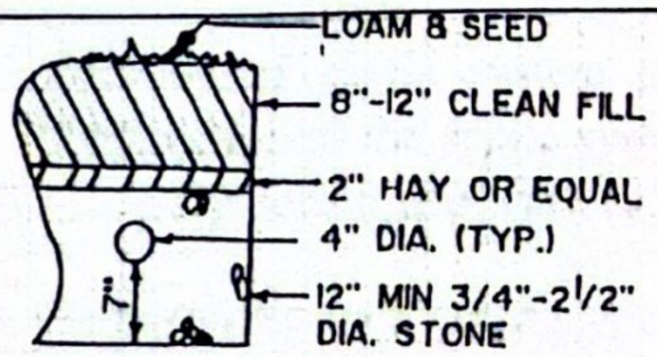

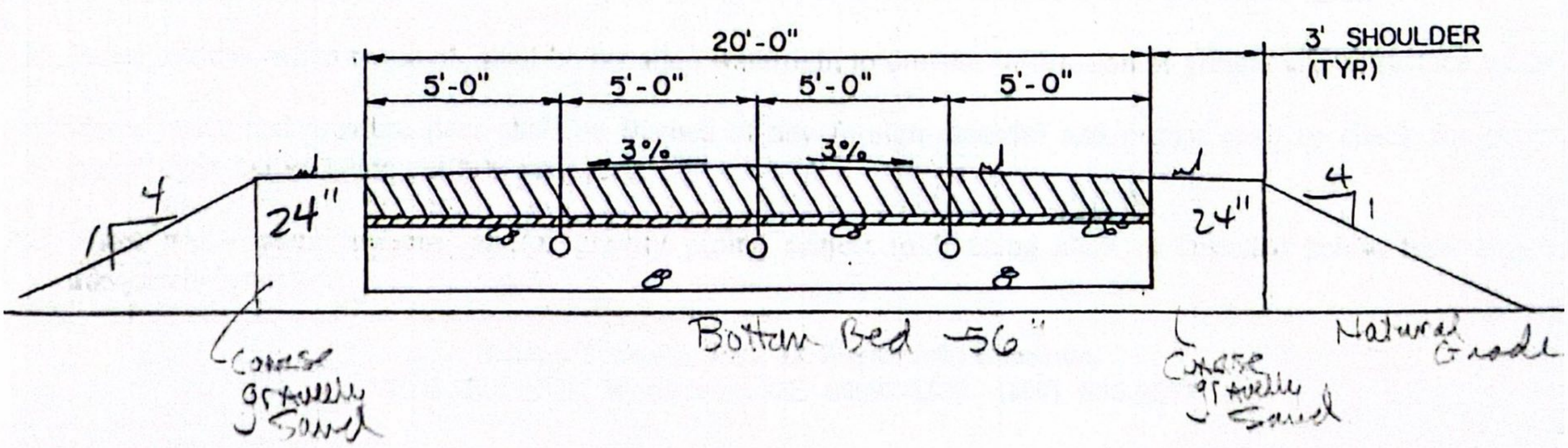

Mark Dunton — Site Evaluator Signature

263 — SE #

10/30/98 — Date

General Notes
(attachment to form HHE-200)

1. The nature of the site evaluation profession is one of interpretation of soil and site conditions. We, in the field, attempt to both provide a satisfactory service to the client, and comply by the rules by which we are bound - The Maine State Plumbing Code. If at any time you, the client, are not satisfied with the service provided or the results found, it is your right to hire another site evaluator for a second opinion.

2. Property information is supplied by the owner, applicant or representative. Such information presented herein shall be verified as correct by the owner or applicant prior to signing this application.

3. All work shall be in accordance with the Maine Subsurface Wastewater Disposal Rules dated 1/98, as amended.

4. All work should be performed under dry conditions only (for disposal area).

5. No vehicular or equipment traffic to be allowed on disposal area. Disposal field shall be constructed from outside the corner stakes located in the field. The downslope area is also to be protected in the same manner.

6. Backfill, if required, is to be gravelly coarse sand to coarse sand texture and to be free of foreign debris. If backfill is coarser than original soil, then mix top 4" of backfill and original soil with rototiller.

7. No neighboring wells are apparent (unless so indicated) within 100' of disposal area. Owner or applicant shall verify this prior to signing the application.

8. Minimum separation distances required (unless reduced by variance or special circumstance).

a) any well to disposal area:	100'
b) any well to septic tank:	100'
c) septic tank or disposal area to lake, river, stream or brook:	100' for major watercourse, 50' for minor water course
d) house to treatment tank:	8'
e) house to disposal area:	20'

Other separation distances per Plumbing Code.

9. Location of septic system near a wetland may require a separate permit. As such, the owner, prior to construction of the septic system, shall hire a professional to evaluate proximity of adjacent wetlands and prepare necessary permit applications.

10. Garbage disposals are not recommended and, if installed, are done so at the owner's risk. The additional waste load requires increased maintenance frequency, higher potential for failure, and larger septic tanks.

11. Pump stations, when required, shall be installed watertight to prevent infiltration of ground and/or surface water.

12. Force mains and pressure lines shall be flushed of any foreign material and pumps shall be check for proper on/off cycle before being put into service.

13. Force mains, pump stations, and/or gravity piping subject to freezing shall be installed below frost line or adequately insulated.

Sebago Technics, Inc., 12 Westbrook, Common,
P. O. Box 1339, Westbrook, ME 04098-1339 (207) 856-0277

Rev. 2/98