MOLINE LANE $250+$5 DEP=$265.00

SUBSURFACE WASTEWATER DISPOSAL SYSTEM APPLICATION

Maine Dept. of Health & Human Services
Div. Environmental Health, 11 SHS
(207) 287-2070 FAX (207) 287-4172

PROPERTY LOCATION

City, Town, or Plantation	LEVANT
Street or Road	PRIVATE DRIVE OFF UNION STREET
Subdivision, Lot #	

OWNER/APPLICANT INFORMATION

Name (last, first, MI): CALL COUNTRY LIVING ■ Owner ☐ Applicant

Mailing Address of ■ Owner ☐ Applicant	KEVIN CALL 4206 UNION STREET LEVANT, ME. 04456
Daytime Tel. #	(207) 991-2391

>> CAUTION: LPI APPROVAL REQUIRED <<

Town/City LEVANT Permit # 2392

Date Permit Issued 10/11/18 Fee $ 250.00 Double Fee Charged ( )

Local Plumbing Inspector Signature L.P.I. # 1124

Fee: $_____ state min. fee $_____ Locally adopted fee

Copy: ☐ Owner ☐ Town ☐ State

The Subsurface Wastewater Disposal System shall not be installed until a Permit is issued by the Local Plumbing Inspector. The Permit shall authorize the owner or installer to install the disposal system in accordance with the application and the Maine Subsurface Wastewater Disposal Rules.

Municipal Tax Map # _____ Lot # _____

OWNER OR APPLICANT STATEMENT

I state and acknowledge that the information submitted is correct to the best of my knowledge and understand that any falsification is reason for the Department and/or Local Plumbing Inspector to deny a permit.

X _____ _____
Signature of Owner or Applicant Date

CAUTION: INSPECTION REQUIRED

I have inspected the installation authorized above and found it to be in compliance with Subsurface Wastewater Disposal Rules Application. 10/11/18 (1st Date Approved)

Local Plumbing Inspector Signature 10/17/18 (2nd Date Approved)

PERMIT INFORMATION

TYPE OF APPLICATION

■ 1. First Time System
☐ 2. Replacement System
Type Replaced: _____
Year Installed: _____
☐ 3. Expanded System
☐ a. Minor Expansion <25%
☐ b. Major Expansion ≥ 25%
☐ 4. Experimental System
☐ 5. Seasonal Conversion

SIZE OF PROPERTY

_____ ☐ sq. ft.
3.1+ ■ acres

SHORELAND ZONING

☐ Yes ■ No

THIS APPLICATION REQUIRES

■ 1. No Rule Variance
☐ 2. First Time System Variance
☐ a. Local Plumbing Inspector Approval
☐ b. State & Local Plumbing Inspector Approval
☐ 3. Replacement System Variance
☐ a. Local Plumbing Inspector Approval
☐ b. State & Local Plumbing Inspector Approval
☐ 4. Minimum Lot Size Variance
☐ 5. Seasonal Conversion Permit

DISPOSAL SYSTEM TO SERVE

☐ 1. Single Family Dwelling Unit, No. of Bedrooms: ____
■ 2. Multiple Family Dwelling , No. of Units: 2
☐ 3. Other: (SPECIFY) _____
Current Use: ☐ Seasonal ■ Year Round ☐ Undeveloped

DISPOSAL SYSTEM COMPONENT(S)

■ 1. Complete Non-engineered System
☐ 2. Primitive System (graywater & alt. toilet)
☐ 3. Alternative Toilet, specify: _____
☐ 4. Non-engineered Treatment Tank (only)
☐ 5. Holding Tank, _____ gallons
☐ 6. Non-engineered Disposal Field (only)
☐ 7. Separated Laundry System
☐ 8. Complete Engineered System(2000 gpd or more)
☐ 9. Engineered Treatment Tank (only)
☐ 10. Engineered Disposal Field (only)
☐ 11. Pre-treatment, specify: _____
☐ 12. Miscellaneous components

TYPE OF WATER SUPPLY

■ 1. Drilled Well ☐ 2. Dug Well ☐ 3. Private
☐ 4. Public ☐ 5. Other: _____

DESIGN DETAILS (SYSTEM LAYOUT SHOWN ON PAGE 3)

TREATMENT TANK

■ 1. Concrete
■ a. Regular OR
■ b. Low Profile
☐ 2. Plastic
☐ 3. Other: _____
CAPACITY 1500 gallons

DISPOSAL FIELD TYPE & SIZE

■ 1. Stone Bed ☐ 2. Stone Trench
☐ 3. Proprietary Device _____
☐ a. Cluster Array ☐ c. Linear
☐ b. Regular load ☐ d. H-20 load
☐ 4. Other: _____
SIZE 1200 ■ sq. ft. ☐ lin. ft.

GARBAGE DISPOSAL UNIT

■ 1. No ☐ 2. Yes ☐ 3. Maybe
If Yes or Maybe, specify one below:
☐ a. Multi-compartment Tank
☐ b. _____ Tanks in Series
☐ c. Increase in Tank Capacity
☐ d. Filter on Tank Outlet

DESIGN FLOW

360 gallons per day
BASED ON
■ 1. Table 4A (dwelling unit(s)
☐ 2. Table 4C (other facilities)
SHOW CALCULATIONS for other facilities
☐ 3. Section 4G (meter readings)
ATTACH WATER METER DATA

SOIL DATA & DESIGN CLASS

PROFILE CONDITION
3 / B
at Observation Hole # 1
Depth 50 "
OF MOST LIMITING SOIL FACTOR

DISPOSAL FIELD SIZING

☐ 1. Medium – 2.6 sq. ft./gpd
■ 2. Medium-Large – 3.3 sq. ft./gpd
☐ 3. Large – 4.1 sq. ft./gpd
☐ 4. Extra Large – 5.0 sq. ft./gpd

EFFLUENT/EJECTOR PUMP

■ 1. Not Required
☐ 2. May be Required
☐ 3. Required
Specify only for engineered systems
DOSE: _____ gallons

LATTITUDE AND LONGITUDE

at center of disposal area
Lat. 44°d 53'm 20.8"s N
Lon. 68°d 59'm 29.5"s W
if g.p.s., state margin of error 30'±

SITE EVALUATOR STATEMENT

I certify that on 9-27-17 (date) I completed a site evaluation on this property and state that the data reported are accurate and that the proposed system is in compliance with the State of Maine Subsurface Wastewater Disposal Rules (10-144A CMR 241).

_____ 117 10-3-17
Site Evaluator Signature SE# Date

RICHARD BABINE (207) 852-7898 _____
Site Evaluator Name Printed Telephone Number E-mail Address

Note: Changes to or deviations from the design should be confirmed with the Site Evaluator.

SUBSURFACE WASTEWATER DISPOSAL SYSTEM APPLICATION

Maine Dept. of Health & Human Services
Division of Environmental Health, 11 SHS
(207) 287-2070 FAX (207) 287-4172

Town, City, Plantation: LEVANT

Street, Road, Subdiviision: PRIVATE DRIVE OFF UNION STREET

Owner or Applicant Name: CALL COUNTRY LIVING

SITE PLAN

Scale 1" = 30 Ft.

SITE LOCATION PLAN
(Attach map from Maine Atlas for First Time System Variance)

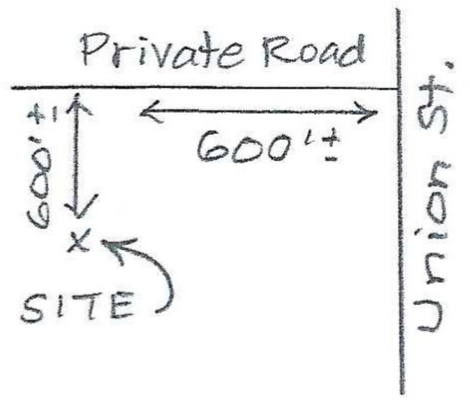

SOIL PROFILE DESCRIPTION AND CLASSIFICATION (Location of Observation Holes Shown Above or on pg. 2A)

Observation Hole # 1 ■ Test Pit ☐ Boring

1/2 " Depth of organic horizon above mineral soil

DEPTH BELOW MINERAL SOIL SURFACE (inches)	Texture	Consistency	Color	Mottling
0–10	LOAM		BROWN	
10–20	FINE SANDY LOAM	FRIABLE	RED BROWN TO YELLOW	NONE
20–30				
30–40		FIRM	TO OLIVE	EVIDENT
40–50				

Soil Classification		Slope	Limiting Factor	
3 (Profile)	C (Condition)	0 %	50" (Depth)	☐ Ground Water ☐ Restrictive Layer ☐ Bedrock ■ Pit Depth

Observation Hole # _____ ☐ Test Pit ☐ Boring

_____ " Depth of organic horizon above mineral soil

DEPTH BELOW MINERAL SOIL SURFACE (inches)	Texture	Consistency	Color	Mottling
0–10				
10–20				
20–30				
30–40				
40–50				

Soil Classification		Slope	Limiting Factor	
(Profile)	(Condition)	%	" (Depth)	☐ Ground Water ☐ Restrictive Layer ☐ Bedrock ☐ Pit Depth

Site Evaluator's Signature

117 S. E. #

10-3-17 Date

Town, City, Plantation	Street, Road, Subdivision	Owner or Applicant Name
LEVANT	PRIVATE DRIVE OFF UNION STREET	CALL COUNTRY LIVING

SITE PLAN:

SCALE: 1" = 30 FT.

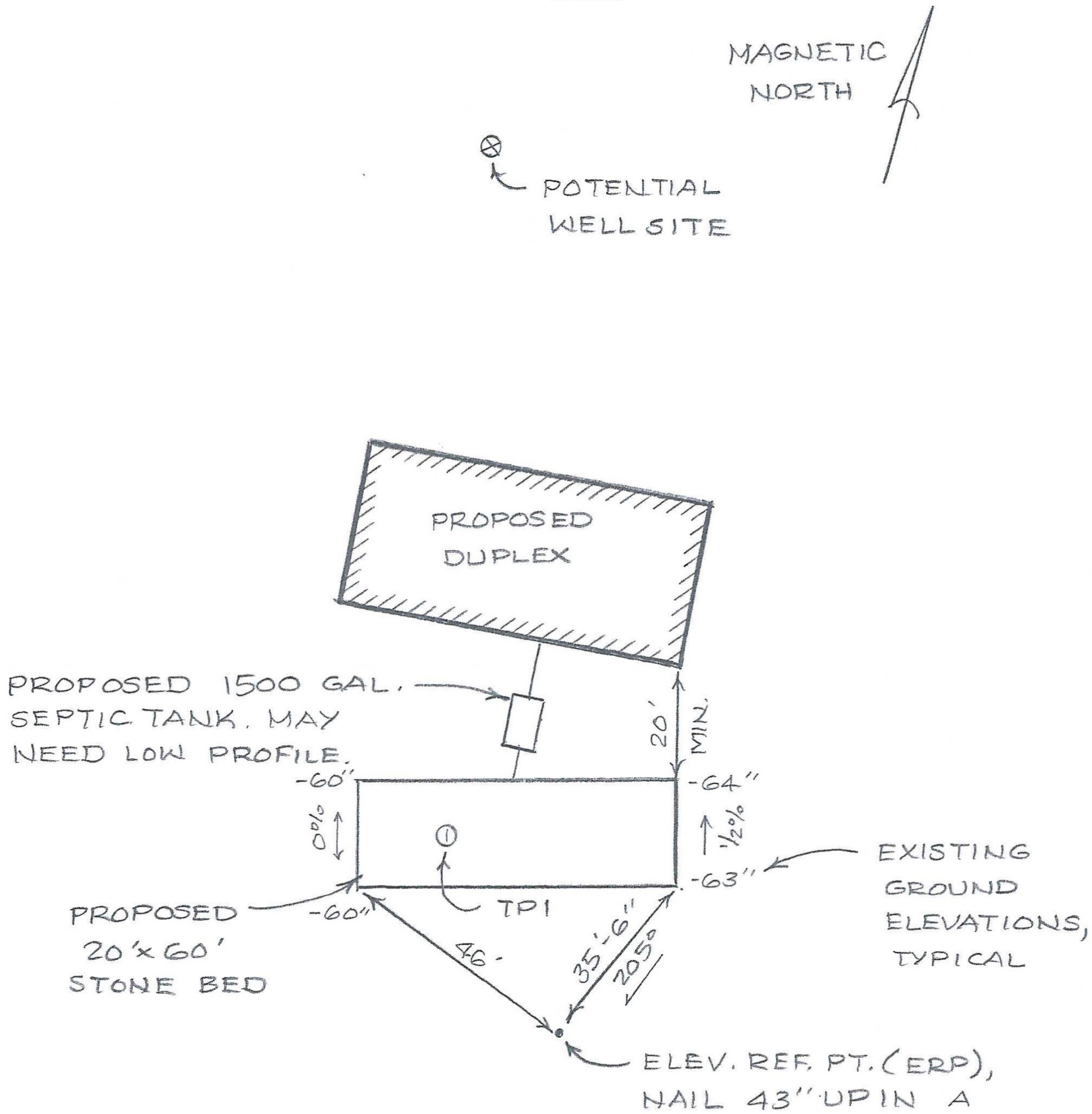

Site Evaluator's Signature

117
S.E. #

10-3-17
Date

SUBSURFACE WASTEWATER DISPOSAL SYSTEM APPLICATION

Maine Dept. of Health & Human Services
Division of Environmental Health, 11 SHS
(207) 287-2070 FAX (207) 287-4172

Town, City, Plantation	Street, Road, Subdivision	Owner or Applicant Name
LEVANT	PRIVATE DRIVE OFF UNION STREET	CALL COUNTRY LIVING

SUBSURFACE WASTEWATER DISPOSAL PLAN

SCALE: 1" = 20 FT.

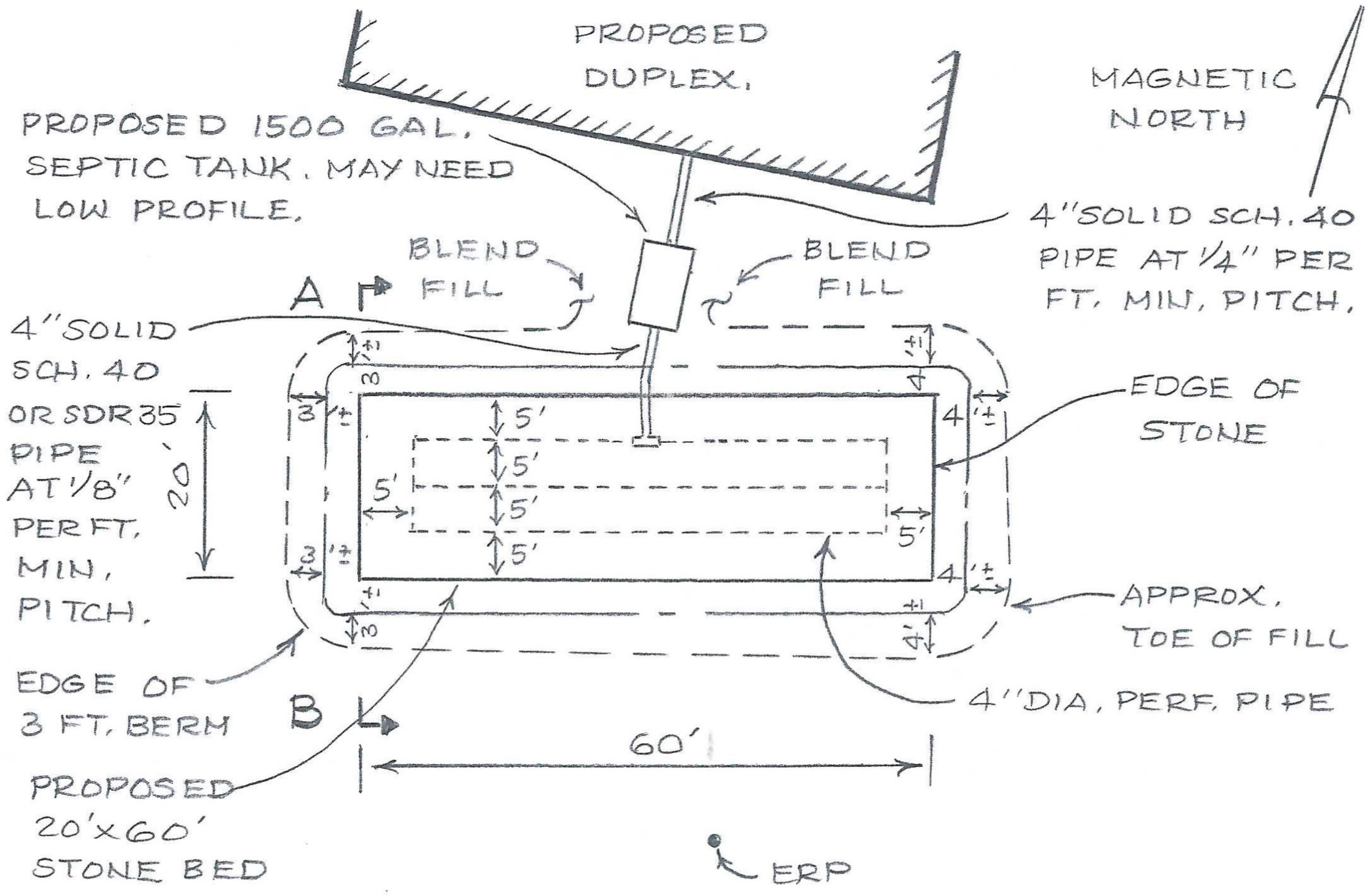

FILL REQUIREMENTS		CONSTRUCTION ELEVATIONS	SYSTEM:	PRIVY:	ELEVATION REFERENCE POINT
Depth of Backfill (Upslope)	8"	Finished Grade Elevation	MIN. -52"		Location & Description NAIL
Depth of Backfill (Downslope)	11"-12"	Top of Distribution Pipe or Proprietary Device	-65"	N/A	43" ABOVE GROUND IN A 10" DIA. FIR TREE.
Depths @ cross-section shown below or on X-sec. detail.		Bottom of Disposal Field	-76"		Reference Elevation is: 0"

DISPOSAL AREA CROSS SECTION (SEE ATTACHED CROSS SECTION A - B)

NOTES:

1. DIVERT SURFACE WATER AND GROUND WATER AWAY FROM THE DISPOSAL SYSTEM.
2. CHECK THE SEPTIC TANK AT LEAST EVERY TWO YEARS FOR PUMPING.
3. GARBAGE DISPOSALS ARE NOT RECOMMENDED.
4. WELL CAN BE 50'+ FROM SEPTIC TANK AND 100' MINIMUM FROM LEACHFIELD.
5. BUILDING FOUNDATION TO BE AT LEAST 20' MINIMUM FROM LEACHFIELD AND SLAB TO BE AT LEAST 15' MINIMUM FROM LEACHFIELD.
6. PROTECT ALL PIPING FROM FROST.

Site Evaluator's Signature	S.E. #	Date
	117	10-3-17

BED CROSS - SECTION

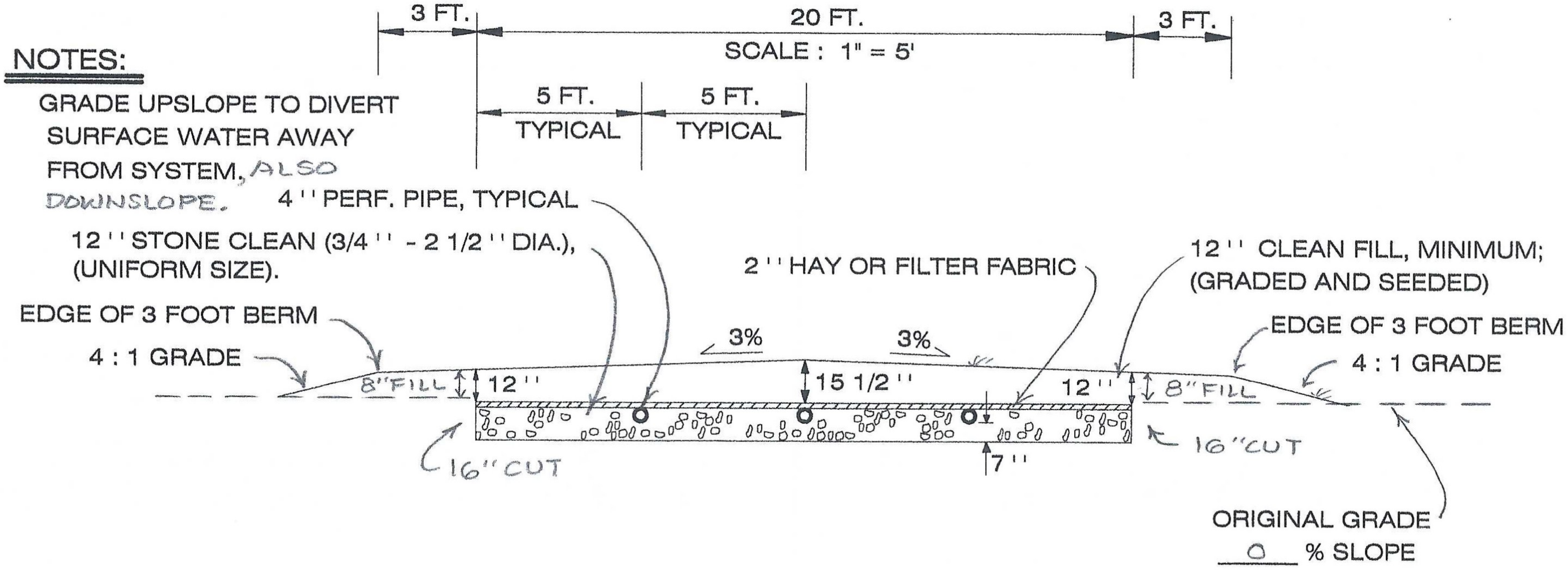

NOTES:

GRADE UPSLOPE TO DIVERT SURFACE WATER AWAY FROM SYSTEM, ALSO DOWNSLOPE.

NOTES:

1. REMOVE THE VEGETATION AND SCARIFY THE AREA BENEATH SYSTEM AND FILL EXTENSIONS.
2. INSTALL COARSE SAND TO GRAVELLY COARSE SAND IN 8" LIFTS, COMPACT USING A SMALL DOZER.
3. KEEP THE BOTTOM OF THE BED LEVEL.
4. THE TOP 4 '' OF THE CLEAN FILL WILL CONSIST OF SOIL AMENDMENT MIX, SUITABLE FOR ESTABLISHMENT OF A VEGETATIVE COVER. THIS WILL BE PLACED OVER THE SYSTEM INCLUDING FILL EXTENSIONS.
5. PROTECT ALL PIPING FROM FROST.

ELEVATIONS:

ELEV. REF. PT.: 0"

FINISHED GRADE: -52" MIN.

TOP OF DISTRIBUTION PIPE: -65"

BOTTOM OF BED: -76"

OWNER: CALL COUNTRY LIVING

LOCATION: LEVANT

RICHARD BABINE | S.E. # 117 | DATE 10-3-17