136 BOG ROAD

Location	136 BOG ROAD	**Mblu**	0090/ 0071/ / /
Acct#	002482	**Owner**	FOSTER PAULA J/TERESA I
Total Market Va...	$515,000	**Appraisal**	$515,000
PID	2426		

Current Value

Appraisal			
Valuation Year	**Improvements**	**Land**	**Total**
2026	$324,600	$190,400	$515,000
Assessment			
Valuation Year	**Improvements**	**Land**	**Total**
2026	$324,600	$190,400	$515,000

Owner of Record

Owner	FOSTER PAULA J/TERESA I	Sale Price	$0
Co-Owner		Book & Page	17061/0456
Address	136 BOG RD YORK, ME 03909	Sale Date	07/15/2015

Ownership History

Ownership History			
Owner	**Sale Price**	**Book & Page**	**Sale Date**
FOSTER PAULA J/TERESA I	$0	17061/0456	07/15/2015
FOSTER PAUL E	$0	16721/0026	10/24/2013
FOSTER PAUL E/PATRICIA I	$0	1522/0479	01/01/1900

Building Information

Building 1 : Section 1

Year Built:	1880
Living Area:	2,360
Replacement Cost:	$470,356
Building Percent Good:	68
Replacement Cost Less Depreciation:	$319,800

Building Attributes

Field	Description
Style:	Cape Cod
Model	Residential
Grade:	C-
Stories:	1 3/4 Stories
Occupancy	1
Exterior Wall 1	Clapboard
Exterior Wall 2	Wood Shingle
Roof Structure:	Gable/Hip
Roof Cover	Asph/F Gls/Cmp
Interior Wall 1	Plastered
Interior Wall 2	Drywall/Sheet
Interior Flr 1	Carpet
Interior Flr 2	Inlaid Sht Gds
Heat Fuel	Oil
Heat Type:	Forced Air-Duc
AC Type:	None
Total Bedrooms:	3 Bedrooms
Total Bthrms:	1
Total Half Baths:	1
Total Xtra Fixtrs:	
Total Rooms:	6 Rooms
Bath Style:	Average
Kitchen Style:	Average
Landscaping	
Driveway	

Building Photo



(/photos/YorkMEPhotos//\00\00\00\14.jpg)

Building Layout

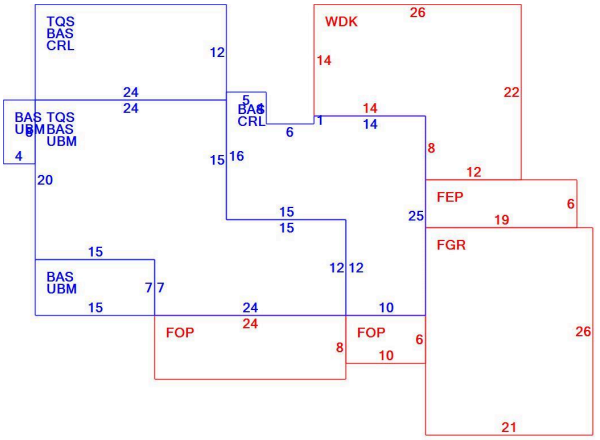

(ParcelSketch.ashx?pid=2426&bid=2426)

Building Sub-Areas (sq ft)			Legend
Code	**Description**	**Gross Area**	**Living Area**
BAS	FIRST FLOOR	1,602	1,602
TQS	THREE QUARTER STORY	1,011	758
CRL	BSMT CRAWL	742	0
FEP	PORCH, ENCLOSED FINISH	114	0
FGR	GARAGE, ATTACHED	546	0
FOP	PORCH, OPEN	252	0
UBM	BASEMENT, UNFINISHED	860	0
WDK	DECK, WOOD	460	0
		5,587	2,360

Extra Features

Extra Features				Legend
Code	**Description**	**Size**	**Value**	**Bldg #**
FPL1	FIREPLACE 1 ST	1.00 UNITS	$2,200	1

Land

Land Use

Use Code	1010
Description	Single Fam MDL-01
Zone	
Neighborhood	300
Alt Land Appr	No
Category	

Land Line Valuation

Size (Acres)	1
Frontage	
Total Market Land	$190,400
Appraised Value	$190,400

Outbuildings

Outbuildings						Legend
Code	**Description**	**Sub Code**	**Sub Description**	**Size**	**Value**	**Bldg #**
SHD1	SHED FRAME AVR			144.00 S.F.	$1,400	1
SPL4	ABV GRD POOL			24.00 DIA	$1,200	1

Valuation History

Appraisal			
Valuation Year	**Improvements**	**Land**	**Total**
2026	$324,600	$190,400	$515,000
2025	$324,600	$171,300	$495,900
2024	$291,000	$171,300	$462,300
2023	$291,000	$126,900	$417,900

Assessment			
Valuation Year	**Improvements**	**Land**	**Total**
2026	$324,600	$190,400	$515,000
2025	$324,600	$171,300	$495,900
2024	$291,000	$171,300	$462,300
2023	$291,000	$126,900	$417,900

(c) 2026 Vision Government Solutions, Inc. All rights reserved.